The Practice of
Applied Statics

MET 111

V.S. Hillsman, P.E.
Associate Professor

Department of
Mechanical Engineering Technology
Purdue University
West Lafayette, Indiana

Copyright (©) May 2010
First Edition

Revised - August, 2012

TABLE OF CONTENTS – THE PRACTICE OF APPLIED STATICS

Chapter:

Forward i
Course Introduction ii
1 Review of Trigonometry and Unit Conversion 1-1
2 Forces, Force Systems, and Summation of Forces 2-1
3 Static Equilibrium of Concurrent Coplanar force systems 3-1
4 Moment Produced by a Force; Varigon's Theorem 4-1
5 Static Equilibrium of Non-Coplanar Systems 5-1
6 Couples 6-1
7 Equivalent Force Systems 7-1
8 Support Reactions and Free Body Diagrams 8-1
9 Centroids of Plane Areas 9-1
10 Distributed Loads and Beams 10-1
11 Machines and Frames 11-1
12 Truss Analysis 12-1
13 Internal Reactions in Structural Members 13-1
14 Internal Reactions; Load-Shear-Bending Moment Diagrams 14-1
15 Static Dry Friction 15-1
16 Three-Dimensional (3-D) Topics 16-1
17 Pulleys and Pulley Systems 17-1

APPENDICES

Unit Equivalence

A1 Common Unit Equivalences

Structural Shapes – areas, centroids, dimensions

B1 Wide-Flange Beams
B2 Standard I-Beams
B3 Channels
B4 Angles
B5 Pipes
B6 Square Tubing
B7 Rectangular Tubing

FORWARD

The title of this manual - **THE PRACTICE OF APPLIED STATICS** - represents not just the subject (Statics), but also some views/ideas about learning this subject.

The correct and efficient solution of Statics problems is a ***skill***; procedures to help you develop this skill are presented in this manual. Your knowledge of the content (Statics), **and the skill with which you use the content**, will be extremely important in your subsequent engineering mechanics courses and in your professional career.

The word *practice* can be defined as "the repeated performance of an activity in order to learn or perfect a skill", or "proficiency gained through repeated exercise". This does not mean that you will be solving the same problem repeatedly. Rather, you will need to *practice* specific solution procedures on many problems that may look very similar (but in reality can be very different). You will need to *repeatedly perform* (practice) any given solution procedure to develop the necessary skill for its correct use.

The word *practice* can also be defined as "the business of a professional person", such as a professional who practices law, medicine, dentistry or engineering. This definition of practice applies to your course instructors; their practice is the business of helping you learn the knowledge and skills that will be required for your success in not just this course, but in subsequent courses and ultimately in your professional career - the *practice of statics* may then become part of *your* professional career.

The word *applied* can be defined as "put into practice; used". The information and solution procedures contained in this manual are meant to be practiced, meant to be used. Acquiring the problem solving skills necessary for your further development **requires** that you **practice** the procedures in this manual. With sufficient practice, you can develop the skill necessary to correctly and efficiently use the information and solution procedures.

So - **THE PRACTICE OF APPLIED STATICS** – means exactly that. Practice, practice, (and maybe some more practice); only through practice can you develop the skills necessary for Applied Statics.

FINAL THOUGHT:

The solution procedures included in this manual are not the only procedures available for solving Statics problems (there are *many* others), but are procedures that seem to work well when initially developing the necessary, required skills. After you have developed these skills, you should then be able to evaluate and use solution methods found in other reference materials.

STATICS

Statics is the branch of engineering mechanics that deals with objects at rest, and the effects of forces acting on these objects. An object can be many things, from a 10 pound box of nails sitting on a workbench to a bridge truss that supports a railroad over a river. The object could be the entire truss, or one individual member from the truss, or one pin that connects two (or more) truss members. In many cases, deciding exactly what part or parts of an object to analyze represents the first step in the solution of a Statics problem.

The study of engineering mechanics is based on Newton's three Laws of Motion, and Statics is particularly concerned with the 1st and 3rd laws:

1st Law: An object will remain at rest unless acted upon by an unbalanced force.

3rd Law: To every action, there is an equal and opposite reaction.

So, how do the 1st and 3rd laws apply to a typical Statics problem? Let's say that you are trying to move your refrigerator. You push on the refrigerator as hard as possible at shoulder height (Figure 1) and it does not move at all! One of three things could have happened: it could have slid, tipped over, or remained completely at rest. You applied what you thought was an unbalanced force, but the refrigerator remained at rest. For the 1st law to be correct (object will remain at rest...) the "unbalanced" force that you applied was actually balanced due to the 3rd law, as shown in Figure 2. The friction force, F, keeps the refrigerator from sliding, and is equal and opposite to your applied force. The downward force due to the weight balances the tendency for the refrigerator to pivot about corner A and tip over. There was equal and opposite reaction to your action, which confirms the 3rd law and the refrigerator remains at rest since your original action (push) was not unbalanced.

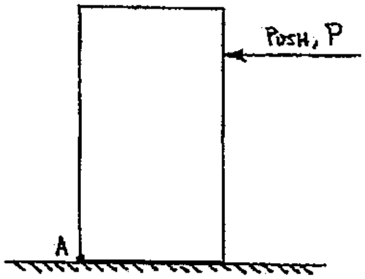

FIGURE 1

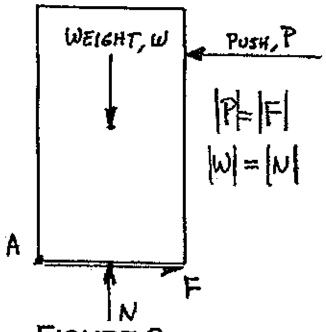

FIGURE 2

If a force is applied to an object, but the object remains at rest, it is said to be in **static equilibrium**. The solution of Statics problems assumes that the object must be in equilibrium due to some combination of actions and reactions.

All objects evaluated in Statics problems are also assumed to be rigid bodies. This allows the effects of applied forces to be established while neglecting any deformations caused by the applied forces.

The solution of Statics problems will consistently require skill in four basic problem solving techniques:

1. Construction of complete, analytical diagrams
2. Summation of forces
3. Summation of moments
4. Application of the principle of static equilibrium

This page intentionally left blank.

CHAPTER 1: REVIEW OF TRIGONOMETRY AND UNIT CONVERSION

Problem solving techniques in this course rely heavily on algebra, geometry, and trigonometry. Although all of your prior math skills and knowledge will be required for this course, trigonometry is especially important since one of the most common structural elements is the triangle. This review concentrates on the aspects of trigonometry most often used in the solution of Statics problems that involve triangles. A brief review of unit conversion is also included in this chapter.

TRIANGLES:

A triangle is defined as the closed figure formed by the connection of three finite line segments. Figure 1-1 presents the geometric names given to various triangles. Since each side of a scalene triangle has a different length, none of the interior angles will have the same magnitude. If two sides of a triangle have equal lengths (isosceles), then the interior angles opposite those sides will have equal magnitude. Equilateral triangles have three sides of equal length, so their interior angles all have equal magnitudes. However, ***the sum of the three interior angles of any triangle will always be equal to 180^0.***

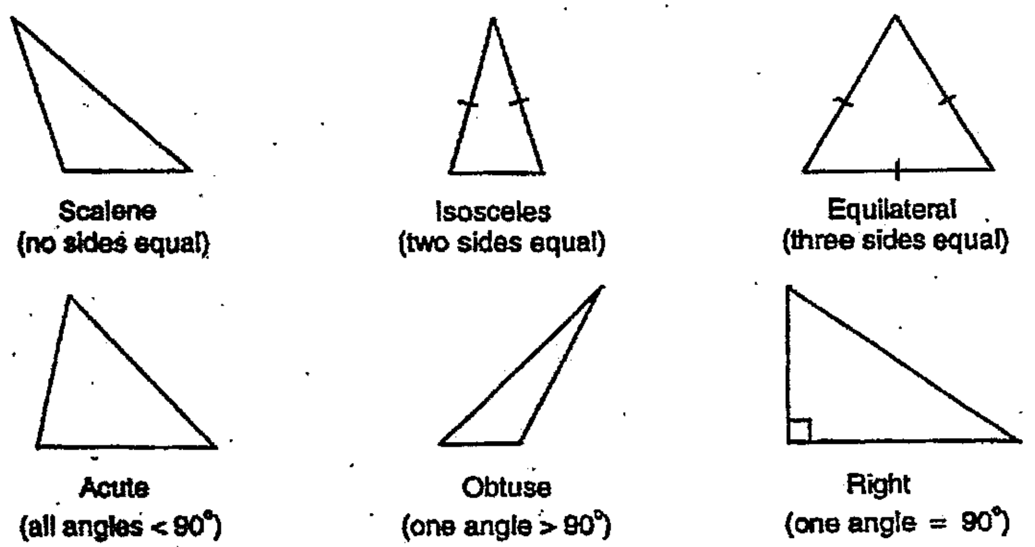

FIGURE 1-1: Geometric names of triangles

One method for annotating a triangle is shown in Figure 1-2. Greek letters are normally used for angles, with the sides dimensioned as shown. Many additional methods for annotating triangles can be found in other reference materials, however, the method shown in Figure 1-2 will be used in this manual. Ultimately, the most important aspect of annotating triangles is not the type of symbol used, but the consistent practice of using symbols to identify sides and angles on your diagrams, and then using the same symbols in any algebraic development of a problem solution.

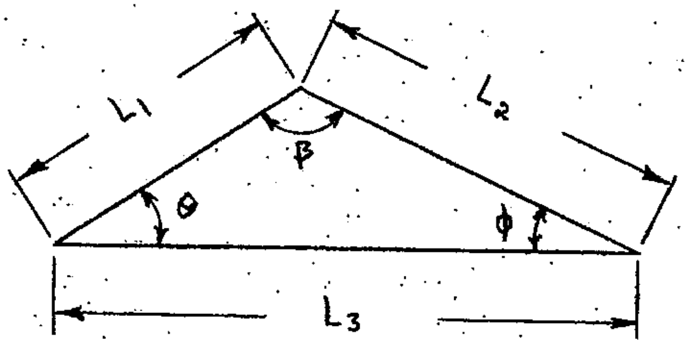

FIGURE 1-2: Typical method of annotating triangles

RIGHT TRIANGLES AND THE PYTHAGOREAN THEOREM

The triangle shown in Figure 1-3 is a ***right triangle***, since sides L_1 and L_2 form a 90^0 angle (as shown by the symbol for perpendicular used at the intersection of side L_1 and side L_2).

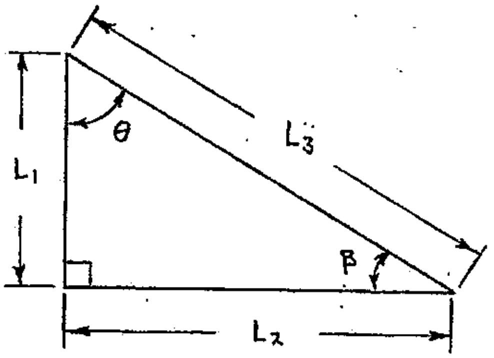

FIGURE 1-3: Right triangle

The relationship among the three sides of a right triangle is expressed in the classic ***Pythagorean Theorem*** which states:

> *The sum of the squares of the two perpendicular sides of a right triangle is equal to the square of the length of the hypotenuse.*

For the right triangle shown in Figure 1-3, this can be expressed algebraically as:

$$L_3^2 = L_1^2 + L_2^2$$

$$L_3 = \sqrt{L_1^2 + L_2^2}$$

The trig functions for angle θ of the right triangle shown in figure 1-3 can be expressed as follows:

$$\sin\theta = \frac{\text{opposite}}{\text{hypotenuse}} = \frac{L_2}{L_3}$$

$$\cos\theta = \frac{\text{adjacent}}{\text{hypotenuse}} = \frac{L_1}{L_3}$$

$$\tan\theta = \frac{\text{opposite}}{\text{adjacent}} = \frac{L_2}{L_1}$$

The trig functions for the other angles are found using similar relationships.

<u>INVERSE FUNCTIONS OF ANGLES</u>

Inverse functions, also called arc functions, relate a given function value to a specific angle. For example, since $\sin 45^0 = 0.7071$, you could also state that 45^0 is the angle for which the sine is equal to 0.7071. Expressed algebraically, where θ is the symbol used for an unknown angle:

$\sin\theta = 0.7071$

$\theta = \sin^{-1}(0.7071)$ or $\theta = \arcsin(0.7071)$

$\theta = \underline{\underline{45^0}}$

When calculating the magnitudes of angles using trig functions, the arc function is a specific step in the problem solution and must be shown as part of a **complete** solution (as shown in Example 1-1).

Law of Sines and Law of Cosines

The ***Law of Sines*** and the ***Law of Cosines*** express the relationships among the sides and angles of ***any*** triangle, so the scalene triangle shown in Figure 1-2 (pg. 1-2) will be used to help define these laws.

Law of Sines

The Law of Sines can be generally stated as:

$$\frac{\text{length of one side}}{\text{sine of the angle opposite that side}} = \frac{\text{length of another side}}{\text{sine of the angle opposite that other side}}$$

Or, based on the notation of the triangle shown in Figure 1-2:

$$\frac{L_1}{\sin\phi} = \frac{L_2}{\sin\theta} = \frac{L_3}{\sin\beta}$$

The Law of Sines can also be stated as follows, since each term represents a ratio between the length of a side and the sine of its corresponding opposite angle:

$$\frac{\sin\phi}{L_1} = \frac{\sin\theta}{L_2} = \frac{\sin\beta}{L_3}$$

For angles between 0^0 and 180^0, the magnitude of the sine function will always be positive. However, the magnitude of the sine function increases from zero (0) at 0^0 to a maximum of 1.000 at 90^0. The magnitude of the sine function ***then decreases*** from a magnitude of 1.000 at 90^0 back to zero at 180^0. So, when using the Law of Sines, the sine function will not indicate whether an angle is greater than or less than 90^0. In fact, the sine function will return identical values for supplementary angles (two angles whose sum is 180^0) as shown below:

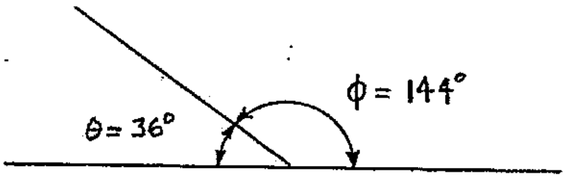

$\sin 36^0 = 0.5878$ ***and*** $\sin 144^0 = 0.5878$

Most calculators will return the angle less than 90^0 when using the arcsin function on a positive number between zero (0) and 1.000. So, if you had an unknown angle where $\sin\theta = 0.5878$, a calculator would probably return a value of $\theta = 36^0$. However, the actual solution value could be either θ or $(180^0 - \theta)$. Caution is advised when using the Law of Sines to solve for an obtuse angle in a scalene triangle, as shown in Example 1-1 on the following page.

Example 1-1: Using the Law of Sines, calculate the magnitude of angle β (degrees) for the triangle shown below.

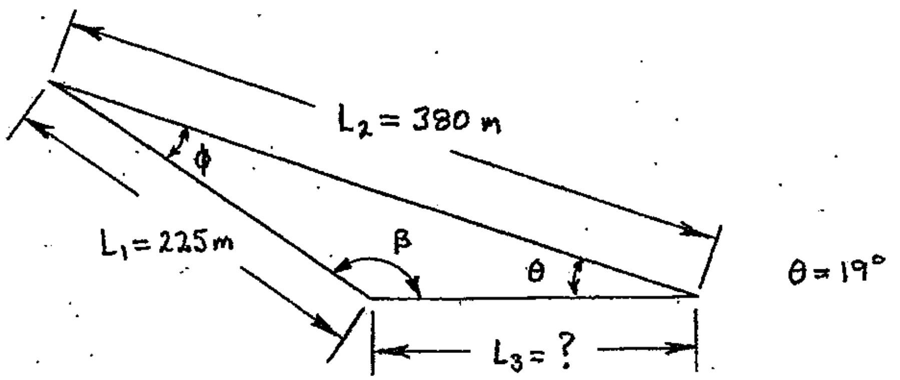

From the Law of Sines:

$$\frac{\sin\beta}{L_2} = \frac{\sin\theta}{L_1}$$

$$\sin\beta = \left(\frac{L_2}{L_1}\right)\sin\theta$$

$$\beta = \sin^{-1}\left(\frac{L_2}{L_1}\right)\sin\theta$$

$$\beta = \sin^{-1}\left(\frac{380\text{m}}{225\text{m}}\right)(\sin 19^0) = 33.3566^0$$

$$\beta = \underline{\underline{33.36^0}} \qquad \text{(to 4 significant figures)}$$

However, β = 33.36⁰ is clearly **not** the magnitude of angle β in the triangle above!

Remember: When using the arcsin function on a positive number between zero and 1.000, there are two possible solutions; θ or (180⁰ - θ). It is obvious from the diagram above that β = 33.36⁰ is not correct, so the solution must then be:

$$\beta = 180^0 - 33.3356^0 = 146.6434^0$$

$$\beta = \underline{\underline{146.6^0}}$$

An accurately scaled drawing is **very** helpful for a problem of this type! Also, if the data are available, always use the Law of Cosines when solving for an obtuse angle. An obtuse angle, if present, will always be opposite the longest side of a triangle. If the Law of Sines must be used, always solve for an obvious acute angle first.

LAW OF COSINES

The Law of Cosines can be used for any triangle as long as the lengths of two sides are known, along with the value of the angle between the two known sides. The Law of Cosines can be stated as follows:

> *The square of the unknown side of any triangle is equal to the square of one known side summed with the square of the other known side, minus the following quantity: (2 multiplied by the first known side, multiplied by the second known side, multiplied by the cosine of the angle between the two known sides).*

Using the Law of Cosines, equations can be developed to solve for any unknown side of the triangle shown below:

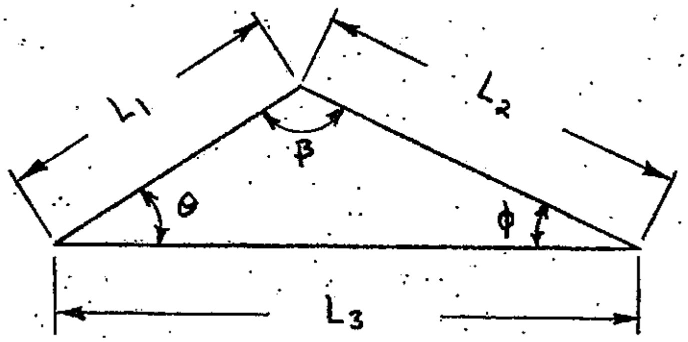

$$L_1^2 = L_2^2 + L_3^2 - 2L_2L_3(\cos\phi)$$
$$L_2^2 = L_1^2 + L_3^2 - 2L_1L_3(\cos\theta)$$
$$L_3^2 = L_1^2 + L_2^2 - 2L_1L_2(\cos\beta)$$

The Law of Cosines can also be used to solve for unknown angles if all sides of a triangle are known. The first equation from the list above could be rearranged to solve for angle ϕ:

$$L_1^2 = L_2^2 + L_3^2 - 2L_2L_3(\cos\phi)$$
$$2L_2L_3(\cos\phi) = L_2^2 + L_3^2 - L_1^2$$
$$\cos\phi = \frac{L_2^2 + L_3^2 - L_1^2}{2L_2L_3}$$
$$\phi = \cos^{-1}\left(\frac{L_2^2 + L_3^2 - L_1^2}{2L_2L_3}\right)$$

Similar equations could also be developed for angles θ and β.

Specification of Line Directions in Technical Problems

The direction of a line can be specified by using the angle measured between the line and some known reference, such as a horizontal or vertical line. Angle specifications of this type are shown in Figure 1-4.

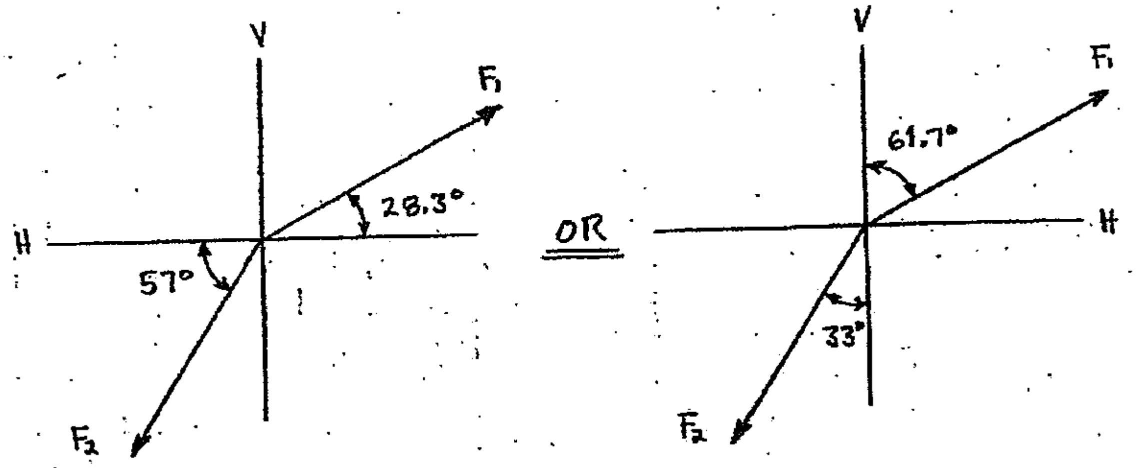

Figure 1-4: Angle measurements used to specify direction

The direction of a line can also be specified based on its slope (see Figure 1-5). The rise and run of the line are shown as the perpendicular sides of a right triangle that uses the given line as the hypotenuse of the right triangle. The rise and run sides are parallel to corresponding sides of some known perpendicular reference axes. The triangle used to show the rise and run is called a "slope triangle". Slope triangles are very common in Engineering Mechanics, and their proper use can help streamline the solution of many problems involving triangles.

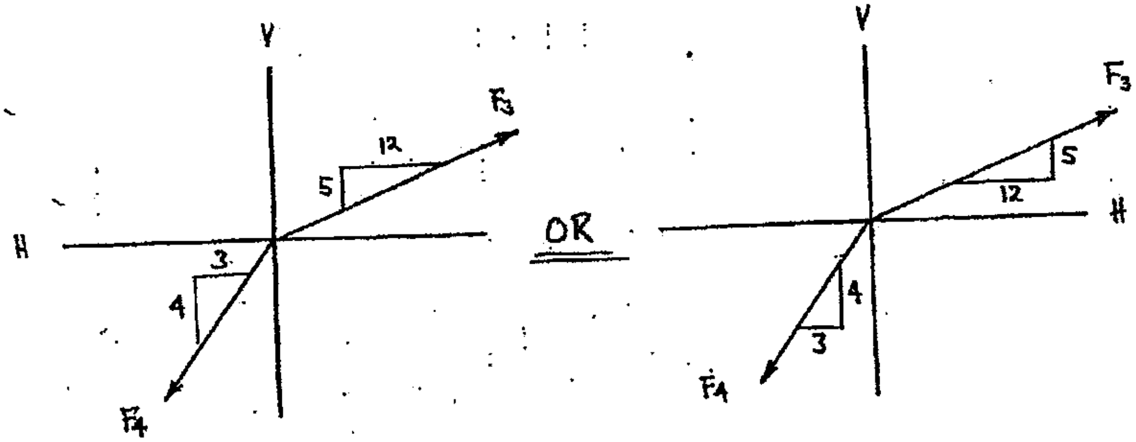

Figure 1-5: Use of slope triangle to specify direction

SIMILAR TRIANGLES

Two triangles are said to be similar if each the angles in one of the triangles is equal to its corresponding angle in the second triangle. If two triangles are proved to be similar triangles (all corresponding angles are equal), then their corresponding sides will be proportional. The triangles shown in Figure 1-6 are used to demonstrate the theory of similar triangles.

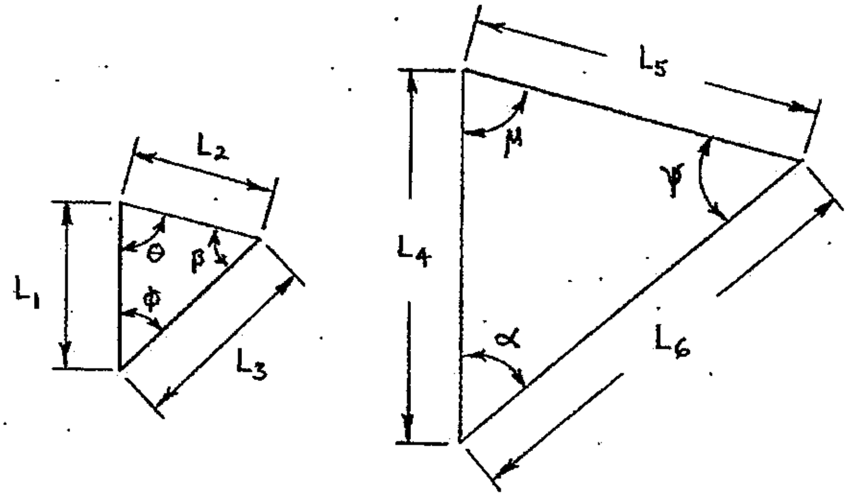

FIGURE 1-6: Two similar triangles

From Figure 1-6:

If: $\phi=\alpha$, $\theta=\mu$, and $\beta=\psi$ then the triangles are similar

And: $\frac{L_1}{L_4}=\frac{L_2}{L_5}=\frac{L_3}{L_6}$ (corresponding sides are proportional)

For similar triangles, the ratio of any two sides in one triangle will be equal to the ratio of the corresponding two sides in the similar triangle. From the similar triangles shown in Figures 1-6:

$\frac{L_1}{L_2}=\frac{L_4}{L_5}$ and: $\frac{L_2}{L_3}=\frac{L_5}{L_6}$ and: $\frac{L_3}{L_1}=\frac{L_6}{L_4}$

The two similar triangles shown in Figure 1-6 have exactly the same orientation in space, but it is important to note that the orientation of two triangles has no effect on whether the triangles are similar. If the triangle shown on the right in Figure 1-6 were orientated 122^0 clockwise from its shown position, the two triangles would still be similar triangles since their corresponding angles are equal. Typically, similar triangles are identified based on corresponding angles being equal, regardless of the orientation of the triangles.

Example 1-2: Calculate the lengths of sides L_2 and L_3 for the right triangle shown below.

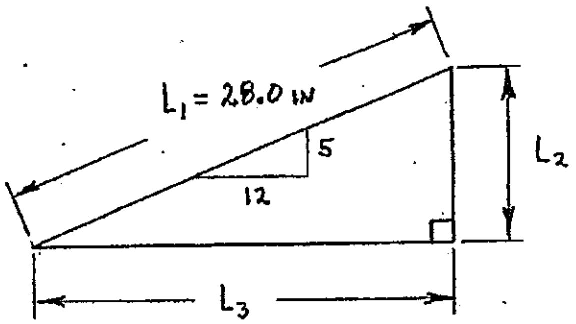

Since the hypotenuse of the slope triangle is collinear with side L_1, and the perpendicular sides of the slope triangle are drawn parallel to the corresponding perpendicular sides of the right triangle ABC, then the slope triangle and the larger triangle are similar triangles and their corresponding angles are equal (see working diagram below).

<u>Working diagram:</u>

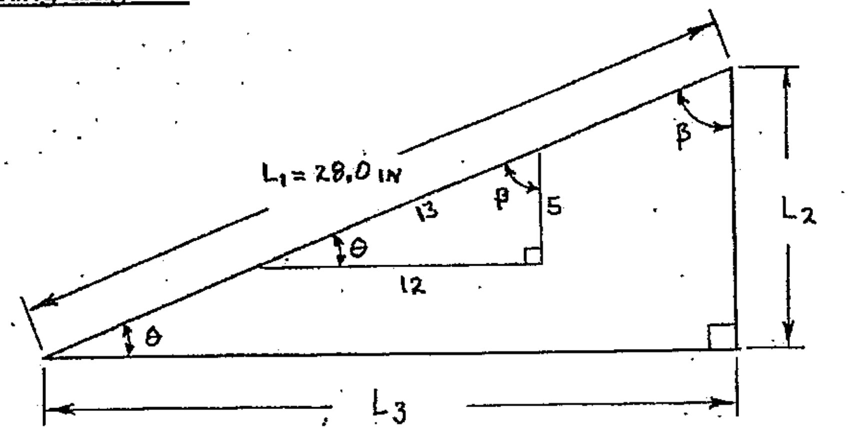

Method 1: Solve for angle θ, and then use trig functions to calculate sides L_2 and L_3.

Solve for angle θ:

$$\tan\theta = \frac{\text{opposite}}{\text{adjacent}} = \frac{L_2}{L_3}$$

Or, from the slope triangle: $\tan\theta = \dfrac{5}{12}$

$$\theta = \tan^{-1}\left(\frac{5}{12}\right)$$

$$\theta = \underline{\underline{22.6199^0}}$$

cont'd.

Example 1-2: (cont'd.)

Solve for the length of side L_2:

$$\sin\theta = \frac{\text{opposite}}{\text{hypotenuse}} = \frac{L_2}{L_1}$$

$$L_2 = L_1(\sin\theta)$$

$$L_2 = (28.0\text{ in})(\sin 22.6199^0)$$

$$L_2 = 10.7692\text{ in}$$

$$L_2 = \underline{\underline{10.77\text{ in}}} \qquad \text{(to 4 significant figures)}$$

Solve for the length of side L_3:

$$\cos\theta = \frac{\text{adjacent}}{\text{hypotenuse}} = \frac{L_3}{L_1}$$

$$L_3 = L_1(\cos\theta)$$

$$L_3 = (28.0\text{ in})(\cos 22.6199^0)$$

$$L_3 = 25.8461\text{ in}$$

$$L_3 = \underline{\underline{25.85\text{ in}}}$$

Method 2: Solve for lengths L_2 and L_3 directly using the slope triangle, since the corresponding sides of similar triangles are proportional.

Solve for length of side L_2:

$$\frac{L_2}{L_1} = \frac{5}{13}$$

$$L_2 = \left(\frac{5}{13}\right)L_1$$

$$L_2 = \left(\frac{5}{13}\right)(28.0\text{ in})$$

$$L_2 = 10.7692\text{ in}$$

$$L_2 = \underline{\underline{10.77\text{ in}}} \qquad \text{(same as Method 1)}$$

cont'd.

Example 1-2: (cont'd.)

Solve for length of side L_3:

$$\frac{L_3}{L_1} = \frac{12}{13}$$

$$L_3 = \left(\frac{12}{13}\right)L_1$$

$$L_3 = \left(\frac{12}{13}\right)(28.0\text{ in})$$

$$L_3 = 25.8462\text{ in}$$

$$L_3 = \underline{\underline{25.85\text{ in}}} \qquad \text{(same as Method 1))}$$

**(Method 2 is a much more direct method to find lengths a and b)

UNIT CONVERSION

The two most common unit systems used for technical work are the International System (SI), and the U.S. Customary System (USC). Individual quantities may be shown with either SI or USC units. However, accepted practice is to work with only one system of units when solving a specific problem. So, unit conversion ***between*** systems may be necessary either prior to any numeric solution, or within the numeric solution of a problem, if the initial units given for individual quantities are *mixed* (units for some quantities are SI, units for other quantities are USC).

Unit conversion may also be required ***within*** a unit system so that the units for each fundamental dimension are all consistent. For example, USC units might initially be given in feet, miles, yards and inches for various quantities of length. Unit conversions within the USC system would then be required so that all length quantities are expressed with the same unit; this can also be done either prior to any numeric solution or within the numeric solution of a problem.

The ***factor-label unit conversion*** method will be used throughout this manual. A table of common unit equivalences is included in the Appendix (Table A1); these unit equivalences should be used to complete any unit conversions required for problems shown in this manual.

Example 1-3: A force moment is to be calculated based on the equation and quantities shown below. Final units for the force moment are to be kip-in.

Force moment = (force)($\perp$ distance)

Where: force = 12,400 N
$\perp$ distance = 9.854 ft

Method 1: Convert units prior to any numerical solution (convert force to kip, convert length to inch), then use converted values in the equation.

$$\text{force} = (12{,}400\ \text{N})\left(\frac{1\ \text{lb}}{4.45\ \text{N}}\right)\left(\frac{1\ \text{kip}}{1000\ \text{lb}}\right) = 2.78763\ \text{kip}$$

$$\perp\ \text{distance} = (9.854\ \text{ft})\left(\frac{12\ \text{in}}{1\ \text{ft}}\right) = 118.248\ \text{in}$$

$$\text{Force moment} = (\text{force})(\perp\ \text{distance})$$

$$\text{Force moment} = (2.78763\ \text{kip})(118.248\ \text{in})$$

$$\text{Force moment} = \underline{\underline{329.632\ \text{kip in}}}$$

Method 2: Show/use all unit conversion factors within the equation.

$$\text{Force moment} = (\text{force})(\perp\ \text{distance})$$

$$\text{Force moment} = \left[(12{,}400\ \text{N})\left(\frac{1\ \text{lb}}{4.44822\ \text{N}}\right)\left(\frac{1\ \text{kip}}{1000\ \text{lb}}\right)\right]\left[(9.854\ \text{ft})\left(\frac{12\ \text{in}}{1\ \text{ft}}\right)\right]$$

$$\text{Force moment} = \underline{\underline{329.632\ \text{kip in}}} \qquad \text{(same as Method 1)}$$

SUMMARY

The trigonometry topics presented here are the ones used most often (almost constantly) in the solution of Statics problems. This should all be review material, but if you are not ***very*** comfortable with basic trigonometry (right triangle trig, Law of Sines, Law of Cosines, similar triangles, etc.) then you *will* need to do some practice to sharpen these problem solving skills.

One of the most challenging aspects of using trigonometry when solving engineering mechanics problems is that the triangles and angles you may need for your solution are not always clearly defined. In most cases you have to decide which angles/triangles are required, and possibly construct additional triangles based on given information and given diagrams. Unlike a math course, ***you*** have to decide what represents a triangle and which trigonometry functions will be required to arrive at a correct solution.

Use of consistent units is extremely important when solving technical problems. Unit conversion factors are employed to generate consistent and correct units both between unit systems and within a unit system. Unit conversions can be done prior to substituting values into an equation, or the proper unit conversion factors can be used within an equation.

FURTHER EXAMPLE PROBLEMS (solutions in GFSA format are on the following pages)

Example 1-4: A section of landing gear for an airplane is shown below. Calculate the angle (degrees) formed by links BC and CD.

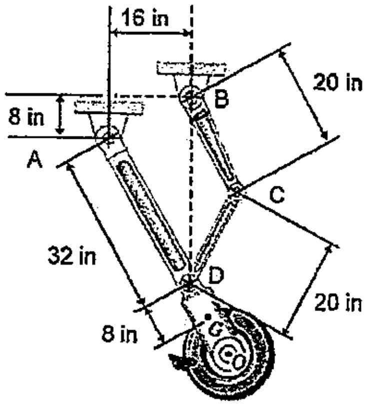

Example 1-5: A truss is constructed from four straight members as shown below. The pins at supports A and B lie on a common vertical line. Member BD is horizontal. Calculate the location of the point where a line collinear with member AC intersects member BD. Specify the location of the point of intersection as a horizontal distance (ft) from point B.

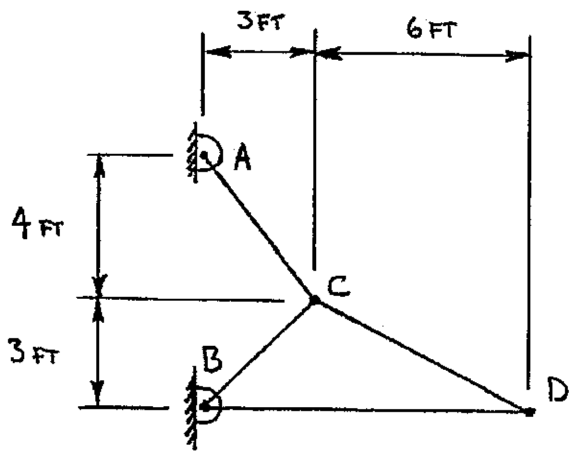

Example 1-6: Convert a moment of $M_A = 247.8$ kN-m to units of lb-ft.

Example 1-7: Convert a distributed load of $L = 368.5\frac{\text{lb}}{\text{ft}}$ to units of $\frac{\text{N}}{\text{cm}}$.

PROBLEM: Example 1-4

GIVEN: A section of landing gear for an airplane is shown below.

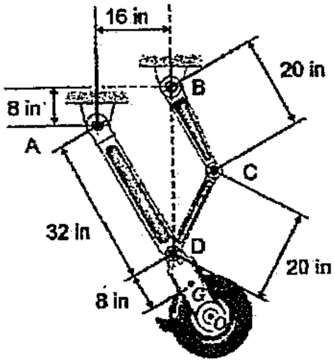

FIND: Calculate the obtuse angle θ (degrees) formed by links BC and CD.

SOLUTION:

Working diagram:

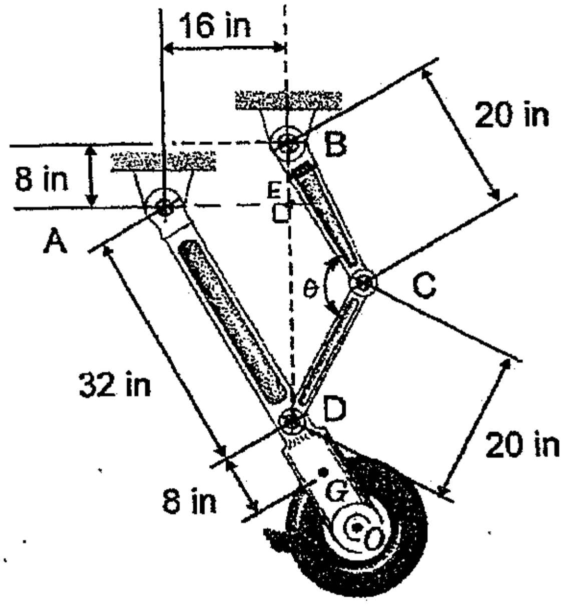

A HORIZONTAL LINE WAS EXTENDED FROM POINT A TO INTERSECT WITH LINE BD. RIGHT TRIANGLE AED CAN NOW BE USED IN SOLUTION.

TOTAL LENGTH OF LINE BD:

BD = BE + DE WHERE: BE = 8 IN

CONT'D.

PROBLEM: EXAMPLE 1-4 (CONT'D.)

CALCULATE LENGTH DE: (USING PYTHAGOREAN THEOREM)

$$AD^2 = AE^2 + DE^2$$

$$DE^2 = AD^2 - AE^2$$

$$DE = \sqrt{AD^2 - AE^2}$$

$$DE = \sqrt{(32\text{ in})^2 - (16\text{ in})^2}$$

$$DE = \underline{\underline{27.7128\text{ in}}}$$

CALCULATE TOTAL LENGTH OF LINE BD: (BE = 8 IN)

$$BD = BE + DE$$

$$BD = 8\text{ in} + 27.7128\text{ in}$$

$$BD = \underline{\underline{35.7128\text{ in}}}$$

CALCULATE ANGLE θ: (USING LAW OF COSINES)

$$BD^2 = BC^2 + CD^2 - 2(BC)(CD)\cos\theta$$

$$2(BC)(CD)\cos\theta = BC^2 + CD^2 - BD^2$$

$$\cos\theta = \frac{BC^2 + CD^2 - BD^2}{2(BC)(CD)}$$

$$\theta = \cos^{-1}\left[\frac{BC^2 + CD^2 - BD^2}{2(BC)(CD)}\right]$$

$$\theta = \cos^{-1}\left[\frac{(20\text{ in})^2 + (20\text{ in})^2 - (35.7128\text{ in})^2}{2(20\text{ in})(20\text{ in})}\right]$$

$$\theta = \underline{\underline{126.4595^\circ}}$$

ANSWER:

$\theta = 126.5^\circ$

PROBLEM: Example 1-5

GIVEN: A truss is constructed from four straight members as shown below. Member BD is horizontal. The dashed line CE is collinear with member AC.

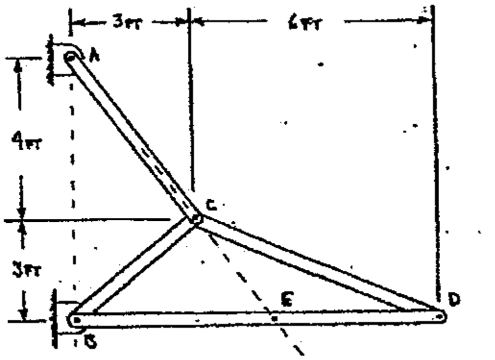

FIND: Calculate the horizontal distance (ft) from B to E.

SOLUTION:

WORKING DIAGRAM:

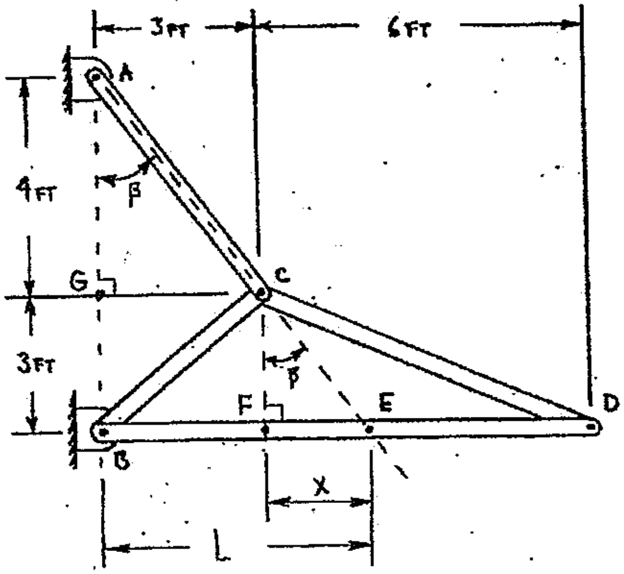

TRIANGLES ACG AND CEF ARE SIMILAR TRIANGLES.

SOLVE FOR LENGTH X:

$$\frac{X}{CF} = \frac{CG}{AG}$$

$$X = \left(\frac{CG}{AG}\right)(CF)$$

$$X = \left(\frac{3\text{FT}}{4\text{FT}}\right)(3\text{FT})$$

$$X = \underline{2.250 \text{ FT}}$$

SOLVE FOR LENGTH L:

$$L = BF + X$$

$$L = 3\text{FT} + 2.250\text{ FT}$$

$$L = \underline{5.250 \text{ FT}}$$

ANSWER:

$L = 5.250$ FT

PROBLEM: EXAMPLE 1-6

GIVEN: $M_A = 247.8 \text{ kN·m}$

FIND: CONVERT M_A TO UNITS OF lb·FT.

SOLUTION:

$$M_A = 247.8 \text{ kN·m} \left(\frac{1000 \text{ N}}{1 \text{ kN}}\right)\left(\frac{1 \text{ lb}}{4.44822 \text{ N}}\right)\left(\frac{1 \text{ FT}}{0.3048 \text{ m}}\right)$$

$$M_A = \underline{182,768 \text{ lb·FT}}$$

ANSWER:

$M_A = 182,800 \text{ lb·FT}$

PROBLEM: EXAMPLE 1-7

GIVEN: $L = 368.5 \frac{\text{lb}}{\text{FT}}$

FIND: CONVERT L TO UNITS OF $\frac{\text{N}}{\text{cm}}$.

SOLUTION:

$$L = 368.5 \frac{\text{lb}}{\text{FT}} \left(\frac{4.44822 \text{ N}}{1 \text{ lb}}\right)\left(\frac{1 \text{ FT}}{0.3048 \text{ m}}\right)\left(\frac{1 \text{ m}}{100 \text{ cm}}\right)$$

$$L = \underline{53.7785 \frac{\text{N}}{\text{cm}}}$$

ANSWER:

$L = 53.78 \frac{\text{N}}{\text{cm}}$

PRACTICE PROBLEMS

1.1 The parallelogram shown below has sides of 60 in and 40 in. Calculate the length (in) of the SHORTEST diagonal of the parallelogram.

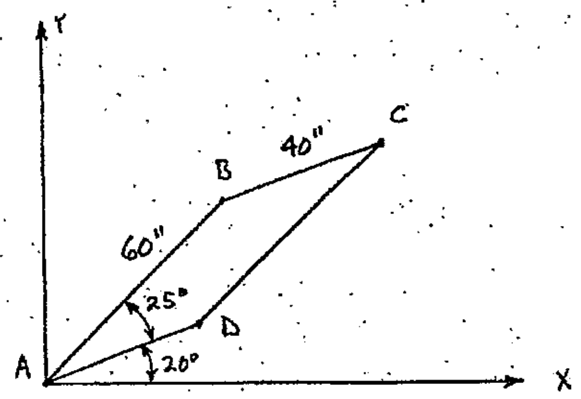

1.2 The parallelogram shown below has sides of 50 in and 32 in. Calculate the length (in) of the LONGEST diagonal of the parallelogram.

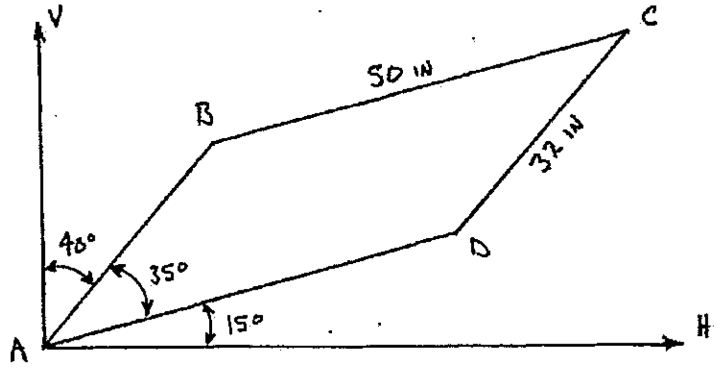

1.3 The right triangle shown below has an area of 42 m^2. Calculate the length of the base dimension x (m) that would define a similar triangle with an area of 21 m^2.

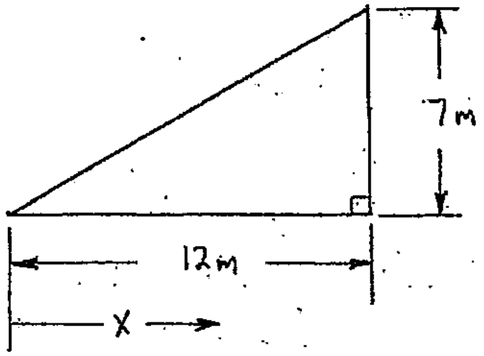

PRACTICE PROBLEMS

1.4 A truss is constructed as shown below. Calculate the length (m) of a line perpendicular to member AC that also passes through point B. The length of the line is measured from point B to member AC.

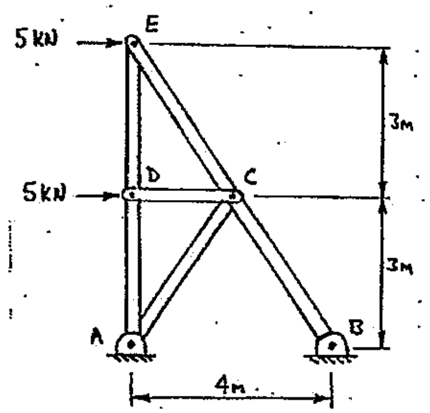

1.5 A triangle has sides as shown below. Calculate the magnitudes (degrees) of angles A and B.

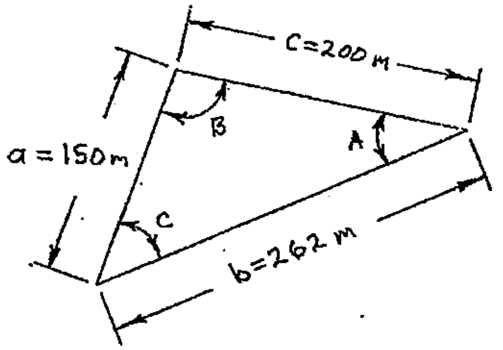

1.6 A frame has dimensions as shown below. Determine the vertical distance (ft) from point C where a line collinear with BE would intersect with a line collinear with CD.

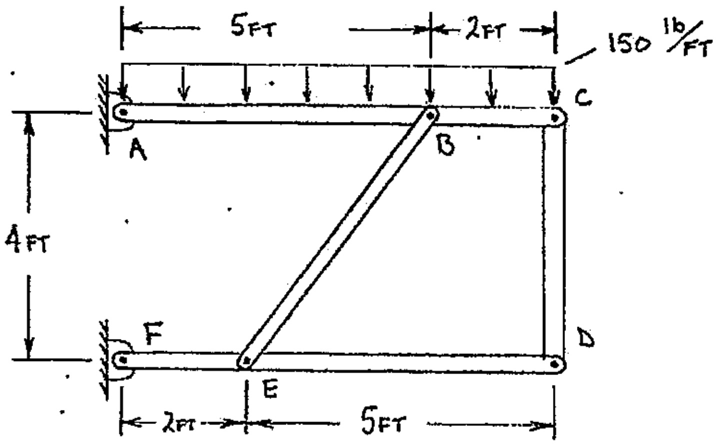

Practice Problems

1.7 Convert an area of $A = 27.36\ ft^2$ to units of cm^2.

1.8 Convert a moment of $M_B = 7595.4$ lb-in to units of N-mm.

1.9 Convert a force of $F_1 = 954.8$ kN to units of kips.

1.10 Convert a distributed load of $L = 485.2\frac{kN}{m}$ to units of $\frac{lb}{in}$.

This page intentionally left blank.

CHAPTER 2: FORCE, FORCE SYSTEMS, AND SUMMATION OF FORCES

FORCE

From a pure physics standpoint, force (F) derives from mass as follows:

Force = (mass)(acceleration) ⇒ $F = (m)(a)$

However, from a practical solid mechanics viewpoint, a force could be considered as a fundamental concept since the effects of a force on an object can be observed and/or measured, even though a force cannot be seen.

One reasonable definition for a force can be taken mainly from Webster's dictionary. A force is "an influence on a body or system producing or tending to produce a change" in the original body or system. The change could be in the body's movement, shape, position, etc.

A force (influence) causes things (bodies or systems) to change in predictable ways. A force can also be defined as a push or pull along a linear path. This push or pull can be exerted by one body on another either through direct contact, or through some separation distance between the bodies (i.e., gravitational, magnetic, or electrical forces).

Forces on an object do not act singly, but always act in pairs, equal and opposite (from Newton's 3rd Law). However, a force may be analyzed singly, in order to study and evaluate its effects.

Forces have the following characteristics (or attributes):

Magnitude ⇒ Describes the *size* (how large or small) of a force, and is typically expressed as a numeric value with appropriate units.

Direction ⇒ Describes the *orientation of the force's line or action* (the line along which the force acts). Orientation is usually expressed as the angle between the force's line of action and a know reference, or with a slope triangle whose hypotenuse is collinear with the force's line of action.

Sense ⇒ Describes *which way* the force acts along its line of action. The sense is shown as an arrowhead that points in the direction that the force acts along its line of action.

Point of application ⇒ Describes the *physical location* (point) where the force's influence is applied, and is normally shown as a specific point on an object that is identified by some appropriate symbol.

A **vector** is a quantity that has magnitude, direction and sense so ***a force is a vector quantity***. A vector is commonly shown as a directed line segment (an arrow) where the length (of the arrow) represents magnitude, orientation (of the arrow) represents direction, and sense is shown by an arrowhead on one end of the shaft. Figure 2-1 shows a typical representation of a vector.

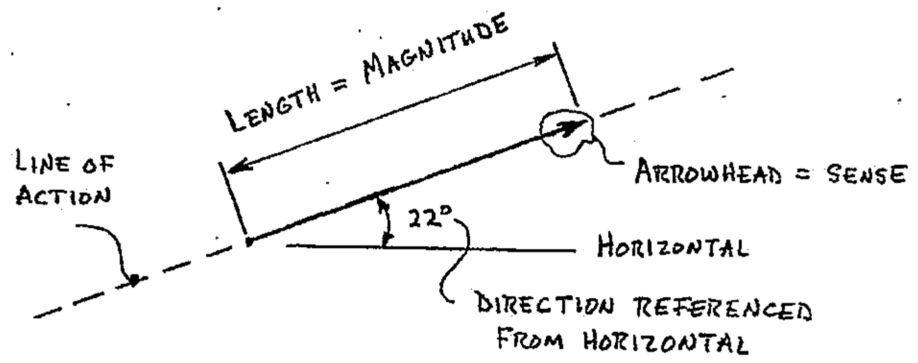

FIGURE 2-1 Typical representation of a vector

Since a force is a vector quantity, the graphical (or pictorial) representation of a force is very similar to that of a vector. A force is typically shown as an arrow where length represents magnitude, orientation represents direction and sense is given by the arrowhead. The point of application of the force is normally at either the tail of the arrow or at the arrowhead, as shown in Figure 2-2 below.

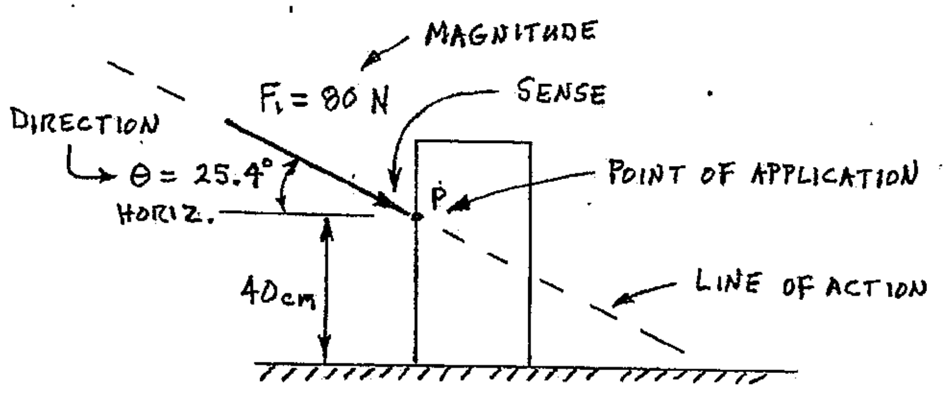

FIGURE 2-2 Typical representation of a force

TRANSMISSIBILITY OF A FORCE

Transmissibility of a force means that the point of application of a force can be moved anywhere along its line of action on an object without changing the effect of the force on that object. Figure 2-3 shows a force applied to either point A or point B on an object. Since points A and B are both on the force's line of action, the force would have the same effect on the object if applied at either point.

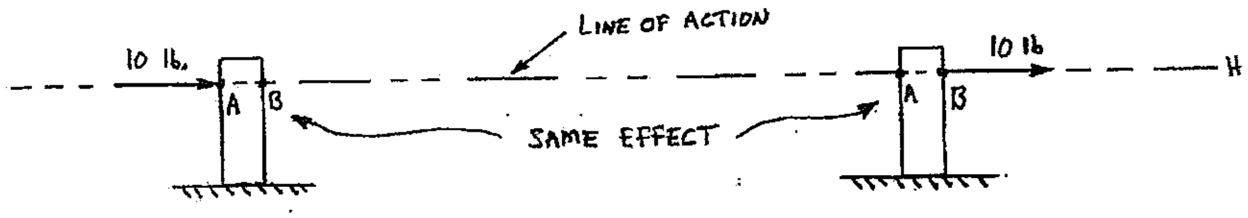

FIGURE 2-3 Transmissibility of a force

TYPES OF FORCES

There are many different types of forces, such as concentrated forces, distributed loads, pressure loads, impact forces and cyclic loads. A concentrated force is assumed to act over an area so small that, for practical purposes, the force can be considered to act at a point. Typical units for concentrated forces would be pounds (lb) or Newtons (N). A distributed load is a force that is evenly distributed along a length, such as a constant load along the top of a beam. Distributed loads are sometimes called line loads, and typical units would be lb/ft or N/m. A pressure load is a force that is evenly distributed over an area, such as the pressure in a hydraulic cylinder. Pressure loads generally have units of lb/in^2 (psi) or N/m^2. Impact loads and cyclic loads are both due to dynamic loading conditions, and will not be addressed in this course. For this course, the terms load and force are assumed to describe the same actions or influences, may will be used interchangeably.

TYPES OF FORCE SYSTEMS

A force system is generally two or more forces that are acting on the same body or system. A force system is coplanar if all forces lie in the same plane; coplanar systems are 2-dimemsional. Non-coplanar force systems are 3-dimensional. In a concurrent force system, all forces intersect at a common point. Parallel force systems occur when the lines of action of all forces are parallel. Normally, six common force systems can be defined by combining the information presented in this paragraph as follows:

Six common force systems:

1. coplanar, concurrent
2. coplanar, non-concurrent
3. coplanar, parallel

} ⇒ 2-D force systems

4. non-coplanar, concurrent
5. non-coplanar, non-concurrent
6. non-coplanar, parallel

} ⇒ 3-D force systems

Any of the six force systems described here may simply be addressed as "force systems", since the solutions for problems containing any type of force system will follow the same basic pattern. For the force systems common to Statics problems, you must develop skill in the following problem solving techniques:

- Construction of complete, analytical diagrams
- Summation of forces
- Summation of moments
- Application of the principles of static equilibrium

Mastery of the four items listed above is crucial to successfully solving Statics problems!! Summation of forces (Σ F) to determine a resultant force is a very common step in Statics problem solutions. Since forces are vector quantities, any calculations involving forces (vectors) must take into account all of the force's (vector's) characteristics.

Summation of Forces

Summation of forces (vectors) requires that the magnitude, direction and sense of each force must be taken into account. The sum of two or more forces is called a ***resultant, or resultant force*** (F_R). Summation of forces can be done via several methods, however only two methods will be presented here. Both methods rely on graphical representations (working drawings) of the forces as the initial step in the problem solution.

Summation of Forces using the Parallelogram Method

The resultant (F_R) of two forces is represented by the diagonal of a parallelogram formed from the initial forces. The initial forces are called components, or component forces. Care must be exercised when constructing the parallelogram and selecting the diagonal.

Constructing the parallelogram:

1. The two initial (component) forces must form adjacent sides of the parallelogram, and must be placed head-to-head or tail-to-tail (like parts must come together) as shown below:

2. The two remaining sides of the parallelogram are drawn in, with one side parallel to each of the components.

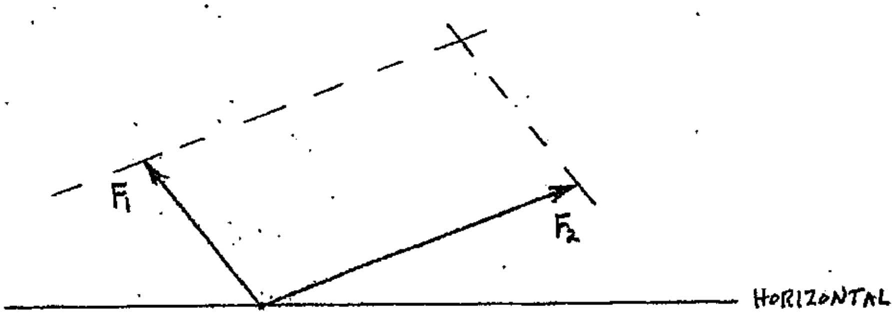

3. A diagonal is then constructed that passes through the intersection of the components; this diagonal represents the resultant force (F_R). The length of the diagonal represents the magnitude of the resultant force. The direction of the diagonal can be found by determining the angle between the resultant's line of action and some known reference axis. The sense of the resultant can be easily determined because all vectors in the diagram must come together with like parts (heads-to-heads or tails-to-tails), as shown below.

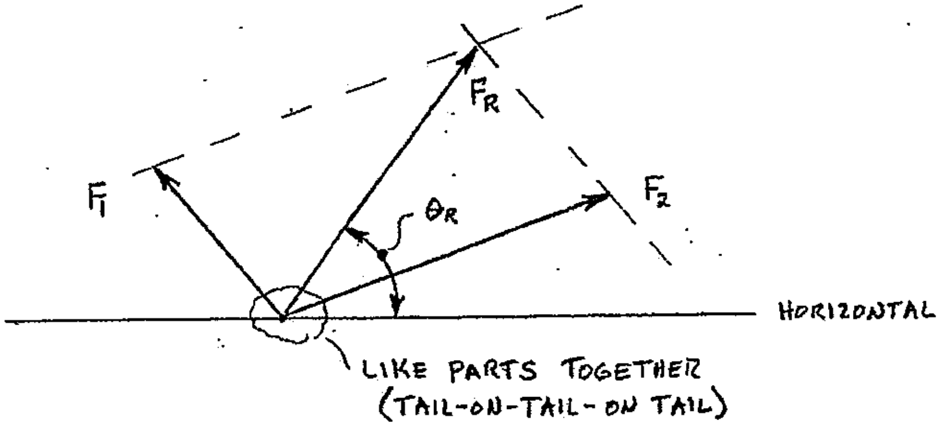

While not an actual step in the parallelogram method, the direction (θ_R) of the resultant force is typically specified from a horizontal axis, using an angle of less than 90^0, as shown in the diagram above.

An example using the parallelogram method to determine the resultant of two forces is shown on the following pages.

Example 2-1 Two forces act on point A as shown below. Determine the magnitude, direction and sense of the resultant of the two forces using the parallelogram method.

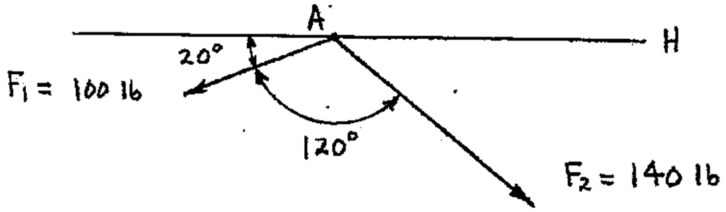

First, a working diagram is developed that shows all of the information that will be used in the problem solution. This working diagram should be **LARGE**, so that information from the diagram is easy to find, read and use – not just by you, but by someone unfamiliar with your work.

WORKING DIAGRAM:

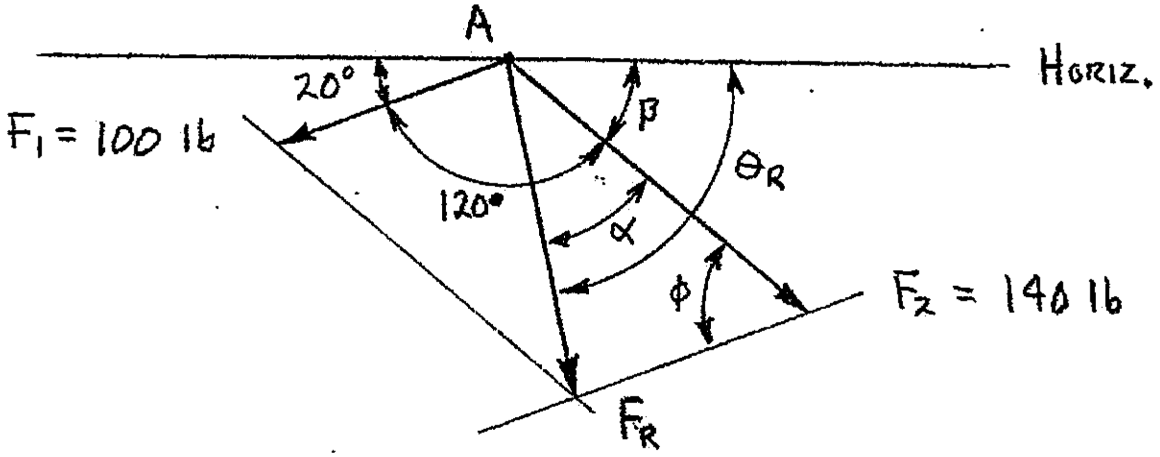

First, calculate angle ϕ:

$$360^0 = 2(120^0) + 2(\phi)$$
$$2(\phi) = 360^0 - [2(120^0)]$$
$$\phi = \frac{360^0 - [2(120^0)]}{2}$$
$$\phi = \underline{\underline{60^0}}$$

cont'd.

Example 2-1: (cont'd.)

Next, use the Law of Cosines to calculate the magnitude of the resultant, F_R:

$$F_R^2 = F_1^2 + F_2^2 - 2(F_1)(F_2)\cos\phi$$
$$F_R = \sqrt{F_1^2 + F_2^2 - 2(F_1)(F_2)\cos\phi}$$
$$F_R = \sqrt{(100\,lb)^2 + (140\,lb)^2 - 2(100\,lb)(140\,lb)\cos 60^0}$$
$$F_R = \underline{\underline{124.899\,lb}} \qquad \text{(magnitude only)}$$

Then use the Law of Sines to calculate angle α:

$$\frac{\sin\alpha}{F_1} = \frac{\sin\phi}{F_R}$$
$$\sin\alpha = \left(\frac{F_1}{F_R}\right)\sin\phi$$
$$\alpha = \sin^{-1}\left[\left(\frac{F_1}{F_R}\right)\sin\phi\right]$$
$$\alpha = \sin^{-1}\left[\left(\frac{100\text{ lb}}{124.899\text{ lb}}\right)\sin 60^0\right]$$
$$\alpha = \underline{\underline{43.8983^0}}$$

Finally, calculate the direction (angle θ_R) of F_R with respect to horizontal:

$$\beta = 180^0 - (20^0 + 120^0) = \underline{\underline{40^0}}$$

$$\theta_R = \beta + \alpha$$
$$\theta_R = 40^0 + 43.8983^0$$
$$\theta_R = \underline{\underline{83.8983^0}}$$

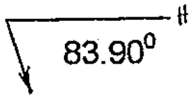

Answer:

F_R = 124.9 lb 83.90^0

CALCULATING THE SUM (RESULTANT FORCE) OF 3 OR MORE FORCES (VECTORS)

Sometimes a resultant force must be calculated for more than two forces, since any number of forces could be summed to form a single resultant force. The parallelogram method of vector summation could be used to find the resultant for three or more forces, but only two forces can be summed in each step.

Assume that the resultant of forces F_1, F_2 and F_3 is to be found using the parallelogram method (see Figure 2-4). First, Force F_1 would be summed with F_2 to produce the intermediate resultant F_I. Then the intermediate resultant F_I would be summed with force F_3 to determine the resultant F_R, which is the resultant of all three original forces. Two separate parallelograms must be drawn, as shown in Figure 2-5, and each parallelogram has specific angles that would be required in the solution. The parallelogram method of vector summation becomes slow and tedious for systems of three or more vectors, but can be used if required.

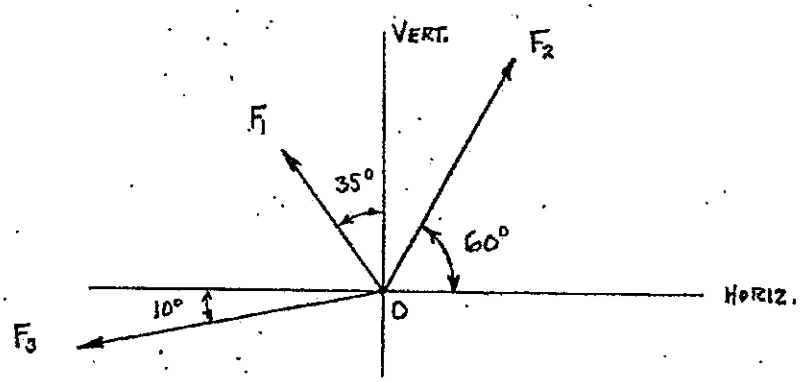

FIGURE 2-4 A system of three forces, applied at point O

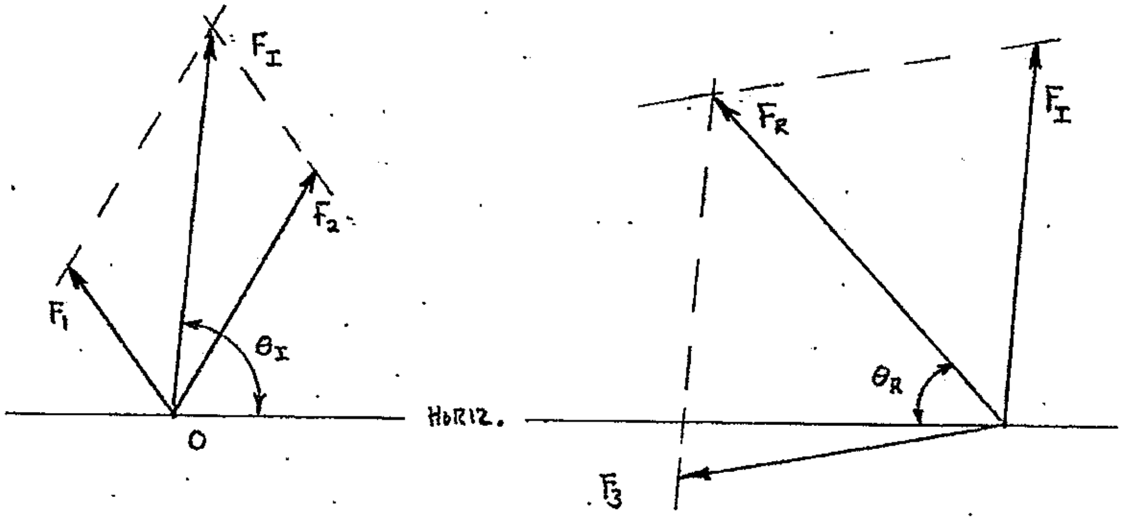

FIGURE 2-5 Summation of forces F_1, F_2 and F_3 using the parallelogram method

VECTOR SUBTRACTION

Thus far, force summation (vector summation) has been the combining through *vector addition* of two or more forces. In Figure 2-6, vector B is added to vector A using the parallelogram method and the resultant is R_1.

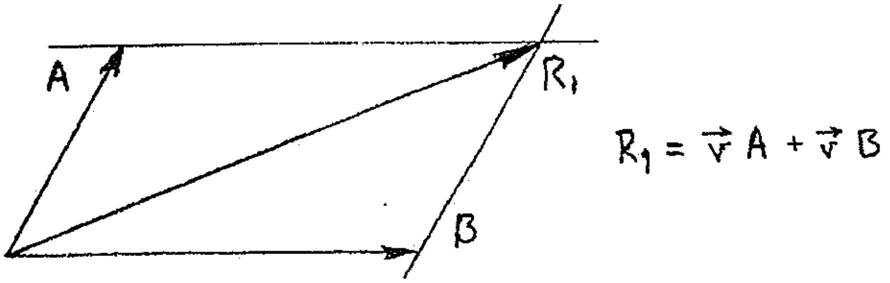

FIGURE 2-6 Adding vectors A and B

Vector subtraction is accomplished by combining the negative of one vector with another vector. The *negative of a vector* will have magnitude and direction identical to the original vector, but will have opposite sense. If, using the parallelogram method and vectors A and B from Figure 2-6, vector B is subtracted from vector A the resultant would be R_2, as shown in Figure 2-7. Vector subtraction can (and usually does) change the magnitude, direction and sense of the resultant (as compared to the resultant found from vector addition). Vector subtraction returns the *difference* between the magnitudes of two vectors.

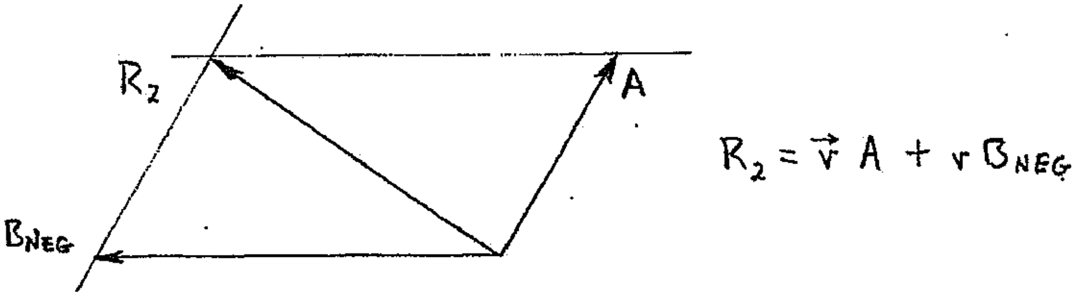

FIGURE 2-7 Subtracting vector B from vector A (adding the negative of B to A)

RESOLVING A FORCE (VECTOR) INTO TWO COMPONENT FORCES

There are three words (reduce, resolve, resultant) used throughout Statics that sound very similar but have different and very specific definitions. The word **reduce** means "to unite into one whole, or to take many and make one". So, you *reduce* a system of forces to get a single **resultant** force (the resultant force is the summation of two or more forces).

The word **resolve** means "to separate into constituent of elementary parts". A force (or vector) can be *resolved* into two components with respect to a specific set of axes. Example 2-2 demonstrates resolving a resultant force (F_R from Example 2-1) into two components (its elementary parts).

Example 2-2: A single force (F_R) is shown below, along with a specific set of axes (the axes are labeled 1 and 2). Use the parallelogram method to resolve F_R into two component forces with lines of action collinear to the axes shown (axes are numbered 1 and 2).

F_R = 124.9 lb @ 83.90°

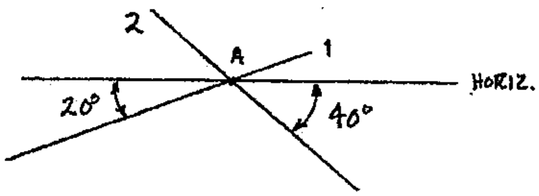

WORKING DIAGRAM:

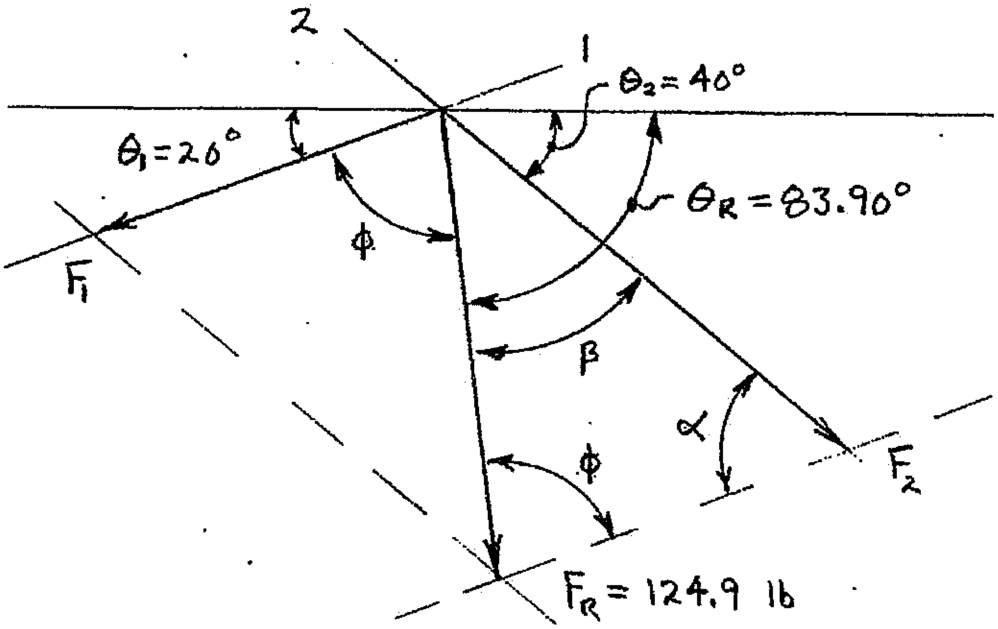

cont'd.

Example 2-2: (cont'd.)

Solve for angles β, Φ, and α:

$$\beta = \theta_R - \theta_2 \qquad \phi = 180^0 - \theta_R - \theta_1 \qquad \alpha = 180^0 - (\beta + \phi)$$

$$\beta = 83.90^0 - 40^0 \qquad \phi = 180^0 - 83.90^0 - 20^0 \qquad \alpha = 180^0 - (43.90^0 + 76.10^0)$$

$$\beta = \underline{\underline{43.90^0}} \qquad \phi = \underline{\underline{76.10^0}} \qquad \alpha = \underline{\underline{60.00^0}}$$

Solve for component F_1 using the Law of Sines:

$$\frac{F_1}{\sin\beta} = \frac{F_r}{\sin\alpha}$$

$$F_1 = \left(\frac{\sin\beta}{\sin\alpha}\right)(F_R)$$

$$F_1 = \left(\frac{\sin 43.90^0}{\sin 60^0}\right)(124.9 \text{ lb})$$

$$F_1 = 100.004 \text{ lb}$$

$$F_1 = \underline{\underline{100.0 \text{lb} \quad @ \quad 20^0}}$$

(same as F_1 from Example 2-1)

Solve for component F_2 using the Law of Sines:

$$\frac{F_2}{\sin\phi} = \frac{F_R}{\sin\theta_R}$$

$$F_2 = \left(\frac{\sin\phi}{\sin\theta_R}\right)(F_R)$$

$$F_2 = \left(\frac{\sin 76.10^0}{\sin 60^0}\right)(124.9 \text{ lb})$$

$$F_2 = 139.999 \text{ lb}$$

$$F_2 = \underline{\underline{140.0 \text{ lb} \quad @ \quad 40^0}}$$

(same as F_2 from Example 2-1)

Answer:

$F_1 = 100.0$ lb @ 20^0

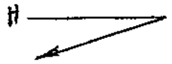

$F_2 = 140.0$ lb @ 40^0

Perpendicular Components

It has been shown that a single force can be resolved into two components based on a set of planar axes; this is basically the reverse of summing two forces to calculate a resultant force. However, if ***perpendicular*** axes are defined when resolving a force into its components, then the component forces will become the sides of a rectangle. The Law of Sines reduces to a right triangle trig function whenever the parallelogram is rectangular, so the magnitudes of the component forces can be easily calculated using right triangle trigonometry (see Example 2-3). However, right triangle trig functions can **only** be used for a **rectangular** parallelogram (the result of ***deliberately*** resolving a force using PERPENDICULAR axes). The direction and sense of the components can be obtained directly from the working diagram.

Example 2-3: A force (F) and a set of perpendicular axes are shown below. Determine the X and Y components (F_X and F_Y) of F, and report the components with respect to horizontal.

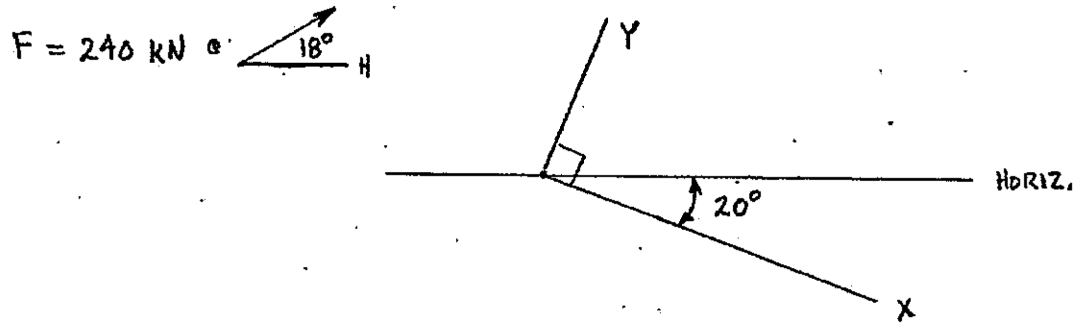

WORKING DIAGRAM:

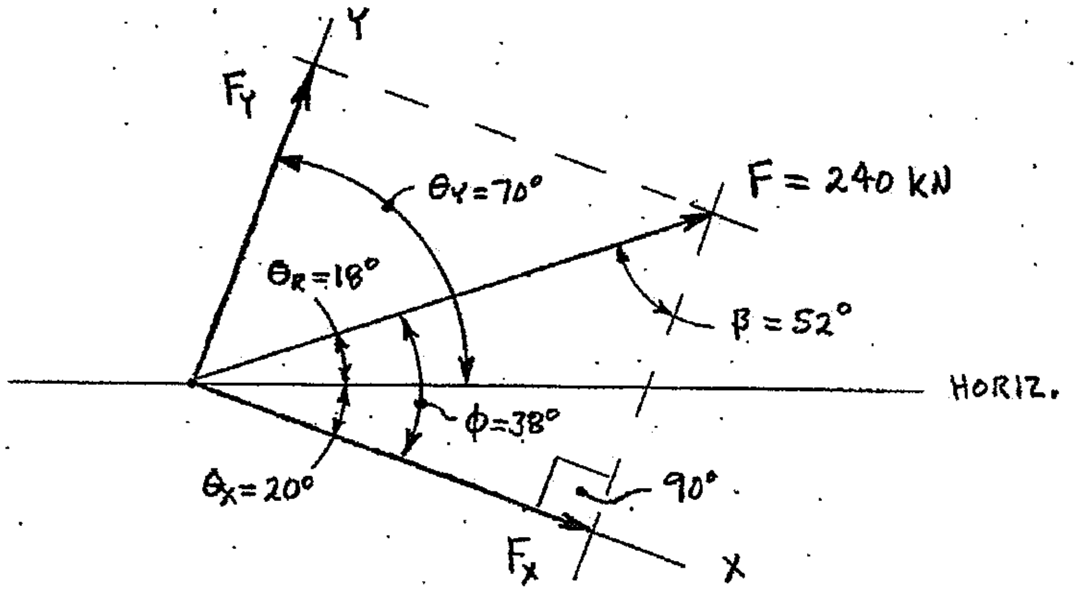

cont'd.

Example 2-3: (cont'd)

Solving for F_X using:

Law of Sines:

$$\frac{F_X}{\sin\beta} = \frac{F}{\sin 90^0}$$

$$F_X = F\left(\frac{\sin\beta}{\sin 90^0}\right) \quad \text{and} \quad \sin 90^0 = 1$$

$$F_X = F(\sin\beta)$$

⇐ same ⇒

Right triangle trig function:

$$\sin\beta = \frac{\text{opposite}}{\text{hypotenuse}}$$

$$\sin\beta = \frac{F_X}{F}$$

$$F_X = F(\sin\beta)$$

Solving for F_X using **ONLY** right triangle trig functions:

$$\sin\beta = \frac{F_X}{F}$$

$$F_X = F(\sin\beta)$$

$$F_X = (240\text{ kN})(\sin 52^0)$$

$$F_X = 189.123\text{kN}$$

$$F_X = \underline{\underline{189.1\text{kN} \quad @ \quad 20^0}}$$

or:

$$\cos\phi = \frac{F_X}{F}$$

$$F_X = F(\cos\phi)$$

$$F_X = (240\text{ kN})(\cos 38^0)$$

$$F_X = 189.123\text{ kN}$$

$$F_X = \underline{\underline{189.1\text{kN} \quad @ \quad 20^0}}$$

Solving for F_Y using **ONLY** right triangle trig functions:

$$\sin\phi = \frac{F_Y}{F}$$

$$F_Y = F(\sin\phi)$$

$$F_Y = (240\text{ kN})(\sin 38^0)$$

$$F_y = 147.759\text{kN}$$

$$F_Y = \underline{\underline{147.8\text{ kN} \quad @ \quad 70^0}}$$

or:

$$\cos\beta = \frac{F_Y}{F}$$

$$F_Y = F(\cos\beta)$$

$$F_Y = (240\text{ kN})(\cos 52^0)$$

$$F_Y = 147.759\text{ kN}$$

$$F_Y = \underline{\underline{147.8\text{ kN} \quad @ \quad 70^0}}$$

ANSWER:

$F_X = 189.1$ KN 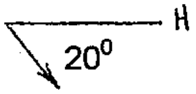

$F_Y = 147.8$ KN 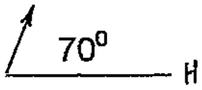

Two perpendicular components could also be reduced to determine a resultant force, as shown in Example 2-4.

Example 2-4: Reduce the two perpendicular components (F_X and F_Y from Example 2-3) shown below to a single resultant force, and specify the resultant's magnitude, direction and sense.

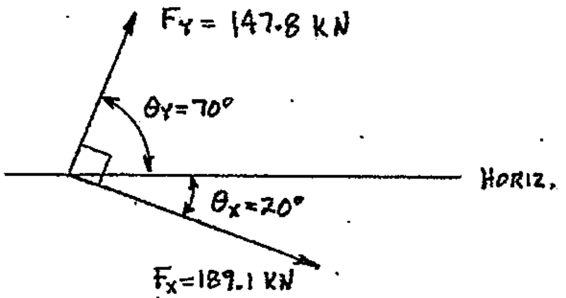

WORKING DIAGRAM:

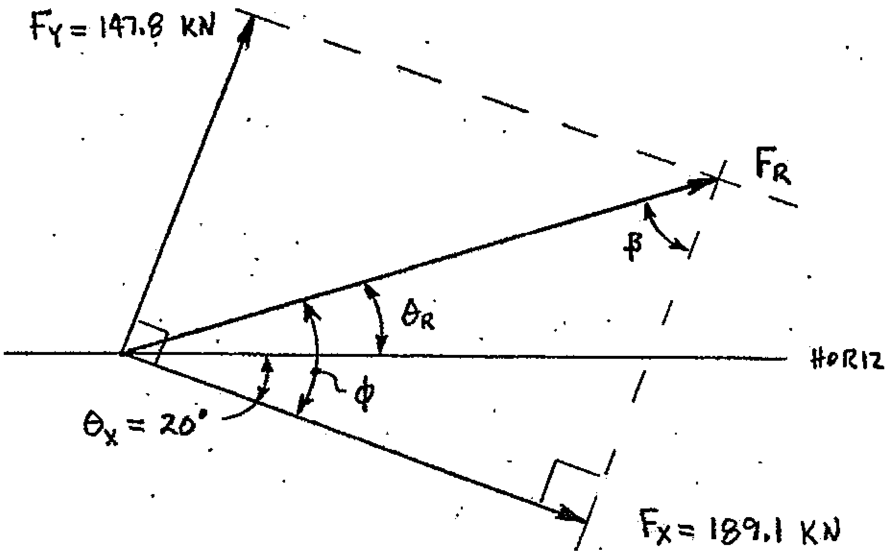

Solve for F_R using Law of Cosines:

$$F_R^2 = F_X^2 + F_Y^2 - 2(F_X)(F_Y)\cos 90^0 \qquad \text{and:} \quad \cos 90^0 = 0$$

$$F_R^2 = F_X^2 + F_Y^2 \qquad \Leftarrow \text{ Pythagorean Theorem}$$

$$F_R = \sqrt{F_X^2 + F_Y^2}$$

$$F_R = \sqrt{(189.1\,\text{kN})^2 + (147.8\,\text{kN})^2}$$

$$F_R = 240.008\,\text{kN} \qquad \text{(magnitude only)}$$

$$F_R = \underline{\underline{240.0\,\text{kN}}} \qquad \text{(same as } F_R \text{ from Example 2-3)}$$

When reducing perpendicular components, the Law of Cosines will always reduce to the Pythagorean Theorem.

Example 2-4: (cont'd)

Solving for angle θ_R:

$$\theta_R = \phi - \theta_X$$

Angle ϕ can be found using any of the following right triangle trig functions:

$$\tan\phi = \left(\frac{F_Y}{F_X}\right) \qquad \sin\phi = \left(\frac{F_Y}{F_R}\right) \qquad \cos\phi = \left(\frac{F_X}{F_R}\right)$$

$$\phi = \tan^{-1}\left(\frac{F_Y}{F_X}\right) \qquad \phi = \sin^{-1}\left(\frac{F_Y}{F_R}\right) \qquad \phi = \cos^{-1}\left(\frac{F_X}{F_R}\right)$$

$$\phi = \tan^{-1}\left(\frac{147.8\,\text{kN}}{189.1\,\text{kN}}\right) \qquad \phi = \sin^{-1}\left(\frac{147.8\,\text{kN}}{240.008\,\text{kN}}\right) \qquad \phi = \cos^{-1}\left(\frac{189.1\,\text{kN}}{240.008\,\text{kN}}\right)$$

$$\phi = \underline{\underline{38.0111^0}} \qquad \phi = \underline{\underline{38.0110^0}} \qquad \phi = \underline{\underline{38.0112^0}}$$

Angle θ_R can now be found:

$$\theta_R = \phi - \theta_X$$
$$\theta_R = 38.0111^0 - 20^0$$
$$\theta_R = \underline{\underline{18.0111^0}}$$

So, after accounting for some very minor rounding error:

$$\underline{\underline{F_R = 240\,\text{kN} \quad @ \quad 18^0}}$$ (Same as F_R from Example 2-3)

REDUCING TWO COLLINEAR FORCES TO A SINGLE RESULTANT FORCE

Two forces would be considered to be collinear if they both lie on the same line of action. The forces could either have the same sense (Figure 2-8A), or opposite sense (Figure 2-8B). If two collinear forces were to be reduced to a single resultant force, it would seem reasonable to say that the two forces in Figure 2-8A would be "added together", while in Figure 2-8B one force would be "subtracted from the other". However, for either case, the parallelogram method can be used to prove HOW the two forces are combined as they are reduced to a single resultant force.

FIGURE 2-8 Collinear forces with the same (A) or opposite (B) sense

Example 2-5: Reduce the two collinear forces shown in Figure 2-8A to a single resultant force using the parallelogram method.

FIGURE 2-8 Collinear forces with the same (A) or opposite (B) sense

The force F_1 is drawn slightly off its true line of action so that a parallelogram can be developed in the working diagram:

Working diagram: (for forces F_1 and F_2 from Figure 2-8A)

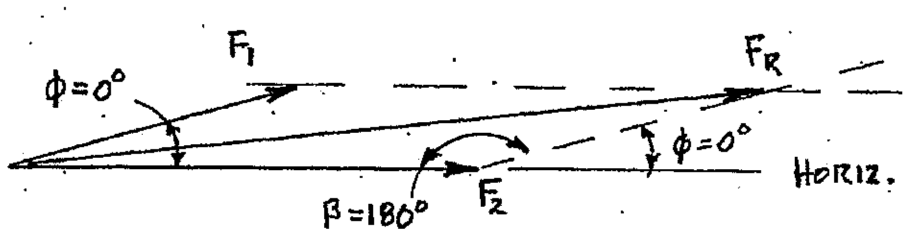

Solving for the magnitude of F_R using the parallelogram method:

$$F_R^2 = F_1^2 + F_2^2 - 2F_1F_2\cos\beta$$

$$F_R^2 = F_1^2 + F_2^2 - 2F_1F_2\cos 180^0 \qquad \text{and:} \quad \cos 180^0 = -1$$

$$F_R^2 = F_1^2 + F_2^2 - 2F_1F_2(-1)$$

$$F_R^2 = F_1^2 + F_2^2 + 2F_1F_2$$

$$F_R^2 = F_1^2 + 2F_1F_2 + F_2^2$$

$$F_R^2 = (F_1 + F_2)(F_1 + F_2)$$

$$F_R^2 = (F_1 + F_2)^2$$

$$F_R = \sqrt{(F_1 + F_2)^2}$$

$$F_R = \underline{\underline{F_1 + F_2}}$$

So, when reducing two collinear forces **that have the same sense** to a single resultant force, the magnitude of the resultant will be the **algebraic sum** of the magnitudes of each individual force. The direction is known (the forces are collinear), and the sense of the resultant will be the same as the sense of either of the collinear component forces.

Example 2-6: Reduce the two collinear forces shown in Figure 2-8B to a single resultant force using the parallelogram method.

FIGURE 2-8 Collinear forces with the same (A) or opposite (B) sense

For this proof, force F_3 will be drawn slightly off of its true line of action so that a parallelogram can be constructed in the working diagram.

Working diagram: (for forces F_3 and F_4 from Figure 2-8B)

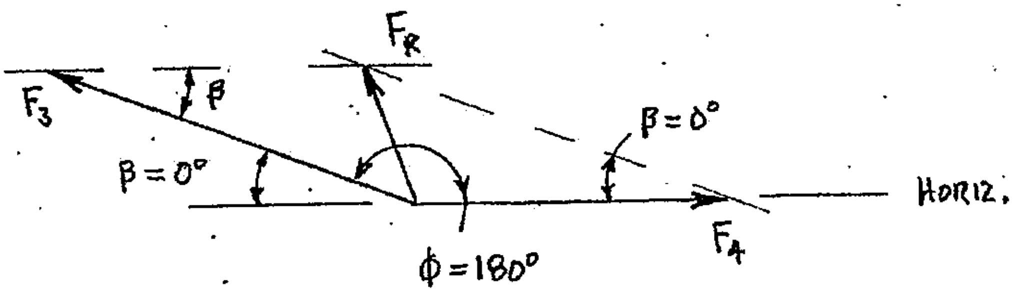

Solving for the magnitude of F_R using the parallelogram method:

$$F_R^2 = F_3^2 + F_4^2 - 2F_3F_4\cos\beta$$
$$F_R^2 = F_3^2 + F_4^2 - 2F_3F_4\cos 0^0 \qquad \text{and: } \cos 0^0 = +1$$
$$F_R^2 = F_3^2 + F_4^2 - 2F_3F_4(+1)$$
$$F_R^2 = F_3^2 + F_4^2 - 2F_3F_4$$
$$F_R^2 = F_3^2 - 2F_3F_4 + F_4^2$$
$$F_R^2 = (F_3 - F_4)(F_3 - F_4)$$
$$F_R^2 = (F_3 - F_4)^2$$
$$F_R = \sqrt{(F_3 - F_4)^2}$$
$$F_R = \underline{\underline{F_3 - F_4}}$$

So, when reducing two collinear forces **that have opposite sense** to a single resultant force, the magnitude of the resultant will be the **difference** between the magnitudes of the two component forces. The direction is known (the components are collinear, so the direction of the resultant is the same as that of the components). However, since the two components had opposite sense, the sense of the resultant will be the same as that of the component with the largest magnitude.

SUMMATION OF FORCES USING THE METHOD OF PERPENDICULAR COMPONENTS

The resultant of three or more forces (normally called a force system) is most easily found using the method of perpendicular components. First, a perpendicular coordinate system is established, and all given forces are shown. Next, rectangular parallelograms are sketched around each force so that each force's perpendicular components can be shown on the diagram. A sign convention is also established to define a positive (and implied negative) sense for each of the system's perpendicular directions. A sign (+ or -) is specified for each component based on the sign convention. All components that have the same direction are then summed; the signs take into account their different senses. Summing all components that have same direction returns the resultant's component for that direction; since there are two perpendicular directions, the summations will return the two perpendicular components of the resultant force (one component of the resultant for each direction). A second diagram is then constructed using the resultant's perpendicular components. The resultant's perpendicular components are drawn tail-on-tail (like parts together) and the two remaining sides of the parallelogram (rectangle) are constructed. The diagonal of the parallelogram (rectangle), which represents the resultant of the perpendicular components, is established based on the parallelogram method. The magnitude, direction and sense of the resultant are then determined using information found on this diagram. Summation of a system of forces using the method of perpendicular components is shown in Example 2-7.

Example 2-7: A concurrent-coplanar force system is applied at point P as shown below. Calculate the magnitude, direction and sense of the resultant force (F_R) using the method of perpendicular components.

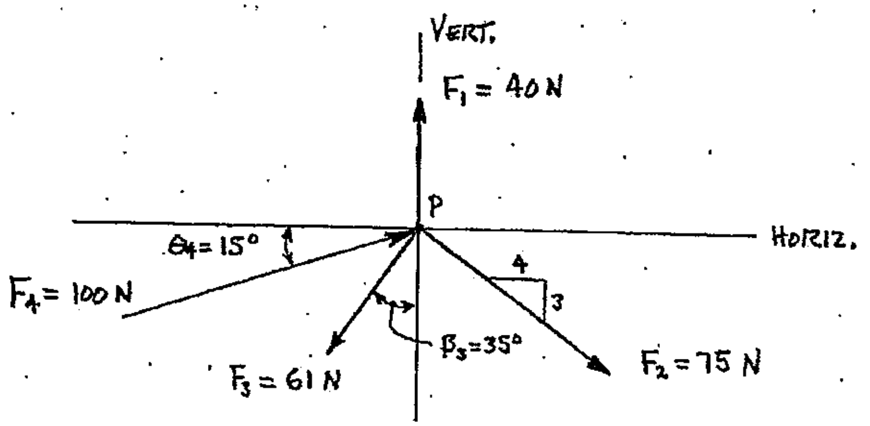

First, a working drawing (shown on following page) is developed with all information necessary for the solution. Using the concept of transmissibility, force F_4 has been moved along its line of action for clarity, but it is still applied at point P (it is "pulling" on point P rather than "pushing" on the point). Horizontal and vertical components of each force are shown, and the components have been constructed slightly off the axes and with half arrowheads for clarity. A sign convention that shows positive sense for each direction of the perpendicular axes is also constructed as part of the working diagram.

Example 2-7: (cont'd.)

INITIAL WORKING DIAGRAM:

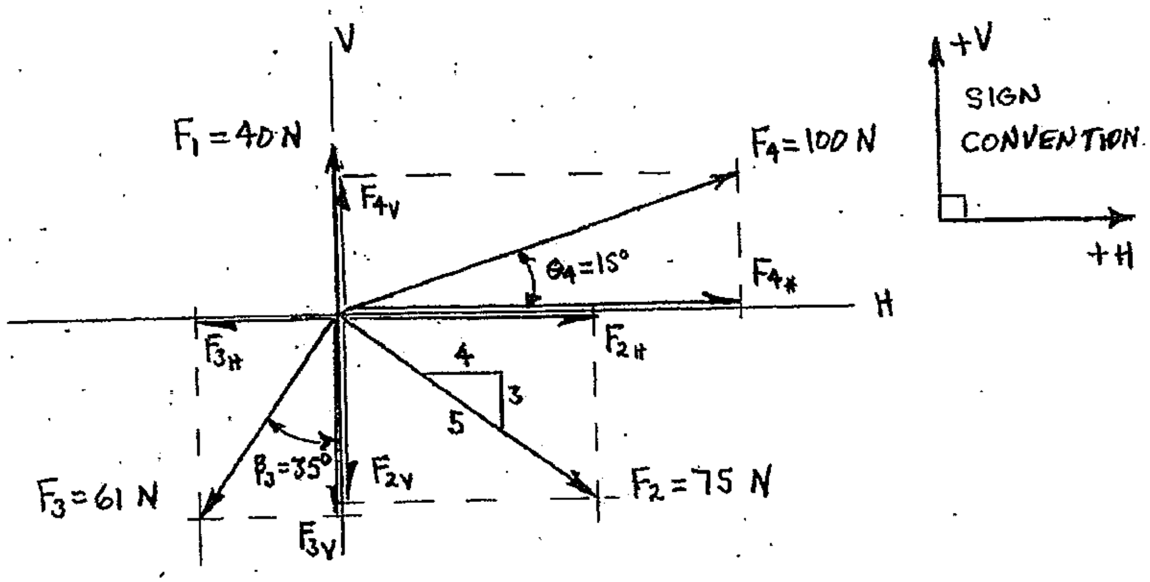

A summation of forces in each of the two perpendicular directions (in this case, horizontal and vertical) will be done to determine the perpendicular components of the resultant force. The initial statement used to declare that you are summing forces in a horizontal direction is shown below; the version on the left is the "complete" statement, while the version on the right is a "shorthand" version that is typically used when writing equations. Either version is read as follows: "the horizontal component of the resultant force (F_R) equals the sum, from i = 1 to i = n, of each individual (i) horizontal component or horizontal force".

$$F_{RH} = \sum_{i=1}^{i=n} F_{iH} \qquad\qquad F_{RH} = \sum F_H$$

The first two algebraic lines of a summation equation (in this case, developed to sum the horizontal components) are considered to be the heading; these two lines represent a "coupled pair", which means BOTH lines must be completely shown. The first line describes the type of problem (in this case, summation of forces). The second line is the expanded heading, and includes all of the possible horizontal components from the force system shown in the initial working diagram.

$$F_{RH} = \sum F_H$$
$$F_{RH} = \pm F_{1H} \pm F_{2H} \pm F_{3H} \pm F_{4H}$$

The next lines are used to define all of the possible horizontal components. Each individual component is listed, along with its equivalence and a direction/sense arrow that matches its direction and sense shown in the working diagram. Force F_1 is vertical and therefore has no horizontal component, so F_{1H} is shown as zero in the definition list.

Example 2-7: (cont'd.)

Where:

$$F_{1H} = 0$$

$$F_{2H} = \left(\frac{4}{5}\right)F_2 \quad \rightarrow$$

$$F_{3H} = F_3 \sin 35^0 \quad \leftarrow$$

$$F_{4H} = F_4 \cos 15^0 \quad \rightarrow$$

The next line in the equation is the initial algebraic statement, where the definitions (equivalences) from above are substituted for each component shown in the expanded heading (2nd line). Mathematical signs (+ or -) are specified for each term by referencing the component's direction/sense arrow to the sign convention established in the initial working diagram. The initial algebraic statement would be:

$$F_{RH} = +0 + \left(\frac{4}{5}\right)F_2 - F_3 \sin 35^0 + F_4 \cos 15^0$$

Algebraic development is done next (if required) to isolate the unknown on the left-hand side of the equals sign. For this example, no algebraic development is necessary. Algebraic development is followed by the initial numeric statement, where numeric values (with appropriate units) are substituted for all known algebraic terms. The initial numeric statement may be followed by numeric development (if necessary).

$$F_{RH} = +\left(\frac{4}{5}\right)(75\,N) - (61\,N)\left(\sin 35^0\right) + (100\,N)\cos 15^0$$

$$F_{RH} = +60.00\,N - 34.9882\,N + 96.5926\,N$$

The last two lines in the equation again represent a "coupled pair"; BOTH lines must be shown and BOTH must be complete. The first of these two lines represents the "numeric answer", and is a numeric value, with appropriate units, PRECEDED BY either a + or – sign as developed in the numeric solution. The sign (+ or -) is REQUIRED, since the sign is used to develop the "vector answer" shown on the next (last) line. The vector answer is a numeric value with appropriate units, followed by an arrow (vector symbol) that shows direction and sense. The sign (+ or -) from the numeric answer is compared to the working diagram's sign convention to determine the correct sense for the vector answer. In this case, the + sign in the numeric answer matches sense defined as "positive (+) to the right" in the sign convention.

$$F_{RH} = +121.604\,N$$

$$F_{RH} = \underline{\underline{121.604\,N \quad \rightarrow}}$$

Example 2-7: (cont'd.)

The complete equation for summation of forces in the horizontal direction is:

$$F_{RH} = \sum F_H$$

$$F_{RH} = \pm F_{1H} \pm F_{2H} \pm F_{3H} \pm F_{4H}$$

$$\underline{\text{Where}}: \quad F_{1H} = 0$$

$$F_{2H} = \left(\frac{4}{5}\right) F_2 \quad \rightarrow$$

$$F_{3H} = F_3 \sin 35^0 \quad \leftarrow$$

$$F_{4H} = F_4 \cos 15^0 \quad \rightarrow$$

$$F_{RH} = +0 + \left(\frac{4}{5}\right) F_2 - F_3 \sin 35^0 + F_4 \cos 15^0$$

$$F_{RH} = +\left(\frac{4}{5}\right)(75\,\text{N}) - (61\,\text{N})(\sin 35^0) + (100\,\text{N}) \cos 15^0$$

$$F_{RH} = +60.00\,\text{N} - 34.9882\,\text{N} + 96.5926\,\text{N}$$

$$F_{RH} = +121.604\,\text{N}$$

$$F_{RH} = \underline{\underline{121.604\,\text{N} \quad \rightarrow}}$$

Summation of forces in the vertical direction is done next to determine the vertical component of the resultant force:

$$F_{RV} = \sum F_V$$

$$F_{RV} = \pm F_{1V} \pm F_{2V} \pm F_{3V} \pm F_{4V}$$

$$\underline{\text{Where}}: \quad F_{1V} = F_1 \quad \uparrow$$

$$F_{2V} = \left(\frac{3}{5}\right) F_2 \quad \downarrow$$

$$F_{3V} = F_3 \cos 35^0 \quad \downarrow$$

$$F_{4V} = F_4 \sin 15^0 \quad \uparrow$$

$$F_{RV} = +F_1 - \left(\frac{3}{5}\right) F_2 - F_3 \cos 35^0 + F_4 \sin 15^0$$

$$F_{RV} = +(40\,\text{N}) - \left(\frac{3}{5}\right)(75\,\text{N}) - (61\,\text{N})(\cos 35^0) + (100\,\text{N}) \sin 15^0$$

$$F_{RV} = -29.0864\,\text{N}$$

$$F_{RV} = \underline{\underline{29.0864\,\text{N} \quad \downarrow}}$$

Example 2-7: (cont'd)

The second diagram is now constructed using the resultant's horizontal and vertical components. The components are placed tail-on-tail, and are used to construct (complete) a rectangular parallelogram. Next, the resultant (parallelogram's diagonal) is added to the diagram. The sense of the resultant can be determined because the components and the resultant must intersect with like parts (tail-on-tail-on-tail). The resultant's magnitude (F_R) and direction (θ_R) can be calculated as shown below.

<u>WORKING DIAGRAM FOR F_R AND Θ_R</u>:

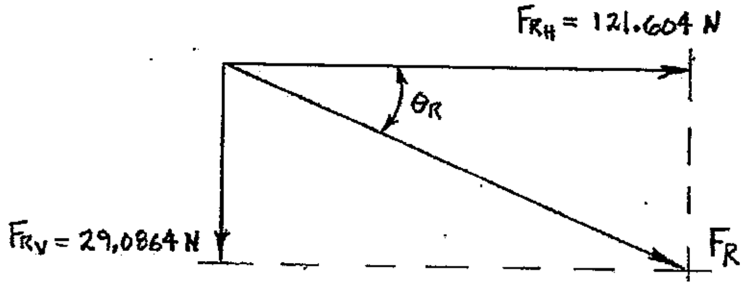

Calculate the magnitude of the resultant force using the Pythagorean Theorem:

$$F_R = \sqrt{F_{RH}^2 + F_{RV}^2}$$

$$F_R = \sqrt{(121.604\ \text{N})^2 + (29.0864\ \text{N})^2}$$

$$F_R = \underline{\underline{125.0342\ \text{N}}} \qquad \text{(magnitude only)}$$

Calculate the direction (θ_R) using the inverse tangent function:

$$\theta_R = \tan^{-1}\left(\frac{F_{RV}}{F_{RH}}\right)$$

$$\theta_R = \tan^{-1}\left(\frac{29.0864\ \text{N}}{121.604\ \text{N}}\right)$$

$$\theta_R = \underline{\underline{13.4518^0}}$$

<u>Answer:</u>

F_R = 125.0 N

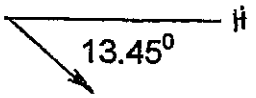

SUMMARY

A force is an influence (typically a push or pull along a linear path) that causes things to change in predictable ways. Forces have magnitude, direction, sense and a point of application, so forces are vector quantities and can be summed by either the parallelogram method of vector addition or the method of perpendicular components. The method of perpendicular components is normally used when finding the resultant of a system of three or more forces, since it provides a much more direct path to the resultant than does the parallelogram method. To find the resultant of two forces either method could be used.

FURTHER EXAMPLE PROBLEMS (solutions in GFSA format are on the following pages)

Example 2-8: Two forces act on point A as shown below. Calculate the resultant of the two forces using the parallelogram method.

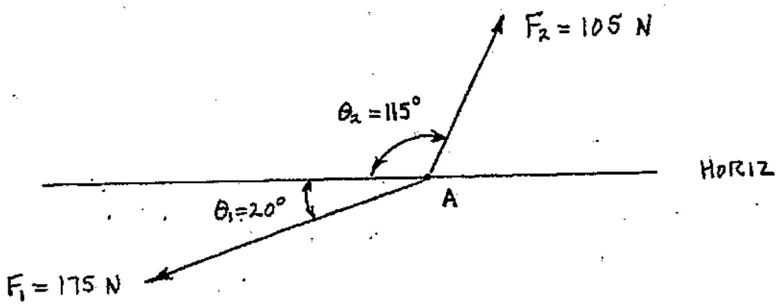

Example 2-9: Calculate the resultant of the five forces shown below. Use the method of perpendicular components.

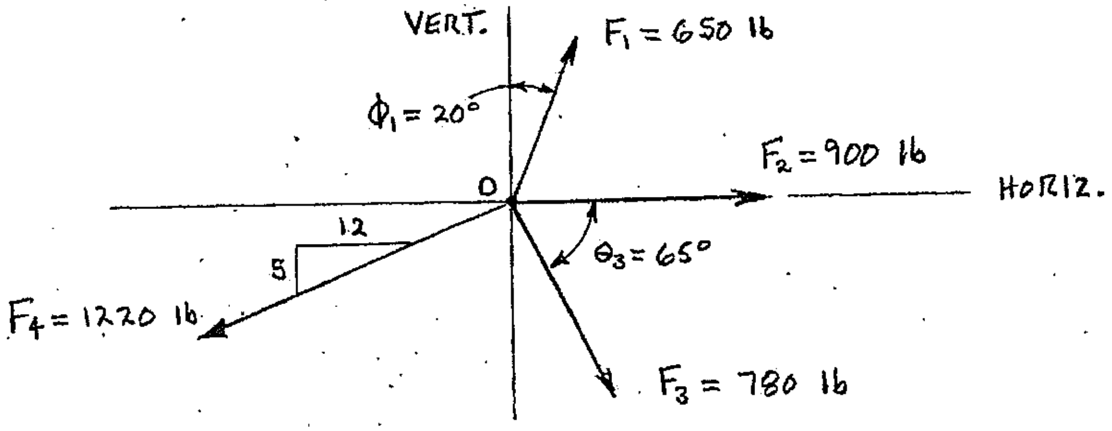

PROBLEM: EXAMPLE 2-8

GIVEN: TWO FORCES APPLIED AT POINT A AS SHOWN BELOW.

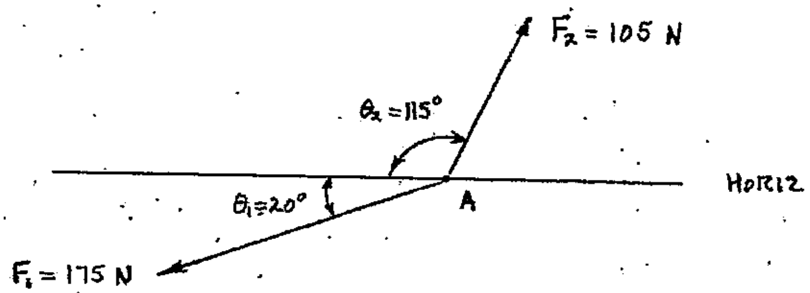

FIND: USE THE PARALLELOGRAM METHOD TO DETERMINE THE RESULTANT FORCE, F_R.

SOLUTION:

WORKING DIAGRAM:

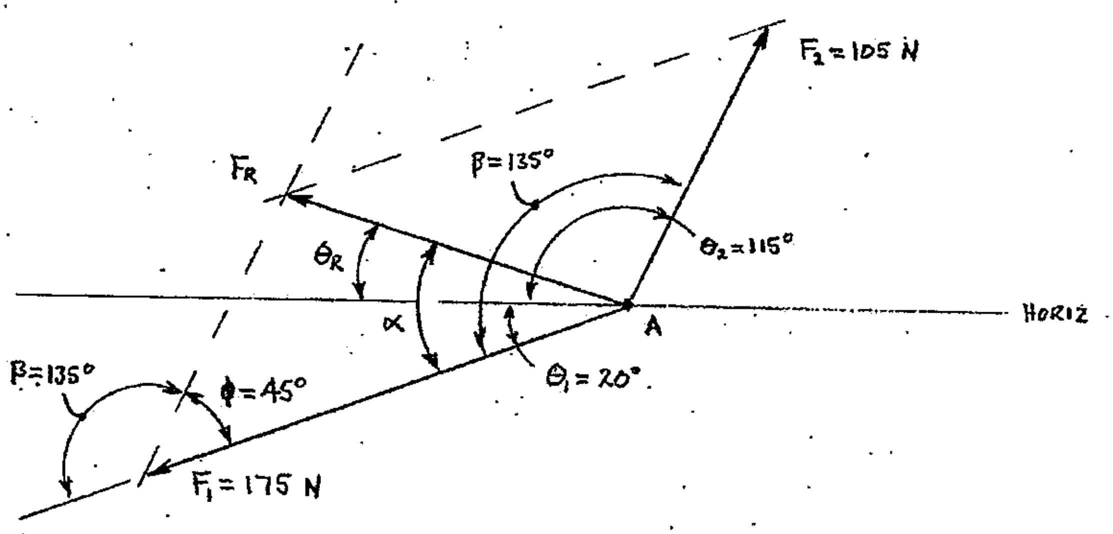

DETERMINE MAGNITUDE OF F_R USING LAW OF COSINES:

$$F_R^2 = F_1^2 + F_2^2 - 2F_1F_2\cos\phi$$

$$F_R = \sqrt{F_1^2 + F_2^2 - 2F_1F_2\cos\phi}$$

$$F_R = \sqrt{(175\text{ N})^2 + (105\text{ N})^2 - 2(175\text{ N})(105\text{ N})\cos 45°}$$

$$F_R = 125.155\text{ N}$$ (MAGNITUDE ONLY)

CONT'D.

PROBLEM: EXAMPLE 2-8 (CONT'D.)

DETERMINE ANGLE α USING LAW OF SINES:

$$\frac{\sin\alpha}{F_2} = \frac{\sin\phi}{F_R}$$

$$\sin\alpha = \left(\frac{F_2}{F_R}\right)\sin\phi$$

$$\alpha = \sin^{-1}\left[\left(\frac{F_2}{F_R}\right)\sin\phi\right]$$

$$\alpha = \sin^{-1}\left[\left(\frac{105\ N}{125.155\ N}\right)\sin 45^\circ\right]$$

$$\alpha = \underline{\underline{36.3868^\circ}}$$

SOLVE FOR ANGLE θ_R:

$$\theta_R = \alpha - \theta_1$$

$$\theta_R = 36.3868^\circ - 20^\circ$$

$$\theta_R = \underline{\underline{16.3868^\circ}}$$

ANSWER:

$F_R = 125.2\ N$ @ 16.39° (from H)

PROBLEM: EXAMPLE 2-9

GIVEN: THE CONCURRENT-COPLANAR FORCE SYSTEM SHOWN BELOW.

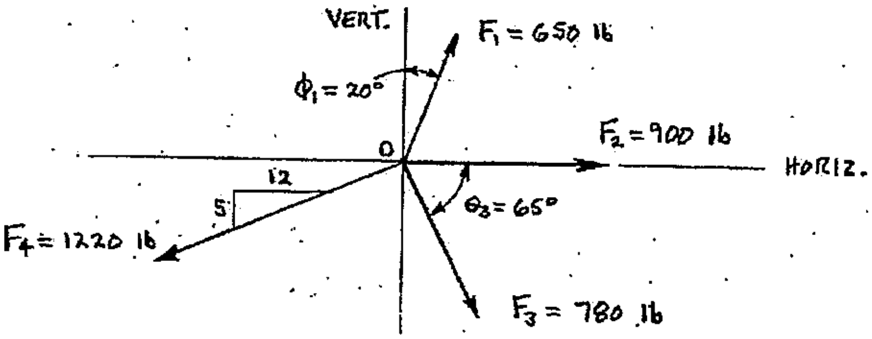

FIND: DETERMINE THE RESULTANT OF THE FORCE SYSTEM USING THE METHOD OF PERPENDICULAR COMPONENTS.

SOLUTION:

INITIAL WORKING DIAGRAM:

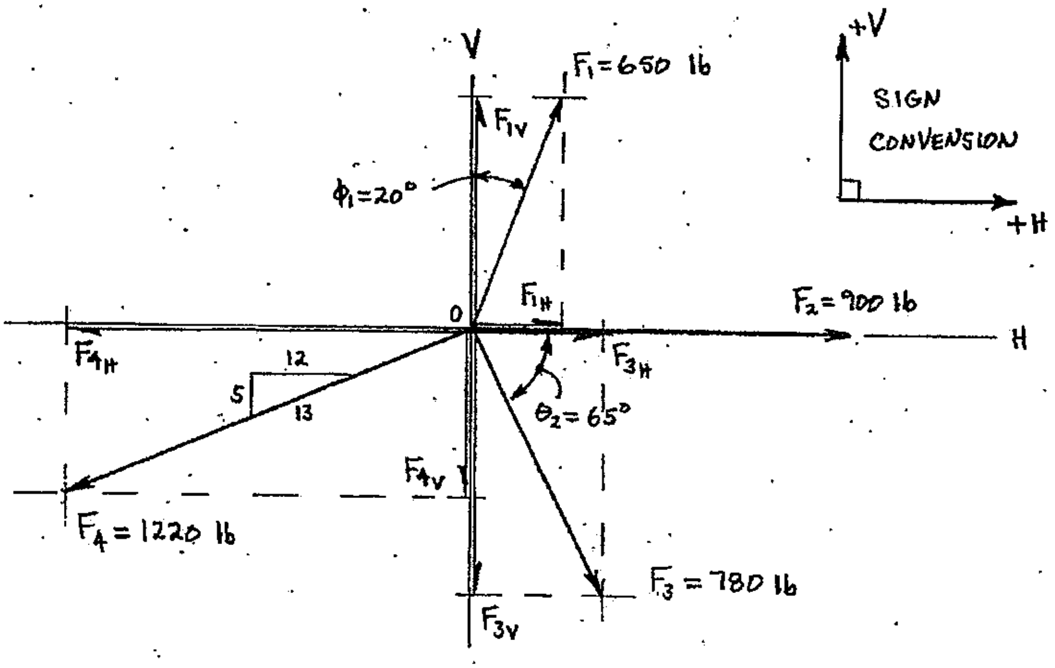

DETERMINE THE HORIZONTAL COMPONENT OF THE RESULTANT:

$$F_{R_H} = \Sigma F_H$$

$$F_{R_H} = \pm F_{1_H} \pm F_{2_H} \pm F_{3_H} \pm F_{4_H}.$$

CONT'D.

PROBLEM: EXAMPLE 2-9 (CONT'D.)

WHERE:
$F_{1H} = F_1 \sin 20° \rightarrow$

$F_{2H} = F_2 \rightarrow$

$F_{3H} = F_3 \cos 65° \rightarrow$

$F_{4H} = (12/13)\, F_4 \leftarrow$

$F_{R_H} = +F_1 \sin 20° + F_2 + F_3 \cos 65° - (12/13)\, F_4$

$F_{R_H} = +(650\ lb)(\sin 20°) + (900\ lb) + (780\ lb)(\cos 65°) - (12/13)(1220\ lb)$

$F_{R_H} = +222.313\ lb + 900\ lb + 329.642\ lb - 1126.154\ lb$

$F_{R_H} = +325.801\ lb$

$F_{R_H} = \underline{325.801\ lb \rightarrow}$

DETERMINE THE VERTICAL COMPONENT OF THE RESULTANT:

$F_{R_V} = \Sigma F_V$

$F_{R_V} = \pm F_{1V} \pm F_{2V} \pm F_{3V} \pm F_{4V}$

WHERE:
$F_{1V} = F_1 \cos 20° \uparrow$

$F_{2V} = 0$

$F_{3V} = F_3 \sin 65° \downarrow$

$F_{4V} = (5/13)\, F_4 \downarrow$

$F_{R_V} = +F_1 \cos 20° + \cancel{F_{2V}}^{\,0} - F_3 \sin 65° - (5/13)\, F_4$

$F_{R_V} = +(650\ lb)(\cos 20°) - (780\ lb)(\sin 65°) - (5/13)(1220\ lb)$

$F_{R_V} = +610.800\ lb - 706.920\ lb - 469.231\ lb$

$F_{R_V} = -565.351\ lb$

$F_{R_V} = \underline{565.351\ lb \downarrow}$

CONT'D.

PROBLEM: EXAMPLE 2-9 (CONT'D.)

WORKING DIAGRAM FOR F_R AND θ_R:

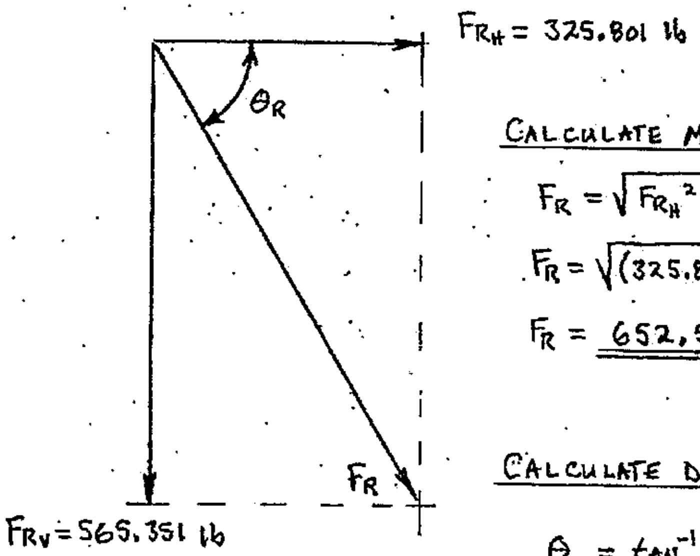

CALCULATE MAGNITUDE OF F_R:

$$F_R = \sqrt{F_{RH}^2 + F_{RV}^2}$$

$$F_R = \sqrt{(325.801 \text{ lb})^2 + (565.351 \text{ lb})^2}$$

$$F_R = \underline{652.509 \text{ lb}} \quad \text{(MAGNITUDE ONLY)}$$

CALCULATE DIRECTION, θ_R:

$$\theta_R = \tan^{-1}\left(\frac{F_{RV}}{F_{RH}}\right)$$

$$\phi_R = \tan^{-1}\left(\frac{565.351 \text{ lb}}{325.801 \text{ lb}}\right)$$

$$\phi_R = \underline{60.0460^\circ}$$

So: $F_R = 652.5$ lb @ 60.05°

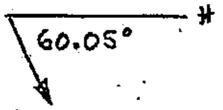

ANSWER:

$F_R = 652.5$ lb @ 60.05°

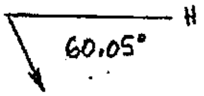

PRACTICE PROBLEMS

2.1 Calculate the resultant (magnitude, direction and sense) of the two forces shown below using the parallelogram method.

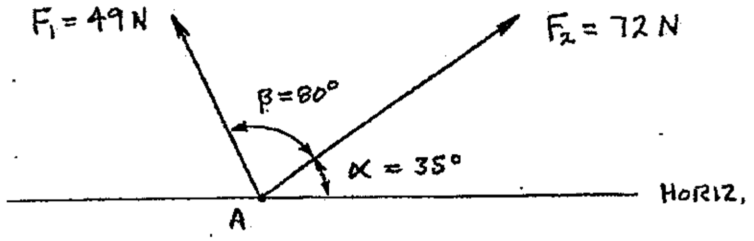

2.2 Two forces are applied at point O as shown below. Use the parallelogram method to determine the magnitude, direction and sense of the resultant force (F_R).

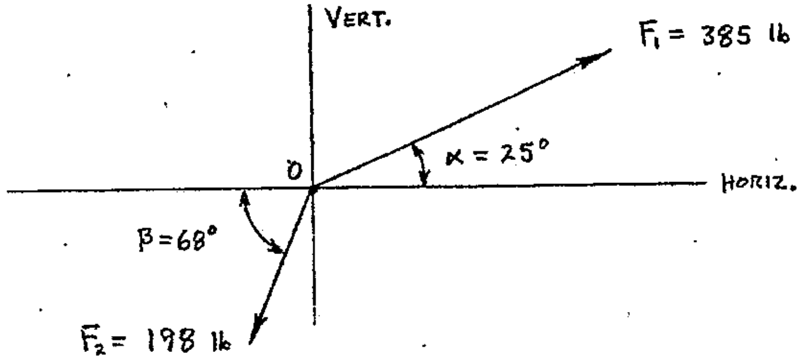

2.3 Calculate the resultant (magnitude, direction and sense) of the two forces shown below using the parallelogram method.

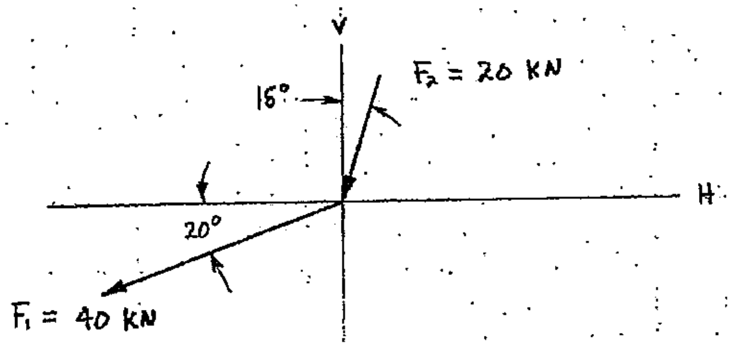

2.4 Three forces are applied at point O in the diagram shown below. Use the parallelogram method to determine the resultant of this force system.

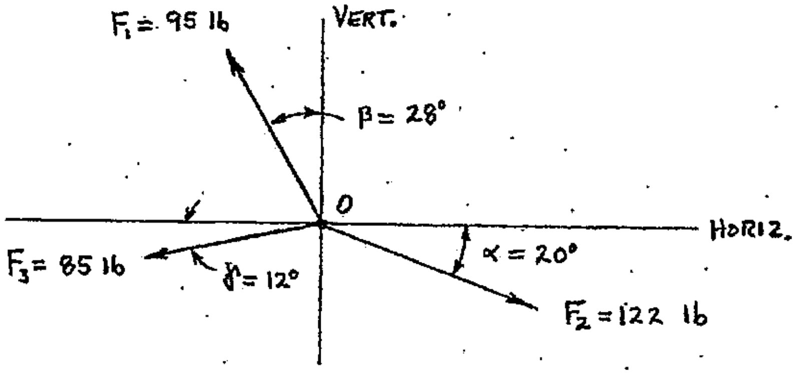

2.5 A known force (F_R) and two non-perpendicular axes (A and B) are shown below. Use the parallelogram method to resolve force F_R into two component forces (F_A and F_B) whose lines of action are collinear with axes A and B.

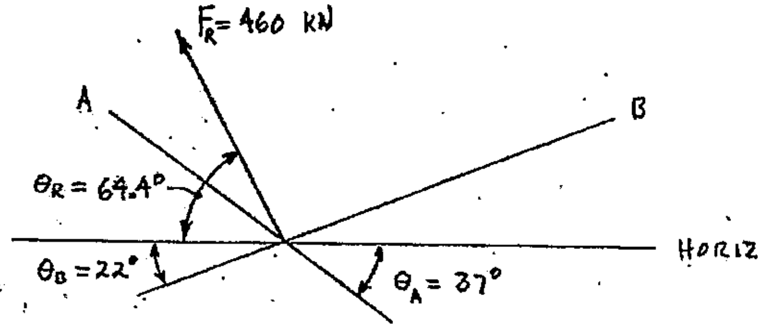

2.6 The resultant (F_R) of two forces, F_1 and F_2, is collinear with the horizontal axis as shown below. Use the parallelogram method to calculate the magnitude and direction (θ_2) of force F_2.

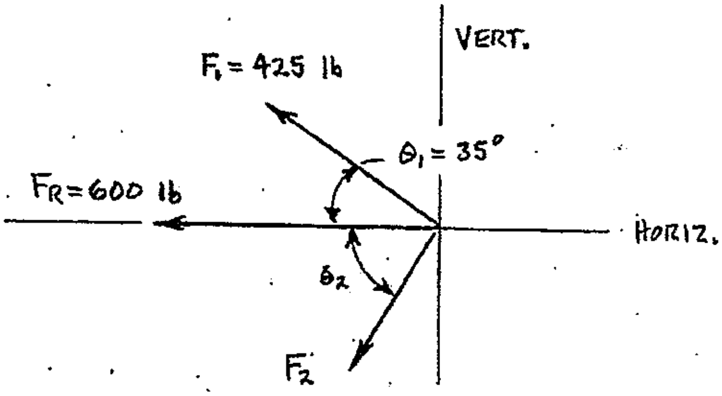

2.7 Two tugboats (A and B) are used to position a barge at the end of an automated loading dock. The barge must press against the dock with a resultant force (F_R) of 1000-lb, perpendicular to the dock, to trigger the automated mooring system. Tug B pulls with a force of 700-lb at the angle shown. Calculate the amount of force that must be provided by tug A, and its direction (angle ϕ). Use the parallelogram method, and assume that the force from each tug and the resultant force are concurrent at some point on the barge.

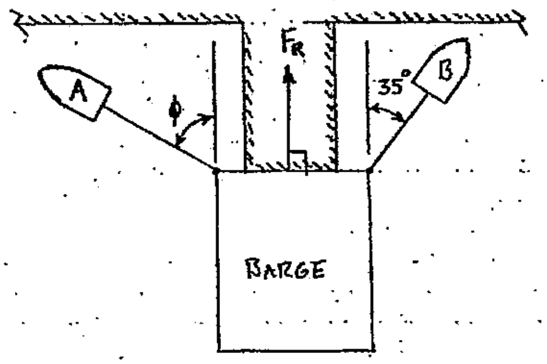

2.8 Two forces act on point A as shown below. Calculate the resultant force using the method of perpendicular components. You **must** set up your perpendicular axes such that the x-axis lies along the line of action of force F_2, and point A is the origin of the perpendicular axes.

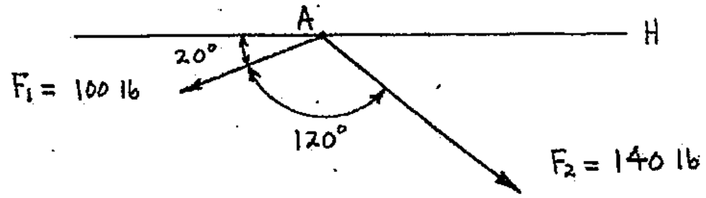

2.9 Calculate the resultant of the three forces shown below using the method of perpendicular components.

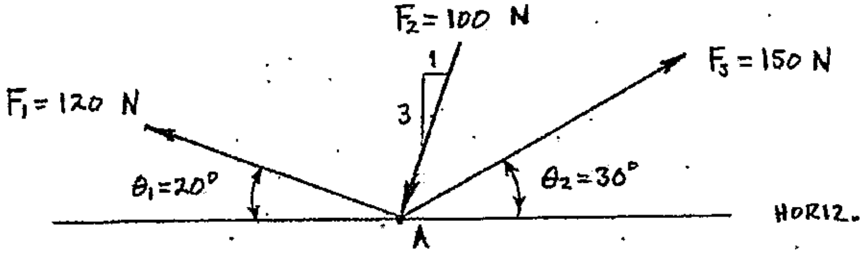

2.10 Two forces are applied at point A as shown in the diagram below. Calculate the resultant force using the method of perpendicular components.

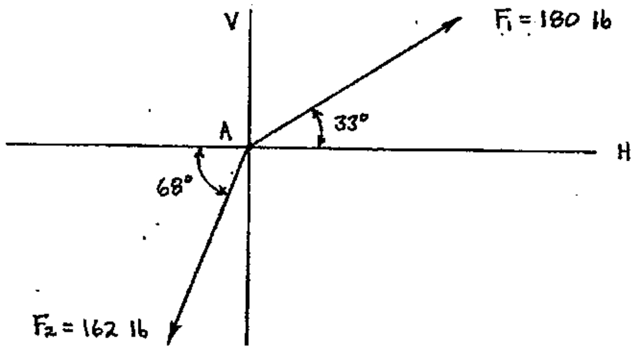

2.11 Calculate the resultant of the force system shown below using the method of perpendicular components.

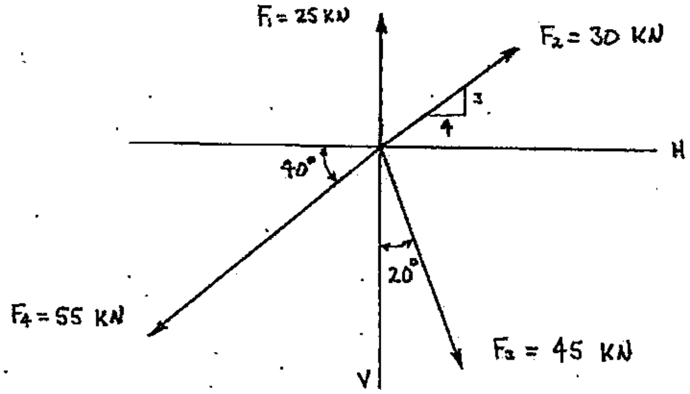

2.12 Calculate the resultant of the six forces shown below using the method of perpendicular components.

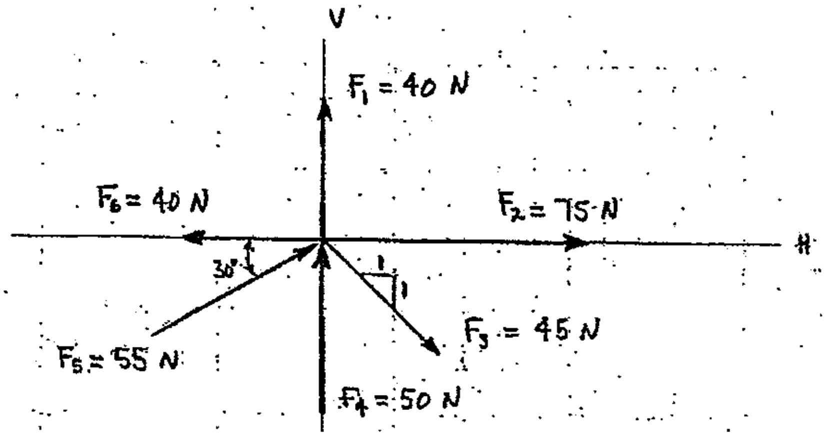

PRACTICE PROBLEMS

2.13 Use right triangle trig functions to determine the X and Y components for each of the two forces shown below. Report each component's direction with respect to horizontal.

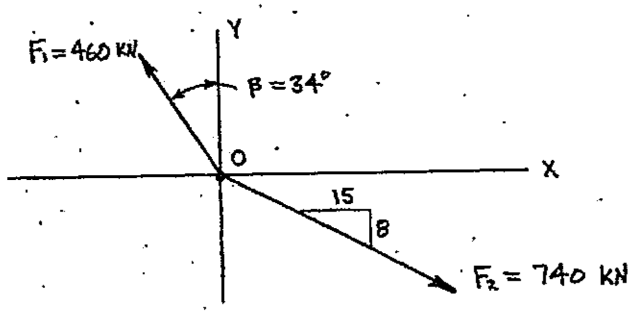

2.14 Use right triangle trig functions to determine the X and Y components for each of the forces shown below. Report each component's direction with respect to horizontal.

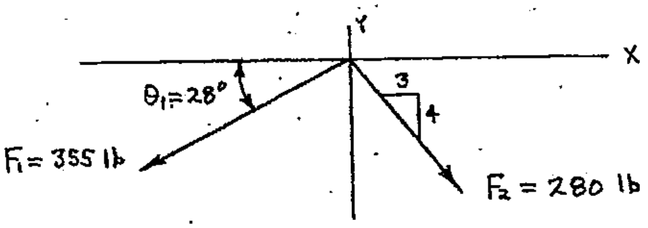

2.15 Use right triangle trig functions to determine the X and Y components of force F_1, and report each component's direction with respect to horizontal.

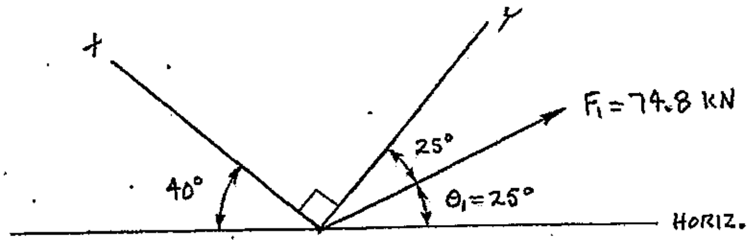

2.16 Use right triangle trig functions to determine the X and Y components of force F_1, and report each component's direction with respect to horizontal.

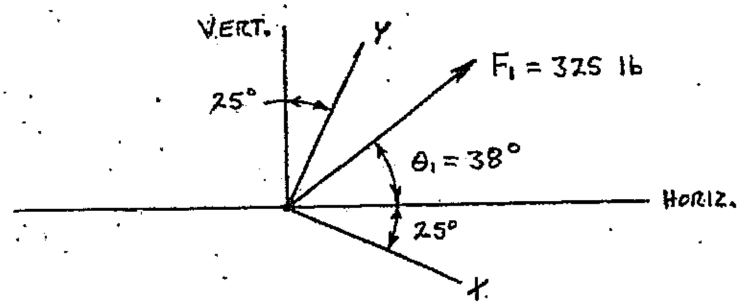

$\sin \angle = \frac{F_1 V}{F_1}$

$F_1 V = F_1 \sin \angle$

PRACTICE PROBLEMS

2.17 Use right triangle trig functions to determine the resultant, F_R, of the set of perpendicular components shown below. Report the resultant's direction with respect to horizontal.

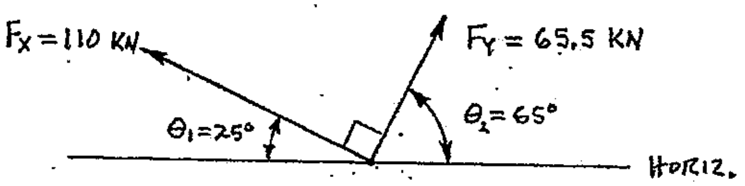

2.18 Use right triangle trig functions to determine the resultant, F_R, of the set of perpendicular components shown below. Report the resultant's direction with respect to horizontal.

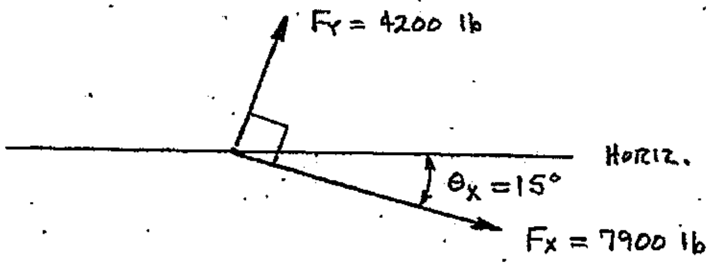

2.19 Use right triangle trig functions to determine the X and Y components of each force shown below. Report each of the component's direction with respect to horizontal.

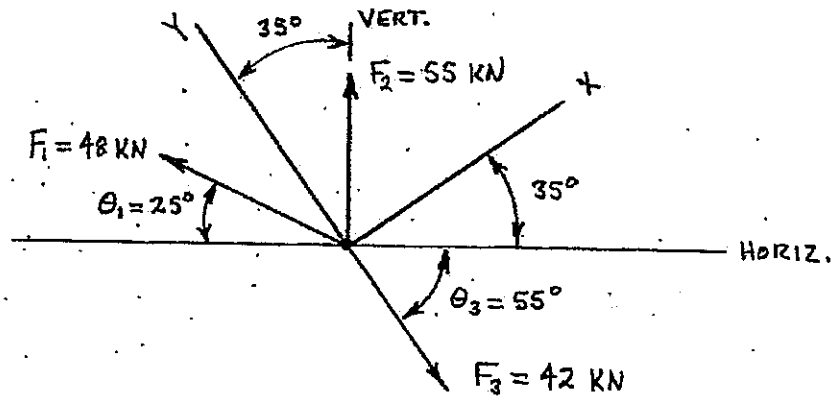

Chapter 3: Static Equilibrium of Concurrent-Coplanar Force Systems

Static Equilibrium

The principle of static equilibrium is based on Newton's Laws of Motion. From Newton's Laws, it can be stated that a body at rest, or moving at a constant velocity, is in a state of equilibrium. A body at rest would be in *static equilibrium*, based on some common definitions of the word "static" (at rest, or not active, moving or changing).

The term "equilibrium" could have any or all of the following definitions, depending on the particular context:

- A condition in which all acting influences are cancelled by others, resulting in a stable, unchanging system
- A balance between influences
- Equality of effects
- A condition of a system in which the resultant of all forces is zero

A concurrent-coplanar force system was defined in Chapter 2 as a two-dimensional force system where all forces come together at a common point. For our purposes, the point will be considered a particle.

So, *static equilibrium of a concurrent-coplanar force system* could be defined as a condition in which the summation of all forces acting on a particle at rest is equal to zero. The initial statement used to declare static equilibrium of a concurrent-coplanar force system is shown below; the version on the left is the "complete" statement, while the version on the right is a "shorthand" version that is typically used when writing equations. Either version is read as follows: "the sum of all of the individual forces, from i = 1 to i= n, is equal to zero".

$$\sum_{i=1}^{i=n} F_i = 0 \qquad\qquad \Sigma F = 0$$

If the sum of all the forces acting on a particle (a point) is zero, then the sum of the forces' components in each of two perpendicular directions would also be equal to zero. For two perpendicular axes labeled X and Y, the initial ("shorthand") statements for static equilibrium of the perpendicular components of a force system would be as follows:

$\Sigma F_X = 0$ (The sum of the individual X-components is equal to zero.)

$\Sigma F_Y = 0$ (The sum of the individual Y-components is equal to zero.)

There are an infinite number of concurrent-coplanar force systems that could be in static equilibrium. This chapter will concentrate on methods to determine the unknown force (or forces) required to maintain static equilibrium of a concurrent-coplanar system. Work here will be limited to static equilibrium of concurrent-coplanar systems with one, or no more than two, unknown forces.

The concurrent-coplanar force system shown in Figure 3-1A is not in static equilibrium, but could be in static equilibrium if one additional force were added to the system, as shown in Figure 3-1B. A typical problem statement for the system shown in Figure 3-1A could be: "Determine the single force (not shown) that must be applied at point P for the force system to be in static equilibrium". To solve this problem, the first requirement would be to construct a diagram of the original force system and then add to that diagram the unknown force (F_3) that would be required for static equilibrium (shown in Figure 3-1B). The unknown force must be added to the diagram such that its magnitude, direction and sense are all clearly shown (do NOT add the unknown force collinear to one of the perpendicular axes). It is VERY important to note that although F_3 was shown in Figure 3-1B with a particular magnitude (length), direction (θ_3) and sense (arrowhead), these characteristics are all ASSUMPTIONS at this point. The ACTUAL magnitude, direction and sense of force F_3 are unknown and must be determined through additional work.

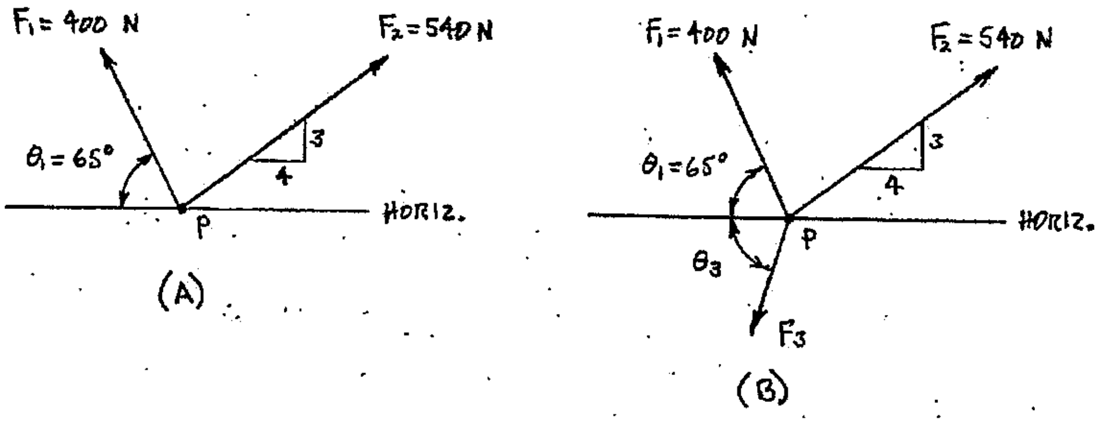

Figure 3-1 (A and B): Two concurrent-coplanar force systems

It is also common to be given only a diagram such as the one shown in Figure 3-1B, along with a problem statement similar to the following: "Determine the force F_3 required so that the force system shown in Figure 3-1B remains in static equilibrium". Again, it is VERY important to note that *even though force F_3 has been shown* on the given diagram, the only characteristic of F_3 that is known is its point of application (point P). Force F_3's magnitude, direction and sense have all been **ASSUMED**, and must be determine through further work.

The method of perpendicular components will be used when solving for a single unknown force required to maintain static equilibrium of a concurrent-coplanar force system, as shown in Example 3-1 (see following page).

Example 3-1: A concurrent-coplanar force system is shown below. Determine the force F_4 required so that the system remains in static equilibrium.

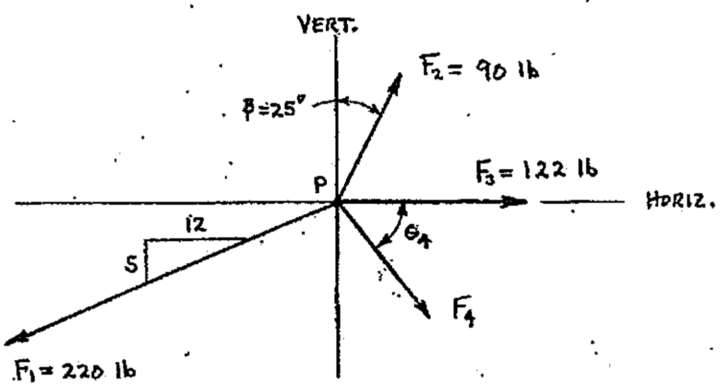

First, a working diagram is developed as shown below. Horizontal and vertical components of each force are shown (the components have been constructed slightly off the axes and with half arrowheads for clarity). The perpendicular components for the unknown force F_4 are constructed based on the <u>ASSUMED</u> magnitude, direction and sense of F_4 from the given diagram. So, in the initial working diagram, the direction and sense for components F_{4H} and F_{4V} are also ASSUMPTIONS. A sign convention that shows positive sense for each direction of the perpendicular axes (H and V) is also constructed as part of the working diagram.

<u>INITIAL WORKING DIAGRAM:</u>

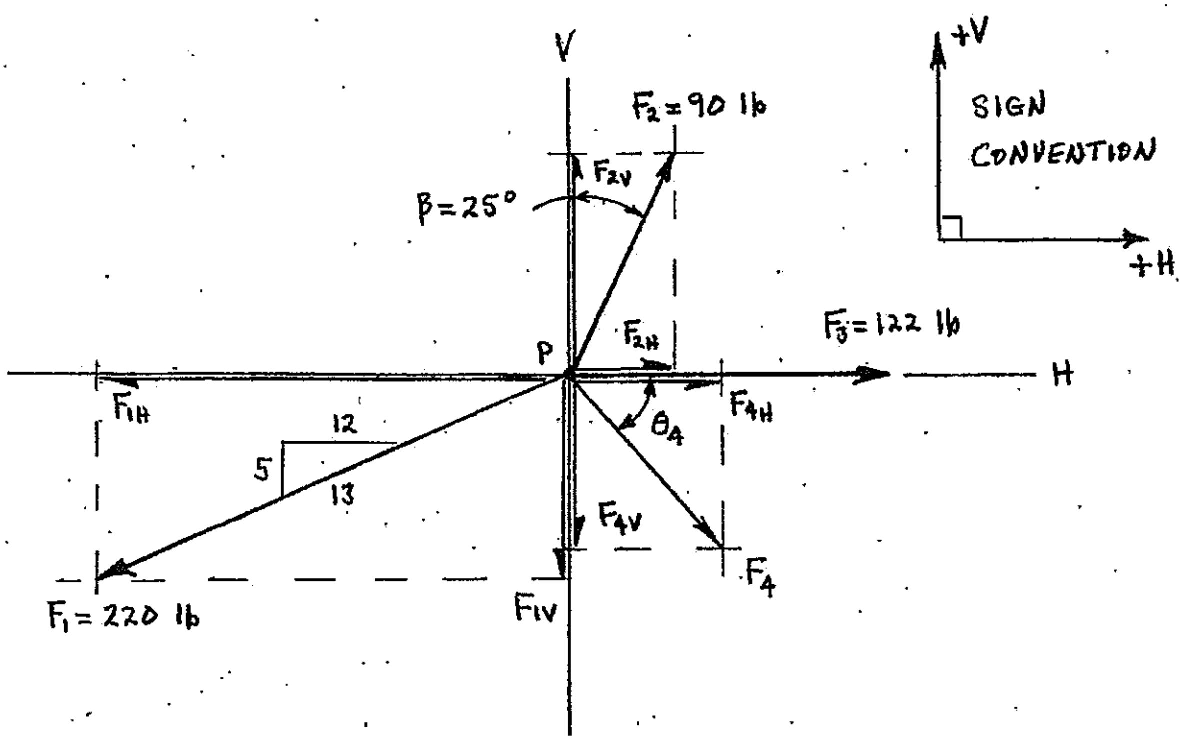

cont'd.

Example 3-1: (cont'd.)

Static equilibrium will now be applied to both of the perpendicular directions. For this example, static equilibrium will be applied first to the horizontal components, and then to the vertical components. The first two algebraic lines of an equilibrium equation are considered to be the heading; these two lines represent a "coupled pair", which means BOTH lines must be completely shown. The first line describes the type of problem (in this case, static equilibrium of forces in the horizontal direction). The second line is the expanded heading, and includes all of the possible horizontal components from the force system shown in the initial working diagram.

$$\Sigma F_H = 0$$
$$0 = \pm F_{1H} \pm F_{2H} \pm F_{3H} \pm F_{4H}$$

The next lines are used to define all of the possible horizontal components. Each individual component is listed, along with its equivalence and a direction/sense arrow that matches its direction and sense shown in the working diagram. Note that the ASSUMED sense (from the initial working diagram) for F_{4H} is shown with its equivalence. Also note that the equivalence for F_{4H} contains TWO unknowns: F_4 and angle θ_4.

<u>Where</u>: $F_{1H} = \left(\frac{12}{13}\right)F_1 \quad \leftarrow$

$F_{2H} = F_2 \sin\beta \quad \rightarrow$

$F_{3H} = F_3 \quad \rightarrow$

$F_{4H} = F_4 \cos\theta_4 \quad \rightarrow$

The next line in the equation is the initial algebraic statement, where the equivalences from above are substituted for the components shown in the expanded heading (2nd line). Mathematical signs (+ or -) are specified for each term by referencing the component's direction/sense arrow to the sign convention established in the initial working diagram. The equivalence for F_{4H} contains two terms, F_4 and $\cos\theta_4$, and both F_4 and θ_4 are <u>unknown</u>. Whenever BOTH terms in the equivalence of a component are unknown, <u>DO NOT SUBSTITUTE THE EQUIVALENCE</u> into the initial algebraic statement; instead, just include the symbol (in this case, F_{4H}) of the component in the initial algebraic statement.

$$0 = -\left(\frac{12}{13}\right)F_1 + F_2 \sin\beta + F_3 + F_{4H}$$

Algebraic development is done next to isolate the unknown on the left-hand side of the equals sign. The component F_{4H} is the only unknown in the equation shown above, so the algebraic development would return:

$$F_{4H} = +\left(\frac{12}{13}\right)F_1 - F_2 \sin\beta - F_3$$

Algebraic development is followed by the initial numeric statement, where numeric values (with appropriate units) are substituted for all known algebraic terms. The initial numeric statement may be followed by numeric development (if necessary).

$$F_{4H} = +\left(\frac{12}{13}\right)(220\ \text{lb}) - (90\ \text{lb})\left(\sin 25^0\right) - 122\ \text{lb}$$

$$F_{4H} = +203.077\ \text{lb} - 38.0356\ \text{lb} - 122\ \text{lb}$$

The last two lines in the equation again represent a "coupled pair"; BOTH lines must be shown and BOTH must be complete. The first of these two lines represents the "numeric answer", and is a numeric value, with appropriate units, PRECEDED BY either a + or – sign as developed in the numeric solution. The sign (+ or -) is REQUIRED, since the sign is used to develop the "vector answer" shown on the next (last) line. The vector answer is a numeric value with appropriate units, followed by an arrow (vector symbol) that shows direction and sense. For static equilibrium, the sign (+ or -) from the numeric answer indicates either agreement or disagreement with the corresponding ASSUMED SENSE shown in the initial working diagram. A plus (+) sign in the numeric answer indicates AGREEMENT with the assumed sense (+ indicates that the correct sense is the same as the assumed sense). A minus (-) sign in the numeric answer indicates DISAGREEMENT with the assumed sense (- indicates that the correct sense is OPPOSITE to the assumed sense). Since the numeric value calculated for F_{4H} in this static equilibrium equation was preceded by a + sign, the correct sense is the same as the sense assumed for F_{4H} in the initial working diagram.

$$F_{4H} = +43.0414\ \text{lb}$$

$$F_{4H} = \underline{\underline{43.0401\ \text{lb} \quad \rightarrow}}$$

F_{4H} as shown above represents the horizontal component of the unknown force, F_4.

NOTE: When applying static equilibrium, the sign (+ or -) in the numeric answer is NOT compared in any way to the sign convention.

The sign (+ or -) in the numeric answer of a static equilibrium equation is compared only to the ASSUMED SENSE of its corresponding force (or component) shown in the initial working diagram. The sign (+ or -) indicates either agreement (+) or disagreement (-) with the assumed sense shown in the initial working diagram.

Example 3-1: (cont'd.)

The complete equation developed when applying static equilibrium in the horizontal direction would be:

COUPLED PAIR

$$\Sigma F_H = 0$$ — HEADING; INDICATES EQUILIBRIUM SOLUTION

$$0 = \pm F_H \pm F_{2H} \pm F_{3H} \pm F_{4H}$$ — EXPANDED HEADING

<u>Where</u>:

$$F_{1H} = \left(\frac{12}{13}\right)F_1 \quad \leftarrow$$

$$F_{2H} = F_2 \sin\beta \quad \rightarrow$$

$$F_{3H} = F_3 \quad \rightarrow$$

$$F_{4H} = F_4 \cos\theta_4 \quad \rightarrow$$

DEFINING EQUIVALENCES

$$0 = -\left(\frac{12}{13}\right)F_1 + F_2 \sin\beta + F_3 + F_{4H}$$ ← INITIAL ALGEBRAIC STATEMENT

$$F_{4H} = +\left(\frac{12}{13}\right)F_1 - F_2 \sin\beta - F_3$$ ← ALGEBRAIC DEVELOPMENT

$$F_{4H} = +\left(\frac{12}{13}\right)(220\text{ lb}) - (90\text{ lb})(\sin 25^0) - 122\text{ lb}$$ ← INITIAL NUMERIC STATEMENT

$$F_{4H} = +203.077\text{ lb} - 38.0356\text{ lb} - 122\text{ lb}$$ ← NUMERIC DEVELOPMENT

+ SIGN INDICATES AGREEMENT WITH ASSUMED SENSE

COUPLED PAIR

$$F_{4H} = +\ 43.0414\text{ lb}$$ ← NUMERIC ANSWER

$$F_{4H} = \underline{\underline{43.0414\text{ lb} \ \rightarrow}}$$ ← VECTOR ANSWER

Static equilibrium is next applied in the vertical direction to develop the vertical component of force F_4:

$$\Sigma F_V = 0$$

$$0 = \pm F_{1V} \pm F_{2V} \pm F_{3V} \pm F_{4V}$$

<u>Where</u>:

$$F_{1V} = \left(\frac{5}{13}\right)F_1 \quad \downarrow$$

$$F_{2V} = F_2 \cos\beta \quad \uparrow$$

$$F_{3V} = 0$$

$$F_{4V} = F_4 \sin\theta_4 \downarrow$$

$$0 = -\left(\frac{5}{13}\right)F_1 + F_2 \cos\beta + 0 - F_{4V}$$

$$F_{4V} = -\left(\frac{5}{13}\right)F_1 + F_2 \cos\beta$$

<u>cont'd.</u>

Example 3-1: (cont'd.)

$$F_{4V} = -\left(\frac{5}{13}\right)(220\text{ lb}) + (90\text{ lb})(\cos 25^0)$$

— SIGN INDICATES DISAGREEMENT WITH ASSUMED SENSE SHOWN ON INITIAL WORKING DIAGRAM (PG. 3-3).

$$F_{4V} = -3.04768\text{ lb}$$

$$F_{4V} = \underline{\underline{3.04768\text{ lb}}} \uparrow$$

A second working diagram is now constructed using the horizontal and vertical components of force F_4. The components are placed tail-on-tail, and are used to construct (complete) a rectangular parallelogram. Next, force F_4 (parallelogram's diagonal) is added to the diagram. The sense of F_4 can be determined because the components and force F_4 must intersect with common parts (tail-on-tail-on-tail). The magnitude and direction of force F_4 can be calculated as shown below.

<u>WORKING DIAGRAM FOR F_4 AND Θ_4:</u>

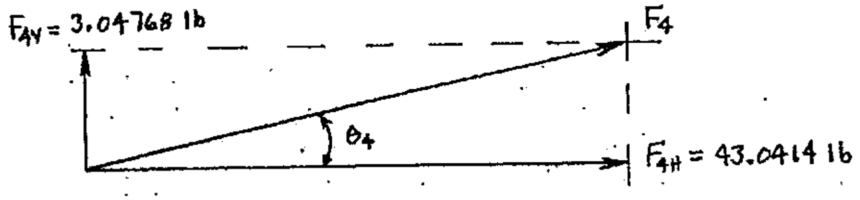

Calculate the magnitude of force F_4 using the Pythagorean Theorem:

$$F_4 = \sqrt{F_{4H}^{\ 2} + F_{4V}^{\ 2}}$$

$$F_4 = \sqrt{(43.0414\text{ lb})^2 + (3.04768\text{ lb})^2}$$

$$F_4 = \underline{\underline{43.1492\text{ lb}}} \qquad \text{(magnitude only)}$$

Calculate the direction (θ_4) using the inverse tangent function:

$$\theta_4 = \tan^{-1}\left(\frac{F_{4V}}{F_{4H}}\right)$$

$$\theta_4 = \tan^{-1}\left(\frac{3.04768\text{ lb}}{43.0414\text{ lb}}\right)$$

$$\theta_4 = \underline{\underline{4.05025^0}}$$

<u>Answer:</u>

$F_4 = 43.15$ lb

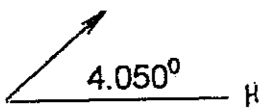

Figure 3-2 is a diagram of one joint (labeled as C) taken from a much larger truss. Four individual truss members are fastened together at point C, and are oriented as shown. Force F_3 is being transmitted through a truss member that is vertical. Since a force is being transmitted through each truss member, and all truss members come together at a common point (joint C), this would be an example of a concurrent-coplanar force system.

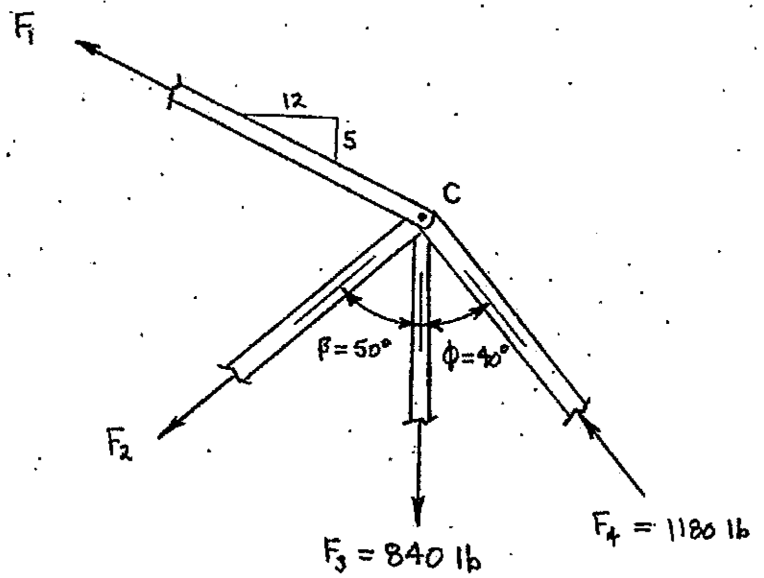

Figure 3-2 Diagram of joint C, taken from a truss

The magnitude, direction and sense are known for forces F_3 and F_4. Forces F_1 and F_2 have unknown magnitude and A SENSE HAS BEEN ASSUMED for these two forces (the true sense of F_1 and F_2 are unknown at this time). However, because the position of each truss member is fixed, and the entire truss is considered to be in static equilibrium, the *directions for forces F_1 and F_2 are known* and will be used when solving for forces F_1 and F_2.

The method of perpendicular components will be used when solving for two unknown forces that are required to maintain static equilibrium of a concurrent-coplanar force system, as shown in Example 3-2 (see following page).

Example 3-2: One joint (joint C) from a truss is oriented and loaded as shown below. Force F_3 is transmitted through a vertical truss member. Determine the forces F_1 and F_2 that are required to maintain static equilibrium.

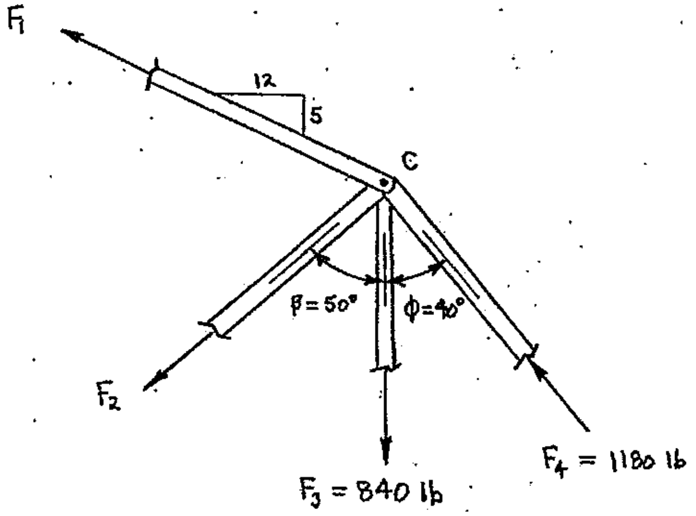

First, a working diagram is developed as shown below. Since Force F_3 is vertical, it will be convenient to use vertical and horizontal perpendicular axes. The horizontal and vertical components of each force are shown (the components have been constructed slightly off the axes and with half arrowheads for clarity). The perpendicular components for the unknown forces F_1 and F_2 are constructed based on their <u>ASSUMED</u> magnitude and sense from the given diagram. So, in the initial working diagram, the sense for components F_{1V}, F_{1H}, F_{2H} and F_{2V} are also ASSUMPTIONS. A sign convention that establishes positive sense for each direction of the perpendicular axes (H and V) is also constructed as part of the working diagram.

<u>INITIAL WORKING DIAGRAM:</u>

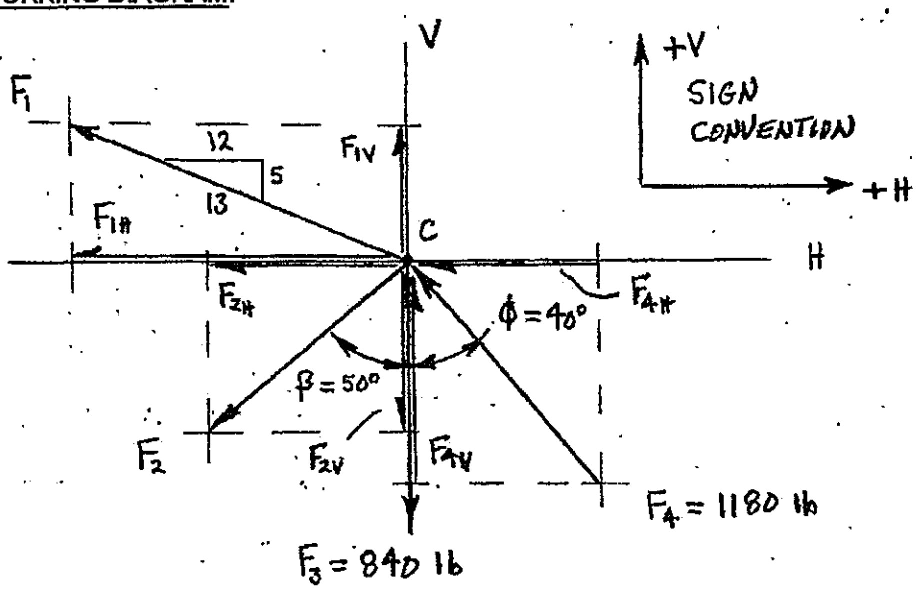

cont'd.

Example 3-2: (cont'd.)

Static equilibrium will now be applied to both of the perpendicular directions. For this example, static equilibrium will be applied first to the horizontal components, and then to the vertical components. The first two algebraic lines of an equilibrium equation are considered to be the heading; these two lines represent a "coupled pair", which means BOTH lines must be completely shown. The first line describes the type of problem (in this case, static equilibrium of forces in the horizontal direction). The second line is the expanded heading, and includes all of the possible horizontal components from the force system shown in the initial working diagram.

$$\Sigma F_H = 0$$
$$0 = \pm F_{1H} \pm F_{2H} \pm F_{3H} \pm F_{4H}$$

The next lines are used to define all of the possible horizontal components. Each individual component is listed, along with its equivalence and a direction/sense arrow that matches its direction and sense shown in the working diagram. Note that the ASSUMED sense (from the initial working diagram) for F_{1H} and F_{2H} is shown with its equivalence.

$$\underline{\text{Where}}: \quad F_{1H} = \left(\frac{12}{13}\right)F_1 \quad \leftarrow$$
$$F_{2H} = F_2 \sin\beta \quad \leftarrow$$
$$F_{3H} = 0$$
$$F_{4H} = F_4 \sin\phi \quad \leftarrow$$

The next line in the equation is the initial algebraic statement, where the equivalences from above are substituted for the components shown in the expanded heading (2nd line). Mathematical signs (+ or -) are specified for each term by referencing the component's direction/sense arrow to the sign convention established in the initial working diagram. Remember, whenever BOTH terms in the equivalence of a component are unknown, DO NOT SUBSTITUTE THE EQUIVALENCE into the initial algebraic statement; instead, just include the symbol of the component in the initial algebraic statement. HOWEVER, the equivalences for components F_{1H} and F_{2H} have only one unknown term each (their magnitudes) since the directions of F_{1H} and F_{2H} are known. Whenever a component's equivalence contains only ONE UNKNOWN, *the equivalence* should be substituted into the initial algebraic statement, as shown below.

$$0 = -\left(\frac{12}{13}\right)F_1 - F_2 \sin\beta + 0 - F_4 \sin\phi \qquad \text{(Eq 1)}$$

Since the initial algebraic statement had more that one unknown (F_1 and F_2), a direct solution is not possible at this time. The initial algebraic statement was labeled as Equation 1 (Eq. 1) for future reference. If the initial algebraic statement had contained only one unknown, the equation would have been solved for that unknown.

Example 3-2: (cont'd.)

Static equilibrium is now applied to the second (in this case, vertical) direction:

$$\Sigma F_V = 0$$

$$0 = \pm F_{1V} \pm F_{2V} \pm F_{3V} \pm F_{4V}$$

<u>Where</u>: $F_{1V} = \left(\frac{5}{13}\right) F_1 \quad \uparrow$

$F_{2V} = F_2 \cos\beta \quad \downarrow$

$F_{3V} = F_3 \quad \downarrow$

$F_{4V} = F_4 \cos\phi \quad \uparrow$

$$0 = +\left(\frac{5}{13}\right) F_1 - F_2 \cos\beta - F_3 + F_4 \cos\phi \qquad \text{(Eq. 2)}$$

Again, there are two unknowns (F_1 and F_2) in the initial algebraic statement, so the equation will not have a direct solution; this algebraic statement was labeled Equation 2 (Eq. 2) for future reference.

There are now two equations (Eq. 1 and Eq. 2) that have the same two unknowns, F_1 and F_2. A set of two equations with the same two unknowns can be solved by several methods; two of the more common techniques are the method of substitution and the coefficient method. In the substitution method, one of the equations is solved in terms of one unknown; the result is then substituted into the second equation and the second equation solved for its now single unknown. When using the coefficient method, the coefficients of one of the unknowns are deliberately modified in both equations, which results in two new equations that have identical coefficients (but with opposite sign) for one of the unknowns. The two new equations are then added together (like terms are added), which eliminates one of the unknowns and allows a solution for the other unknown. In either method, once one unknown is found, it can be back-substituted into either of the original equations to find the second unknown.

It is important to note that you may only need to solve for <u>ONE</u> of the unknowns. If the requirement for Example 3-2 had been to solve for only F_2, then F_1 should be deliberately eliminated when completing the simultaneous solution of the two equations. However, the requirement for Example 3-2 is to solve for both F_1 and F_2, so it will not matter which is found first.

The coefficient method will be used to develop a simultaneous solution for Equations 1 and 2. Cross-multiplication of each original equation (Eq. 1 and Eq. 2) by the coefficients of the F_1 term will cause the resulting coefficients of F_1 to be the same in each equation, but with opposite sign. When the resulting equations are added (adding like terms), the F_1 terms will sum to zero (and be eliminated) and a solution for F_2 will then be possible.

Example 3-2: (cont'd.)

So, multiply Eq. 1 by the coefficient of F_1 from Eq. 2, and multiply Eq. 2 by the coefficient of F_1 from Eq. 1; this will result in two new equations (Eq. 1B and Eq. 2B).

$$\text{Eq 1:} \quad \left[0=-\left(\frac{12}{13}\right)F_1 - F_2\sin\beta + 0 - F_4\sin\phi\right]\left(\frac{5}{13}\right)$$

$$\text{Eq 2:} \quad \left[0=+\left(\frac{5}{13}\right)F_1 - F_2\cos\beta - F_3 + F_4\cos\phi\right]\left(\frac{12}{13}\right)$$

$$0=-\left(\frac{5}{13}\right)\left(\frac{12}{13}\right)F_1-\left(\frac{5}{13}\right)F_2\sin\beta+0-\left(\frac{5}{13}\right)F_4\sin\phi \qquad \text{(Eq 1B)}$$

$$0=+\left(\frac{12}{13}\right)\left(\frac{5}{13}\right)F_1-\left(\frac{12}{13}\right)F_2\cos\beta-\left(\frac{12}{13}\right)F_3+\left(\frac{12}{13}\right)F_4\cos\phi \qquad \text{(Eq 2B)}$$

Equations 1B and 2B can now be added together (adding like terms). The F_1 term will drop out, and a solution can be found for F_2. Remember, this is still a static equilibrium solution, so the sign (+ or -) shown with the numeric answer will be compared to the assumed sense for F_2 as shown in the initial working diagram.

$$0=-\left(\frac{5}{13}\right)\left(\frac{12}{13}\right)F_1-\left(\frac{5}{13}\right)F_2\sin\beta+\quad 0\quad-\left(\frac{5}{13}\right)F_4\sin\phi \qquad \text{(Eq 1B)}$$

$$0=+\left(\frac{12}{13}\right)\left(\frac{5}{13}\right)F_1-\left(\frac{12}{13}\right)F_2\cos\beta-\left(\frac{12}{13}\right)F_3+\left(\frac{12}{13}\right)F_4\cos\phi \qquad \text{(Eq 2B)}$$

$$0=0-F_2\left[\left(\frac{5}{13}\right)\sin\beta+\left(\frac{12}{13}\right)\cos\beta\right]-\left(\frac{12}{13}\right)F_3+F_4\left[-\left(\frac{5}{13}\right)\sin\phi+\left(\frac{12}{13}\right)\cos\phi\right]$$

$$F_2=\frac{-\left(\frac{12}{13}\right)F_3+F_4\left[-\left(\frac{5}{13}\right)\sin\phi+\left(\frac{12}{13}\right)\cos\phi\right]}{+\left(\frac{5}{13}\right)\sin\beta+\left(\frac{12}{13}\right)\cos\beta}$$

$$F_2=\frac{-\left(\frac{12}{13}\right)(840\text{ lb})+(1180\text{ lb})\left[-\left(\frac{5}{13}\right)\sin 40^0+\left(\frac{12}{13}\right)\cos 40^0\right]}{+\left(\frac{5}{13}\right)\sin 50^0+\left(\frac{12}{13}\right)\cos 50^0}$$

$$F_2=-262.0706\text{ lb}$$

$$F_2=\underline{\underline{262.0706\text{ lb}}}$$

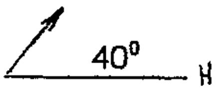

cont'd.

Example 3-2: (cont'd.)

The value found for F_2 can now be substituted into either Eq. 1 or Eq. 2 (or both, as a check) to solve for F_1. **HOWEVER**, you must *substitute the* *__entire__* *numeric answer* for F_2, INCLUDING THE SIGN generated in the numeric solution for F_2, since the original equilibrium equations were written based on the ASSUMED SENSES shown in the initial working diagram.

Substituting $F_2 = -262.0706$ lb into Eq. 1:

$$0 = -\left(\frac{12}{13}\right)F_1 - F_2 \sin\beta + 0 - F_4 \sin\phi \qquad \text{(Eq 1)}$$

$$F_1 = \frac{-F_2 \sin\beta - F_4 \sin\phi}{\left(\frac{12}{13}\right)}$$

$$F_1 = \frac{-(-262.0706 \text{ lb})(\sin 50^0) - (1180 \text{ lb})(\sin 40^0)}{\left(\frac{12}{13}\right)}$$

$$F_1 = -604.209 \text{ lb}$$

$$F_1 = \underline{\underline{604.209 \text{ lb}}}$$

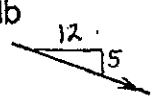

Or, substituting F2 = - 262.0706 lb into Eq. 2:

$$0 = +\left(\frac{5}{13}\right)F_1 - F_2 \cos\beta - F_3 + F_4 \cos\phi \qquad \text{(Eq 2)}$$

$$F_1 = \frac{+F_2 \cos\beta + F_3 - F_4 \cos\phi}{\left(\frac{5}{13}\right)}$$

$$F_1 = \frac{+(-262.0706 \text{ lb})\cos 50^0 + (840 \text{ lb}) - (1180 \text{ lb})\cos 40^0}{\left(\frac{5}{13}\right)}$$

$$F_1 = -604.209 \text{ lb}$$

$$F_1 = \underline{\underline{604.209 \text{ lb}}}$$

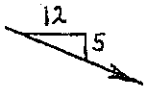

(same as found above)

__Answer:__

$F_1 = 604.2$ lb

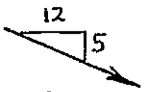

$F_2 = 262.1$ lb

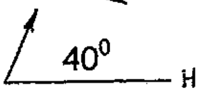

CABLES, AND CABLE SYSTEMS

A cable is a "rope" typically made of twisted steel strands. Cables are structural elements that can only be loaded in tension. So, for any given length of loaded cable, each end of the cable is being "pulled" (hence, the saying, "You can't push on a rope").

Figure 3-3 shows a system of three cables that are supporting a weight (W) with the cables oriented as shown. Two of the cables are attached to fixed walls on the left (A) and right (B). All three cables are connected at point C; the third cable extends vertically downward from point C to the weight. Assuming that the cables are of sufficient strength, the cable system will remain in static equilibrium in the position shown.

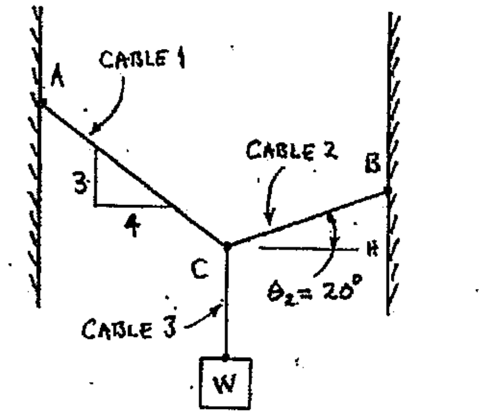

FIGURE 3-3 A cable system

Since the three cables shown in Figure 3-3 are all connected at a common location (point C), the cable system would represent a concurrent-coplanar force system and could be modeled by the working diagram shown in Figure 3-4. Since cables can only be loaded in tension, each cable must PULL on point C (the tails for each force are applied at point C, so all forces are shown as pulling on that point). The tension force in a cable will be assumed to be CONSTANT throughout the length of the cable. The tension in cable 3 will be equal to the weight, W; this will be true for any weight hanging freely (vertically) on a single cable (weight is always modeled as a force with vertical line of action and downward sense). Force components have been left off this initial working diagram for clarity.

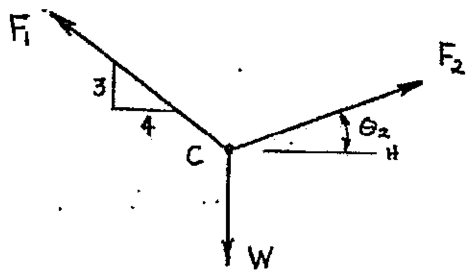

Figure 3-4 Working diagram of the cable system shown in Figure 3-3

The cable system shown in Figure 3-5 has five individual cables. Cable 1 extends from point B to weight W_1, and cable 2 extends from point C to weight W_2. Cable 3 is connected to a fixed wall at point A and extends to B. Cable 4 extends from B to C, and cable 5 is fixed to a wall at D and extends to C. Weights W_1 and W_2 are such that the system is in equilibrium in the position shown.

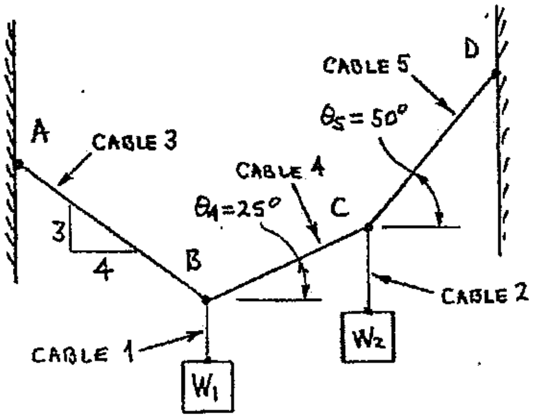

Figure 3-5 A cable system supporting two weights, W_1 and W_2.

The cable system shown above is NOT a concurrent-coplanar force system, since the force from each weight and the tension forces in the cables do not all pass through ONE common point. However, the original cable system could be broken up into two discreet concurrent-coplanar force systems; one system for point B and another for point C, as shown in Figure 3-6.

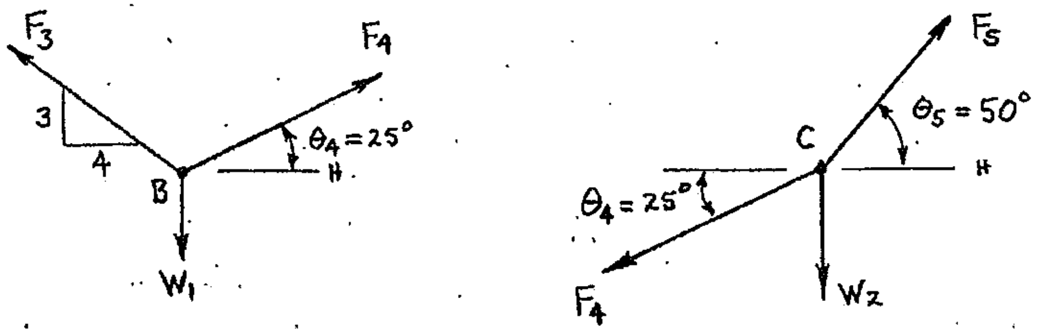

Figure 3-6 Individual working diagrams for each discreet concurrent-coplanar force system within the cable system shown in Figure 3-5.

Force F_4 appears in both working diagrams, and must have the same magnitude since the tension in a cable is assumed constant throughout its length. If a magnitude is found for F_4 when working with one of the diagrams, that magnitude can then be transferred to and used in the other diagram. However, you must remember that cable forces are always in tension, so F_4 must be shown as "pulling" on point B in the left diagram, and then pulling on point C in the right diagram; force F_4 has the same effect on either point. An example of working with cable systems is described within Example 3-3 (following page).

Example 3-3: The cable system shown below is in static equilibrium. The weight W_2 = 85 lb. Determine the weight of W_1 required so that the system remains in the position shown. Also determine the force acting on the wall at point A.

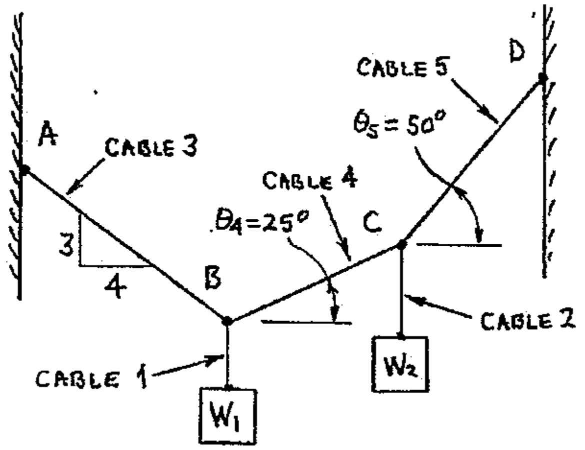

The cable system shown above can be broken into two discreet concurrent-coplanar force systems; one system for the forces concurrent at point B, and another system for the forces concurrent at point C. Although a working diagram for either system could be drawn first, it is reasonable to always start with the working diagram that has the most *known* information, or the *fewest unknowns* (in either case, that would be the system of forces that passes through point C for this example).

<u>INITIAL WORKING DIAGRAM</u>: (Forces concurrent at point C).

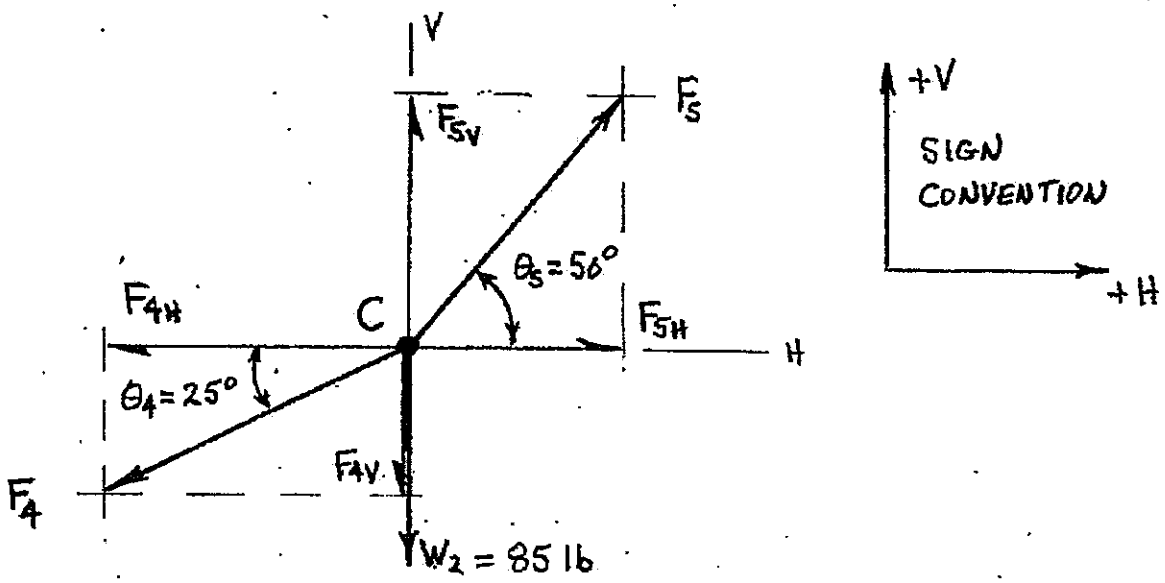

<u>cont'd.</u>

Example 3-3: (cont'd.)

Static equilibrium will be applied first in the horizontal direction:

$$\Sigma F_H = 0$$

$$0 = \pm W_{2H} \pm F_{4H} \pm F_{5H}$$

Where: $W_{2H} = 0$

$F_{4H} = F_4 \cos\theta_4 \quad \leftarrow$

$F_{5H} = F_5 \cos\theta_5 \quad \rightarrow$

$$0 = +0 - F_4 \cos\theta_4 + F_5 \cos\theta_5$$

$$F_5 = \frac{+F_4 \cos\theta_4}{\cos\theta_5} \qquad \text{(Eq.1)}$$

Next, static equilibrium is applied in the vertical direction:

$$\Sigma F_V = 0$$

$$0 = \pm W_{2V} \pm F_{4V} \pm F_{5V}$$

<u>Where</u>: $W_{2V} = W_2 \quad \downarrow$

$F_{4V} = F_4 \sin\theta_4 \quad \downarrow$

$F_{5V} = F_5 \sin\theta_5 \quad \uparrow$

$$0 = -W_2 - F_4 \sin\theta_4 + F_5 \sin\theta_5$$

<u>And</u>: $F_5 = \dfrac{+F_4 \cos\theta_4}{\cos\theta_5}$

$$0 = -W_2 - F_4 \sin\theta_4 + \left(\frac{+F_4 \cos\theta_4}{\cos\theta_5}\right)\sin\theta_5$$

$$+F_4 \sin\theta_4 - F_4\left(\frac{\cos\theta_4}{\cos\theta_5}\right)\sin\theta_5 = -W_2$$

$$F_4\left[\sin\theta_4 - \left(\frac{\cos\theta_4}{\cos\theta_5}\right)\sin\theta_5\right] = -W_2$$

$$F_4 = \frac{-W_2}{\left[\sin\theta_4 - \left(\dfrac{\cos\theta_4}{\cos\theta_5}\right)\sin\theta_5\right]}$$

$$F_4 = \frac{-(85\text{ lb})}{\left[\sin 25^0 - \left(\dfrac{\cos 25^0}{\cos 50^0}\right)\sin 50^0\right]}$$

$$F_4 = +129.282\text{ lb}$$

$$F_4 = \underline{\underline{129.282\text{ lb}}}$$

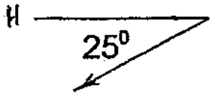

(applied at point C)

Example 3-3: (cont'd.)

A working diagram can now be constructed for the forces that are concurrent at point B. Force F_4 (from previous page) is for a cable, and cables are always loaded in tension, so F_4 must be shown as PULLING on point B.

SECOND WORKING DIAGRAM: (Forces concurrent at point B)

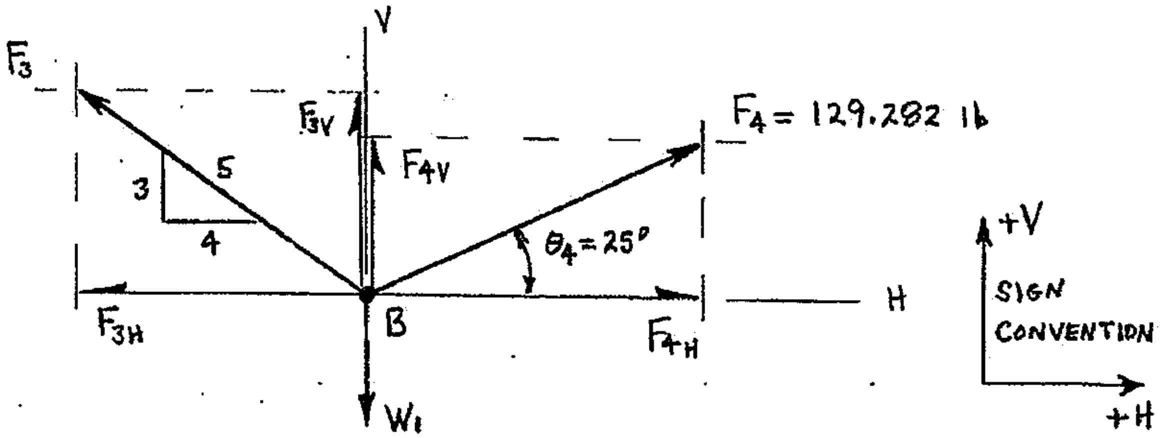

Applying static equilibrium in the horizontal direction to the second working diagram:

$$\Sigma F_H = 0$$

$$0 = \pm W_{1H} \pm F_{3H} \pm F_{4H}$$

$$\underline{\text{Where}}: \quad W_{1H} = 0$$

$$F_{3H} = \left(\frac{4}{5}\right) F_3$$

$$F_{4H} = F_4 \cos\theta_4$$

$$0 = +0 - \left(\frac{4}{5}\right) F_3 + F_4 \cos\theta_4$$

$$F_3 = \frac{+F_4 \cos\theta_4}{\left(\frac{4}{5}\right)}$$

$$F_3 = \frac{+(129.282 \text{ lb}) \cos 25^0}{\left(\frac{4}{5}\right)}$$

$$F_3 = +146.4616 \text{ lb}$$

$$F_3 = \underline{\underline{146.4616 \text{ lb}}}$$

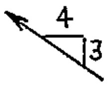

cont'd.

Example 3-3: (cont'd.)

Applying static equilibrium in the vertical direction to the second working diagram:

$$\Sigma F_V = 0$$

$$0 = \pm W_{1V} \pm F_{3V} \pm F_{4V}$$

<u>Where</u>: $W_{1V} = W_1 \quad \downarrow$

$$F_{3V} = \left(\frac{3}{5}\right) F_3 \quad \uparrow$$

$$F_{4V} = F_4 \sin\theta_4 \quad \uparrow$$

$$0 = -W_1 + \left(\frac{3}{5}\right) F_3 + F_4 \sin\theta_4$$

$$W_1 = +\left(\frac{3}{5}\right) F_3 + F_4 \sin\theta_4$$

$$W_1 = +\left(\frac{3}{5}\right)(+146.4616\ \text{lb}) + (129.282\ \text{lb})(\sin 25^0)$$

$$W_1 = +142.514\ \text{lb}$$

$$W_1 = \underline{\underline{142.514\ \text{lb} \quad \downarrow}} \qquad \text{(applied at point B)}$$

The force pulling on the wall at point A is the tensile force in the cable between A and B, which is force F_3. However, you must show that F_3 is <u>PULLING</u> on the wall at point A, as shown below:

$F_3 = \underline{\underline{146.5\ \text{lb}}}$ 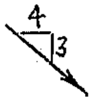

(acting on the wall at point A)

<u>Answer</u>:

W_1 = 142.5 lb $\downarrow$

Force acting on the wall at point A:

F_3 = 146.5 lb

SUMMARY

Static equilibrium of a concurrent-coplanar force system could be defined as a condition in which the summation of all forces acting on a particle at rest is equal to zero ($\Sigma F = 0$). If the sum of all the forces acting on a particle (a point) is zero, then the sum of the forces' components in each of two perpendicular directions would also be equal to zero ($\Sigma F_X = 0$ and $\Sigma F_Y = 0$).

The method of perpendicular components was used to solve for either one, or two, unknown forces that were required to maintain static equilibrium of concurrent-coplanar force systems.

Care must be taken when determining the vector answer for a static equilibrium solution. For static equilibrium, the sign (+ or -) returned with the numeric answer is referenced to the assumed sense shown in the initial working diagram; a positive (+) sign indicates agreement with the assumed sense, while a negative sign (-) indicates disagreement with the assumed sense.

A cable is a structural element that can only be loaded in tension. Cable systems may be NON-CONCURRENT, coplanar force systems. However, most non-concurrent cable systems can be simplified into discreet concurrent-coplanar systems at each point where cables are joined together. The discreet concurrent-coplanar systems are solved, and then information is transferred to the other discreet concurrent-coplanar systems within the larger cable system. The methods shown for working with cable systems also apply to any other structural members that can only be loaded in tension (i.e., ropes, cords, chains, etc.).

FURTHER EXAMPLE PROBLEMS (solutions in GFSA format are on the following pages)

Example 3-4 The force system shown below is in static equilibrium. Determine the magnitude, direction and sense of force F_3.

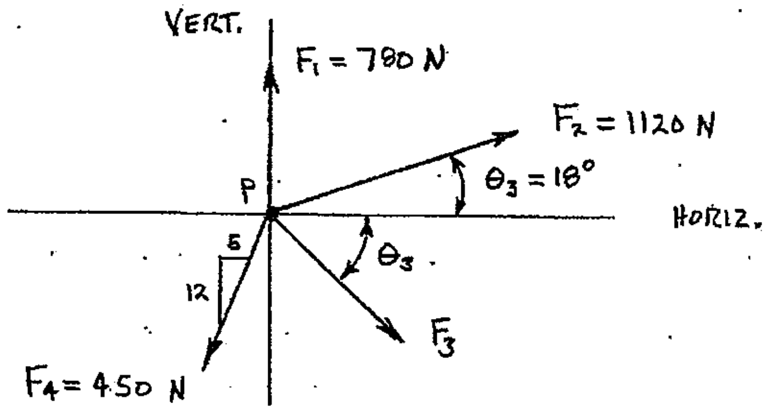

Example 3-5: A concurrent-coplanar force system is shown below. Determine the force F_3 required for the system to remain in static equilibrium.

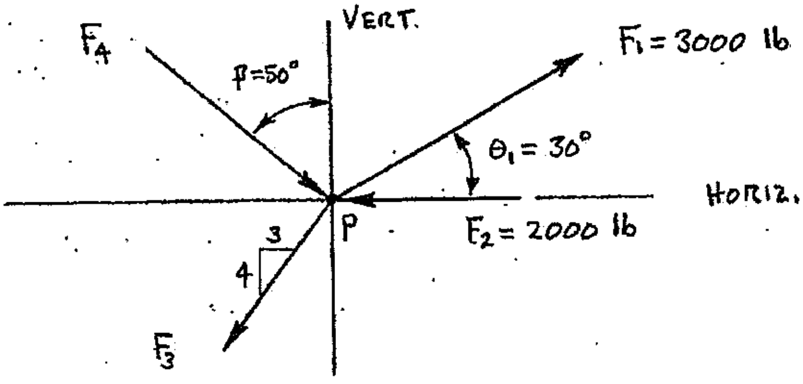

Example 3-6: The gusset plate shown below is subjected to five forces which are concurrent at point P. Determine the forces F_2 and F_4 that are required to maintain static equilibrium.

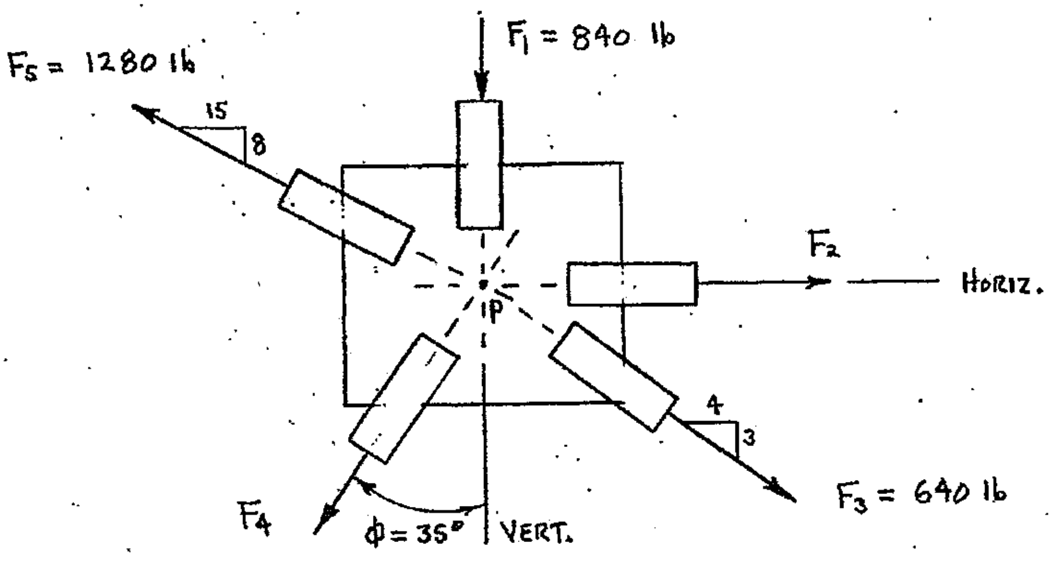

PROBLEM: EXAMPLE 3-4

GIVEN: THE FORCE SYSTEM SHOWN BELOW IS IN STATIC EQUILIBRIUM.

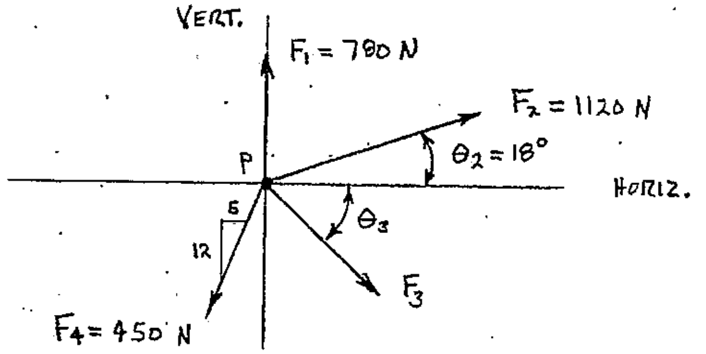

FIND: DETERMINE THE MAGNITUDE, DIRECTION AND SENSE OF FORCE F_3.

SOLUTION:

INITIAL WORKING DIAGRAM:

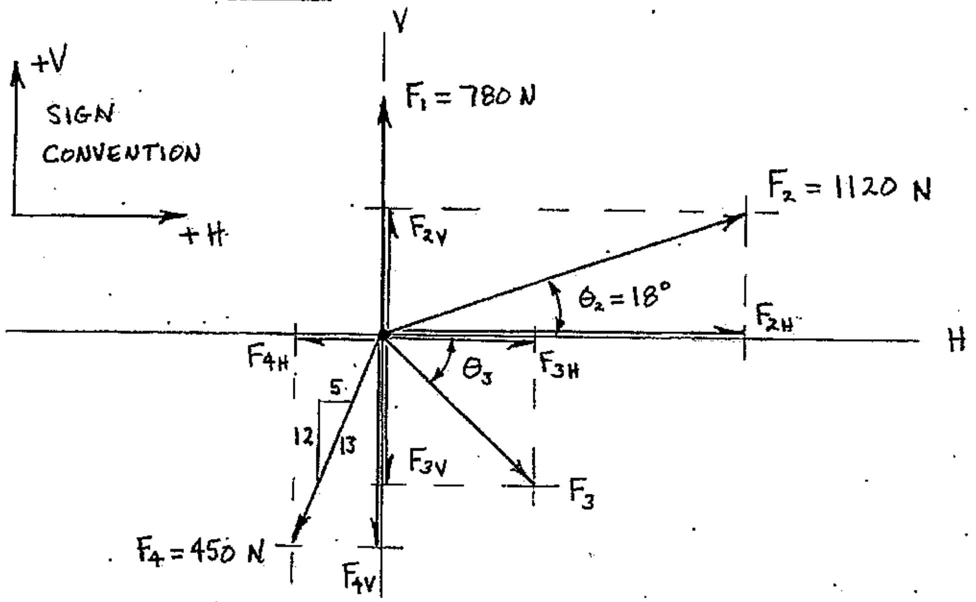

APPLYING STATIC EQUILIBRIUM IN THE H-DIRECTION:

$$\Sigma F_H = 0$$

$$0 = \pm F_{1H} \pm F_{2H} \pm F_{3H} \pm F_{4H}$$

CONT'D.

PROBLEM: EXAMPLE 3-4 (CONT'D.)

WHERE: $F_{1H} = 0$

$F_{2H} = F_2 \cos\theta_2$ →

$F_{3H} = F_3 \cos\theta_3$ →

$F_{4H} = (5/13)\, F_4$ ←

$0 = 0 + F_2 \cos\theta_2 + F_{3H} - (5/13)\, F_4$

$F_{3H} = -F_2 \cos\theta_2 + (5/13)\, F_4$

$F_{3H} = -(1120\ N)(\cos 18°) + (5/13)(450\ N)$

$F_{3H} = -892.106\ N$

$F_{3H} = \underline{\underline{892.106\ N}}$ ←

APPLYING STATIC EQUILIBRIUM TO THE V-DIRECTION:

$\Sigma F_V = 0$

$0 = \pm F_{1V} \pm F_{2V} \pm F_{3V} \pm F_{4V}$

WHERE: $F_{1V} = F_1$ ↑

$F_{2V} = F_2 \sin\theta_2$ ↑

$F_{3V} = F_3 \sin\theta_3$ ↓

$F_{4V} = (12/13)\, F_4$ ↓

$0 = +F_1 + F_2 \sin\theta_2 - F_{3V} - (12/13)\, F_4$

$F_{3V} = +F_1 + F_2 \sin\theta_2 - (12/13)\, F_4$

$F_{3V} = +(780N) + (1120N)(\sin 18°) - (12/13)(450\ N)$

$F_{3V} = +710.714\ N$

$F_{3V} = \underline{\underline{710.714\ N}}$ ↓

CONT'D.

PROBLEM: EXAMPLE 3-4 (CONT'D.)

WORKING DIAGRAM FOR F_3 AND θ_3:

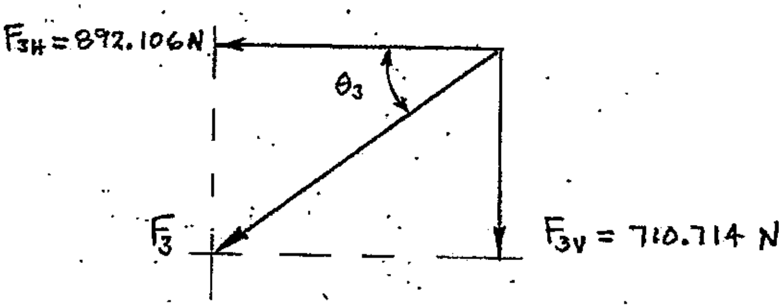

SOLVE FOR F_3'S MAGNITUDE USING PYTHAGOREAN THEOREM:

$$F_3 = \sqrt{F_{3H}^2 + F_{3V}^2}$$

$$F_3 = \sqrt{(892.106\,N)^2 + (710.714\,N)^2}$$

$$F_3 = \underline{\underline{1140.60\ N}} \quad \text{(MAGNITUDE ONLY)}$$

SOLVE FOR θ_3 USING INVERSE TANGENT FUNCTION:

$$\theta_3 = \tan^{-1}\left(\frac{F_{3V}}{F_{3H}}\right)$$

$$\theta_3 = \tan^{-1}\left(\frac{710.714\,N}{892.106\,N}\right)$$

$$\theta_3 = \underline{\underline{38.5433^\circ}}$$

ANSWER:

$F_3 = 1141\ N$

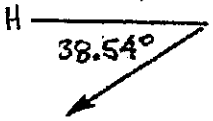

PROBLEM: EXAMPLE 3-5

GIVEN: THE CONCURRENT-COPLANAR FORCE SYSTEM SHOWN BELOW.

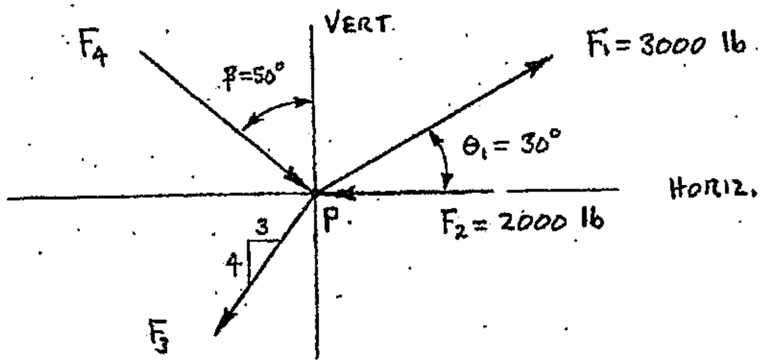

FIND: DETERMINE FORCE F_3 REQUIRED FOR THE SYSTEM TO REMAIN IN STATIC EQUILIBRIUM.

SOLUTION:

INITIAL WORKING DIAGRAM:

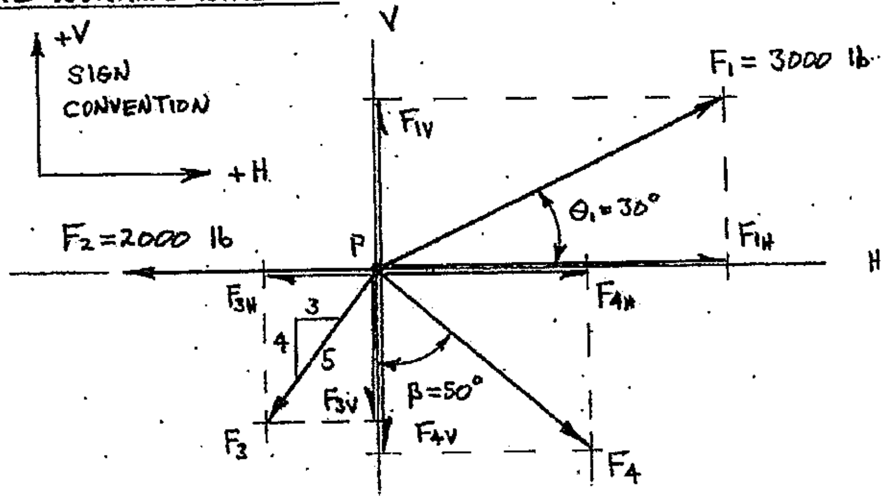

APPLYING STATIC EQUILIBRIUM IN THE H-DIRECTION:

$\Sigma F_H = 0$

$0 = \pm F_{1H} \pm F_{2H} \pm F_{3H} \pm F_{4H}$

WHERE: $F_{1H} = F_1 \cos\theta_1$ →

$F_{2H} = F_2$ ←

CONT'D.

PROBLEM: EXAMPLE 3-5 (CONT'D.)

$$F_{3H} = (3/5)\,F_3 \quad \leftarrow$$

$$F_{4H} = F_4 \sin\beta \quad \rightarrow$$

$$0 = +F_1\cos\theta_1 - F_2 - (3/5)\,F_3 + F_4 \sin\beta \qquad \text{(EQ. 1)}$$

APPLYING STATIC EQUILIBRIUM IN THE V-DIRECTION:

$$\Sigma F_V = 0$$

$$0 = \pm F_{1V} \pm F_{2V} \pm F_{3V} \pm F_{4V}$$

WHERE: $F_{1V} = F_1 \sin\theta_1 \quad \uparrow$

$F_{2V} = 0$

$F_{3V} = (4/5)\,F_3 \quad \downarrow$

$F_{4V} = F_4 \cos\beta \quad \downarrow$

$$0 = +F_1\sin\theta_1 + 0 - (4/5)\,F_3 - F_4 \cos\beta \qquad \text{(EQ. 2)}$$

EQ. 1 + EQ. 2 ⟹ 2 EQUATIONS W/ SAME 2 UNKNOWNS ($F_3 + F_4$)

CROSS-MULTIPLY EQUATIONS BY COEFFICIENTS OF F_4:

$$\left[0 = +F_1\cos\theta_1 - F_2 - (3/5)\,F_3 + F_4\sin\beta\right](\cos\beta) \qquad \text{EQ. 1}$$

$$\left[0 = +F_1\sin\theta_1 + 0 - (4/5)\,F_3 - F_4\cos\beta\right](\sin\beta) \qquad \text{EQ. 2}$$

$$0 = +F_1\cos\theta_1\cos\beta - F_2\cos\beta - (3/5)\,F_3\cos\beta + F_4\sin\beta\cos\beta \qquad \text{EQ. 1B}$$

$$0 = +F_1\sin\theta_1\sin\beta + 0 - (4/5)\,F_3\sin\beta - F_4\cos\beta\sin\beta \qquad \text{EQ. 2B}$$

CONT'D.

PROBLEM: EXAMPLE 3-5 (CONT'D.)

ADD EQS. 1B + 2B, SOLVE FOR F_3:

$$0 = +F_1 \cos\theta_1 \cos\beta - F_2 \cos\beta - (3/5) F_3 \cos\beta + F_4 \sin\beta \cos\beta \qquad \text{EQ. 1B}$$

$$0 = +F_1 \sin\theta_1 \sin\beta + 0 - (4/5) F_3 \sin\beta - F_4 \cos\beta \sin\beta \qquad \text{EQ. 2B}$$

$$0 = +F_1 (\cos\theta_1 \cos\beta + \sin\theta_1 \sin\beta) - F_2 \cos\beta - F_3\left[(3/5)\cos\beta + (4/5)\sin\beta)\right]$$

$$F_3 = \frac{+F_1 (\cos\theta_1 \cos\beta + \sin\theta_1 \sin\beta) - F_2 \cos\beta}{+(3/5)\cos\beta + (4/5)\sin\beta}$$

$$F_3 = \frac{+(3000\text{ lb})\left[(\cos 30^\circ)(\cos 50^\circ) + (\sin 30^\circ)(\sin 50^\circ)\right] - (2000\text{ lb})(\cos 50^\circ)}{+(3/5)(\cos 50^\circ) + (4/5)(\sin 50^\circ)}$$

$$F_3 = +1535.79\text{ lb}$$

$F_3 = 1535.79$ lb

ANSWER:

$F_3 = 1536$ lb 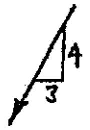

PROBLEM: EXAMPLE 3-6

GIVEN: THE GUSSET PLATE SHOWN BELOW IS SUBJECTED TO FIVE FORCES WHICH ARE CONCURRENT AT POINT P.

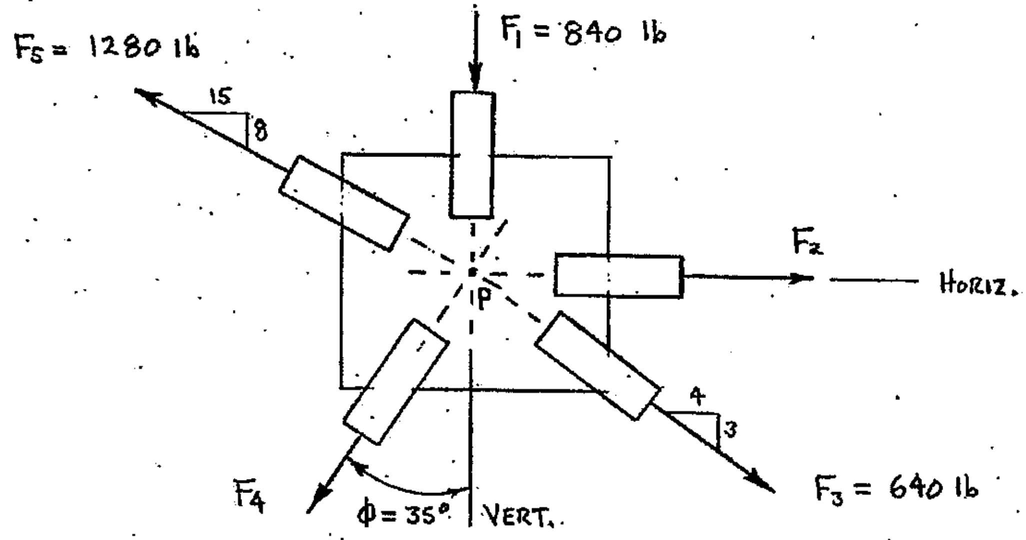

FIND: DETERMINE FORCES F_2 AND F_4 REQUIRED TO MAINTAIN STATIC EQUILIBRIUM.

SOLUTION:

INITIAL WORKING DIAGRAM:

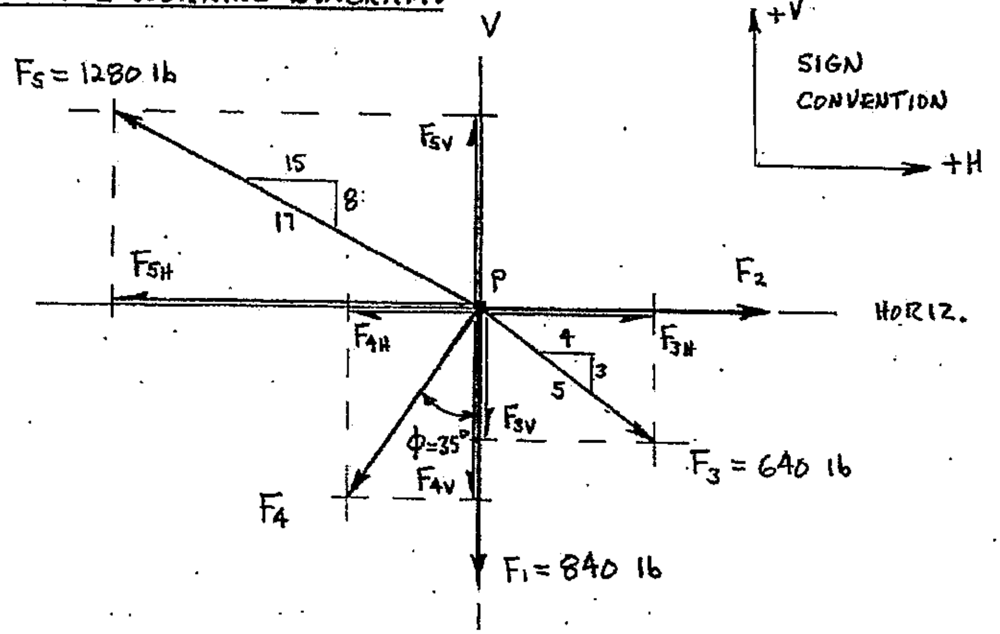

CONT'D.

PROBLEM: EXAMPLE 3-6 (CONT'D.)

APPLYING STATIC EQUILIBRIUM IN THE H-DIRECTION:

$$\Sigma F_H = 0$$

$$0 = \pm F_{1H} \pm F_{2H} \pm F_{3H} \pm F_{4H} \pm F_{5H}$$

WHERE:

$F_{1H} = 0$

$F_{2H} = F_2$ →

$F_{3H} = (4/5) F_3$ →

$F_{4H} = F_4 \sin\phi$ ←

$F_{5H} = (15/17) F_5$ ←

$$0 = 0 + F_2 + (4/5) F_3 - F_4 \sin\phi - (15/17) F_5 \qquad \text{(Eq. 1)}$$

APPLYING STATIC EQUILIBRIUM IN THE V-DIRECTION:

$$\Sigma F_V = 0$$

$$0 = \pm F_{1V} \pm F_{2V} \pm F_{3V} \pm F_{4V} \pm F_{5V}$$

WHERE:

$F_{1V} = F_1$ ↓

$F_{2V} = 0$

$F_{3V} = (3/5) F_3$ ↓

$F_{4V} = F_4 \cos\beta$ ↓

$F_{5V} = (8/17) F_5$ ↑

$$0 = -F_1 + 0 - (3/5) F_3 - F_4 \cos\beta + (8/17) F_5$$

$$F_4 = \frac{-F_1 - (3/5) F_3 + (8/17) F_5}{\cos\beta}$$

$$F_4 = \frac{-(840\ \text{lb}) - (3/5)(640\ \text{lb}) + (8/17)(1280\ \text{lb})}{\cos 35^\circ}$$

$$F_4 = -758.891\ \text{lb}$$

$$F_4 = 758.891\ \text{lb} \ \nearrow 55^\circ$$

CONT'D.

PROBLEM: EXAMPLE 3-6 (CONT'D.)

SUBSTITUTE $F_4 = -758.891$ lb INTO EQ. 1:

$$0 = 0 + F_2 + (4/5)F_3 - F_4 \sin\phi - (15/17)F_5 \qquad \text{(EQ. 1)}$$

$$F_2 = -(4/5)F_3 + F_4 \sin\phi + (15/17)F_5$$

$$F_2 = -(4/5)(640\text{ lb}) + (-758.891\text{ lb})(\sin 35°) + (15/17)(1280\text{ lb})$$

$$F_2 = +182.130\text{ lb}$$

$$F_2 = 182.130\text{ lb} \longrightarrow$$

ANSWER:

$F_2 = 182.1$ lb $\longrightarrow$

$F_4 = 758.9$ lb at 55° from H

PRACTICE PROBLEMS

3.1 Two forces are applied at point P as shown below. Determine the force F_3 (not shown) that must be applied at point P so that the force system will be in static equilibrium.

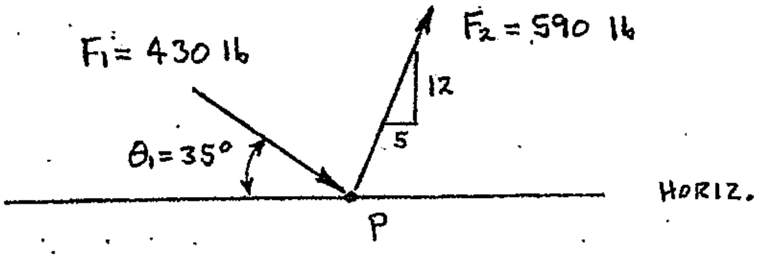

3.2 The force system shown below is in static equilibrium. Determine the magnitude, direction and sense of force F_2.

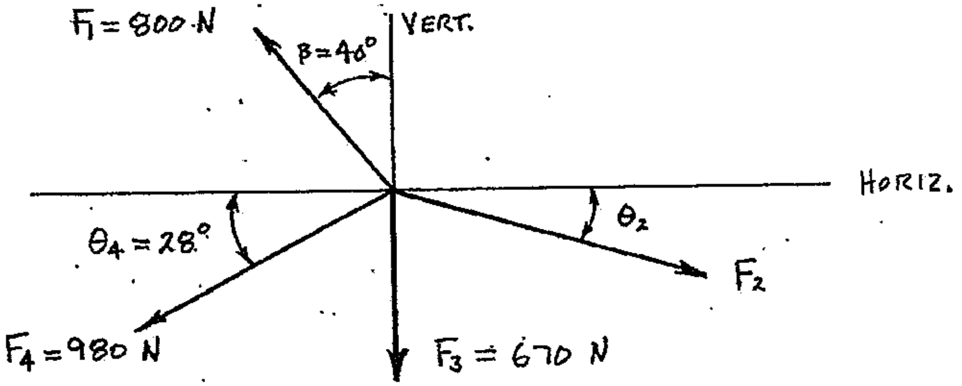

3.3 Determine the force F_4 required to maintain static equilibrium of the force system shown below.

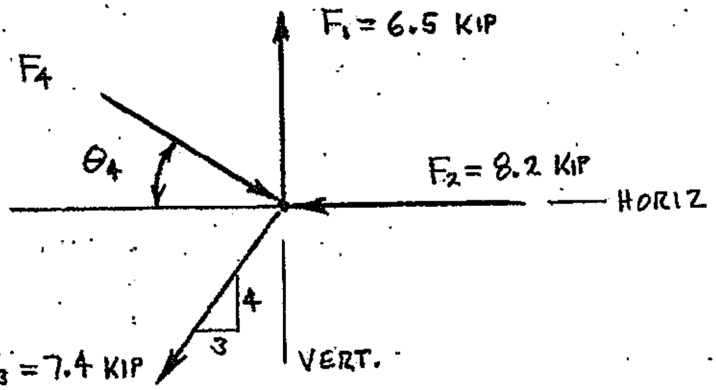

Practice Problems

3.4 All forces shown below are applied at point A. Determine the force F_5 (not shown) which must be applied at point A to establish and maintain static equilibrium.

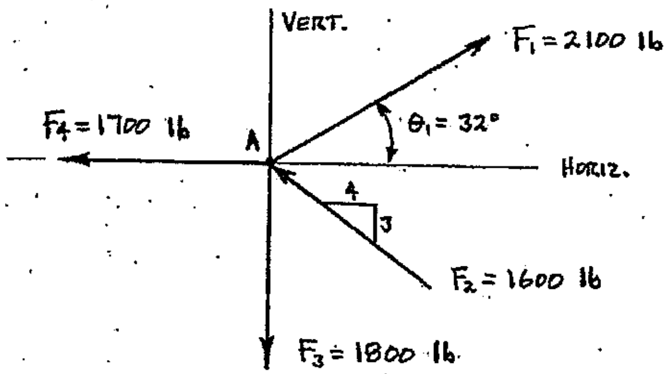

3.5 The concurrent-coplanar force system shown below is in static equilibrium. Determine forces F_2 and F_3.

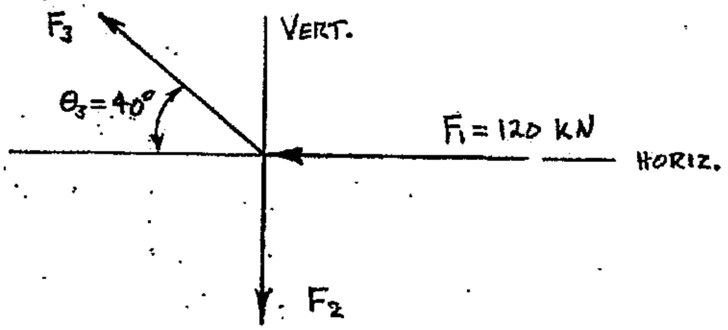

3.6 The force system shown below is in static equilibrium. Determine forces F_2 and F_4.

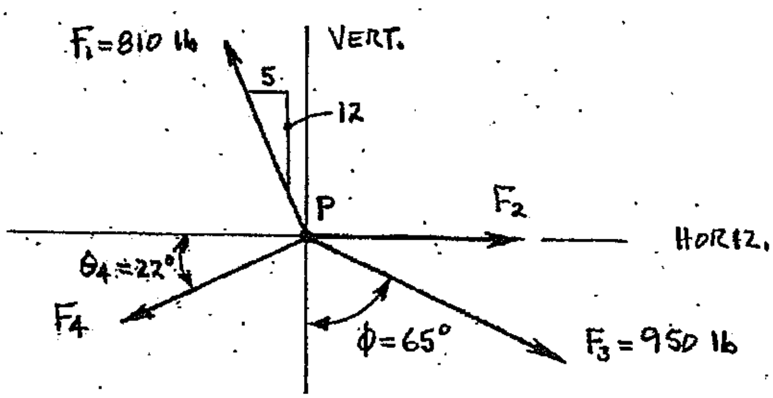

PRACTICE PROBLEMS

3.7 Four members of a truss are pinned together at joint B, and the force in each truss member is concurrent at B. The truss joint is in static equilibrium. Determine forces F_1 and F_2.

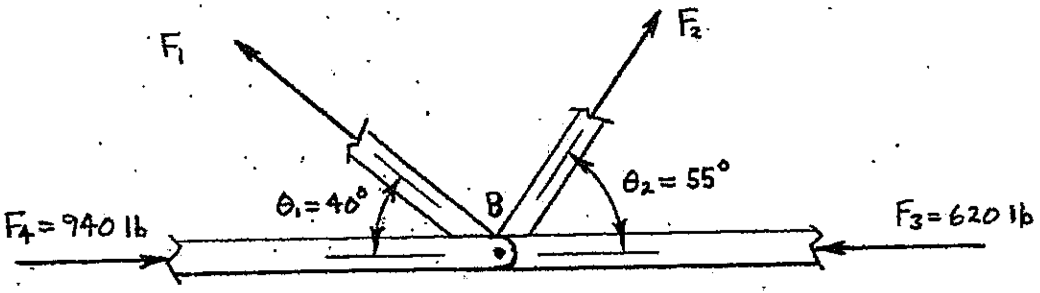

3.8 Five forces are concurrent at point O on the gusset plate shown below, and the gusset plate is in static equilibrium. Solve for ONLY force F_1.

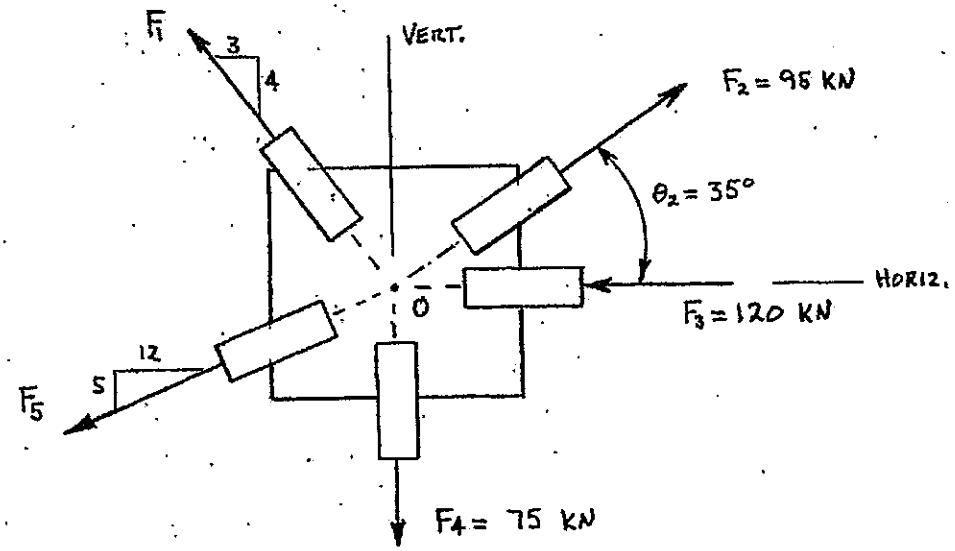

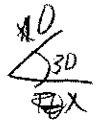

$N \cos 30 = \frac{x}{10}$ 10

3.9 A weight W = 200 lb is suspended from a cable system as shown below. There are four individual cables (numbered 1-4). Determine the force F, horizontal and to the right, that must be applied at point C so that the system remains in static equilibrium in the position shown.

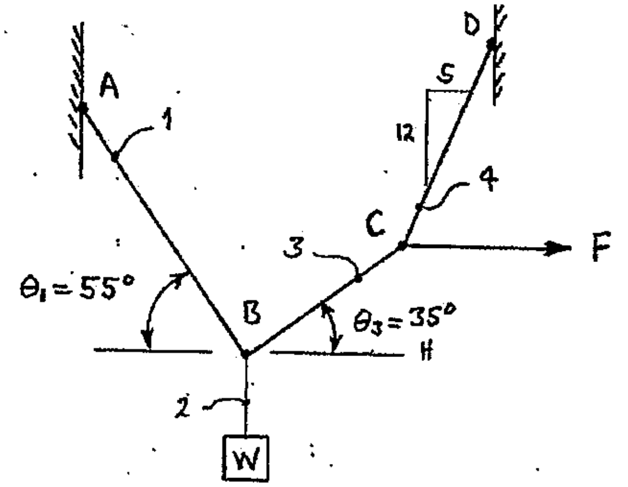

3.10 A cable system supports a 60 lb weight as shown below. The cable from B to D is horizontal, and the cables have been numbered 1-6. Determine the angle θ_1 that is required for the system to remain in/at static equilibrium in the position shown.

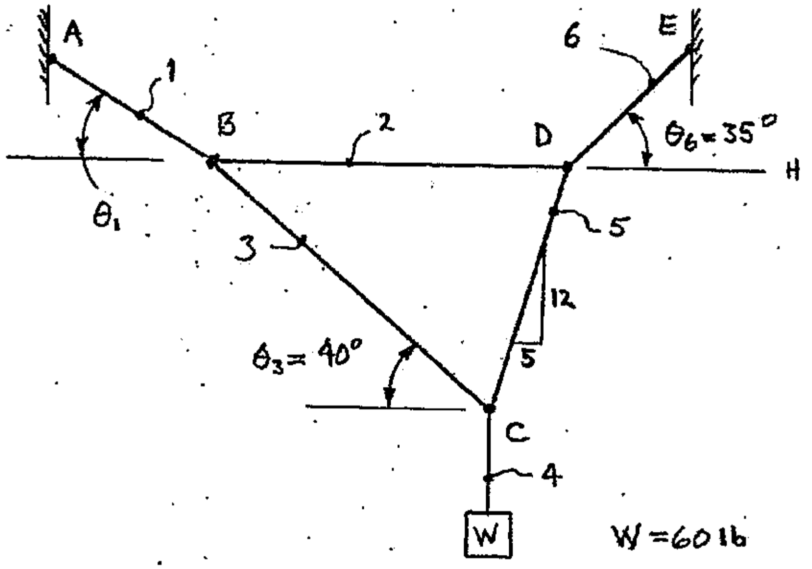

PRACTICE PROBLEMS

3.11 The force system shown below is in static equilibrium. Determine the magnitude, direction and sense of force F_2.

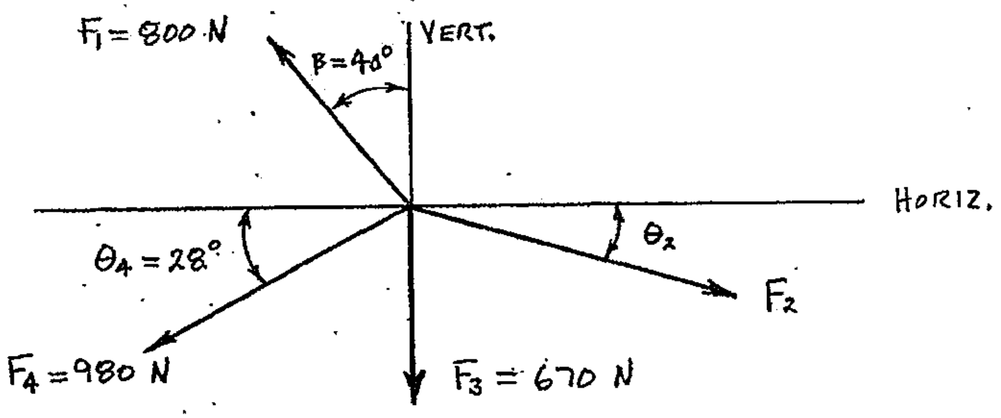

3.12 Determine the horizontal force F_1 and the angle θ_2 required to maintain static equilibrium of the system shown below.

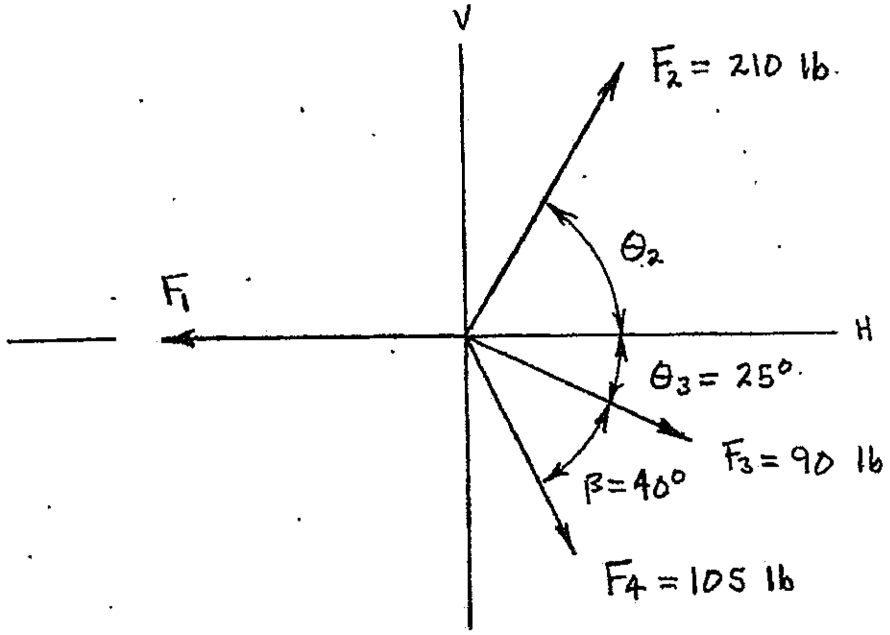

3.13 The cable system shown below is in static equilibrium. Determine the tension in cables AB and BC caused by the applied force F_1.

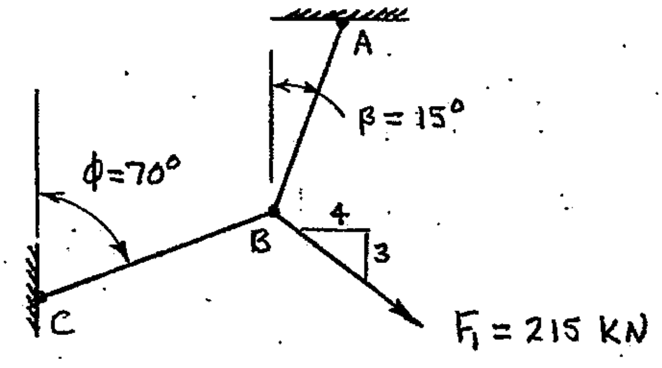

CHAPTER 4: MOMENTS, SUMMATION OF MOMENTS, AND VARIGNON'S THEOREM

MOMENTS

In the most general mathematical terms, a ***moment*** is the product of a quantity and a perpendicular distance ($d_\perp$) from a specified reference to the quantity. The perpendicular distance is sometimes called the moment arm, or lever arm. The reference is typically a point or an axis.

There are several different types of moments common to engineering mechanics, such as force moments, area moments of inertia, and mass moments of inertia. These moments are all the products of some quantity (force, area or mass) and a perpendicular distance from a reference to that quantity. The moment produced by a force is called a force moment (or, for this class, simply a **moment**; specific names will be used for all other types of moments). The symbol used for a moment is normally a capital M.

A moment is a measure of the tendency to produce rotational motion about a point or an axis. Moments can be present whether there is actual rotation (dynamics), or only the tendency to rotate (statics). Moments are vector quantities, so a moment will have magnitude, direction, sense and a point of application as defined below.

Characteristics of a moment (force moment):

Magnitude ⇒ Magnitude describes the *size* of the moment. The magnitude of a moment is the product of the force's magnitude and the perpendicular distance between a specific point (or axis) and the force's line of action.

Direction ⇒ Direction describes the orientation of a moment's line of action. The line of action of a moment is perpendicular to the plane formed by the force's line of action and its moment arm about a specific reference. Direction appears as a point in 2-dimensional problems.

Sense ⇒ Sense describes the type of rotational tendency produced by the force with respect to the moment's direction. Sense is typically either described as clockwise (↻) or counterclockwise (↺), normally with just the vector symbols for rotation.

Point of Application ⇒ The point of application is the point (or axis) about which the moment is being evaluated. The point of application is typically shown as a subscript next to the moment symbol, such as M_P, where M_P is read as "the moment with respect to point P" or "the moment about point P".

Figure 4-1 shows a force (F_1) that has a line of action 18^0 from the horizontal. Point C is on the line of action (LOA) of force F_1. Points A and B are on a line that is parallel to the line of action of F_1, but is separated by a distance of 3 inches.

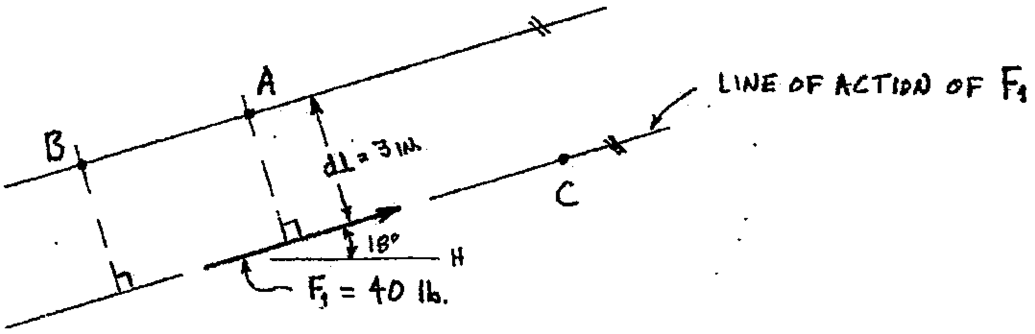

FIGURE 4-1 Force F_1; points A, B and C

The moment of force F_1 about point A (or with respect to point A) can be calculated as follows:

Moment about point A = (magnitude of F_1)($d_\perp$ between point A and F_1's LOA)

$M_A = (F_1)(d_\perp)$

$M_A = (40\,\text{lb})(3\,\text{in})$

$M_A = \underline{\underline{120\ \text{lb-in}\ \circlearrowleft}}$

The counterclockwise (↺) sense of M_A is shown in Figure 4-2. Imagine that force F_1 is connected to point A by a rod that is perpendicular to F_1's line of action (the rod represents F_1's moment arm). The rod has a solid (glued, welded, etc.) connection to F_1, but is attached to a pivot at point A. This arrangement would not allow F_1 to move linearly along its line of action according to its sense (upward and to the right); instead, F_1 would appear to rotate counterclockwise about point A (or with respect to point A).

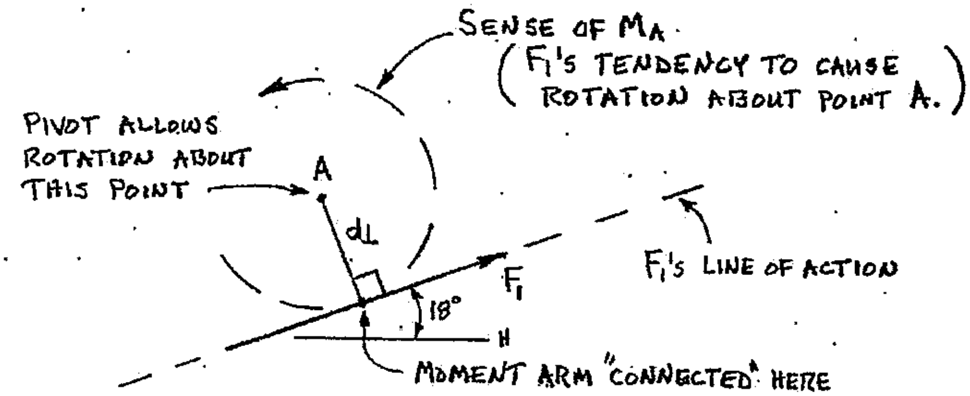

Figure 4-2 Sense of moment about point A caused by F_1

It has been shown that F_1 (from Figure 4-1) produces a 120 lb-in counterclockwise moment with respect to point A. Force F_1 would also produce an identical moment about point B (M_B = 120 lb-in $\circlearrowleft$), since the perpendicular distance from the line of action of F_1 is the same for either point A or point B. Since point C lies ***on*** the line of action of force F_1, the moment arm ($d\perp$) of F_1 with respect to point C is zero (0). The moment of F_1 about point C would then also be zero: $M_C = (F_1)(0) = 0$.

SUMMATION OF MOMENTS

Sometimes it is necessary to find the ***total*** moment that a system of forces will produce with respect to a specified reference (point or axis). This can be accomplished by summing the moment produced by each individual force with respect to the specified reference. The principle of summation of moments is stated as follows, where M_P specifies the total moment about some point P:

$$M_P = \sum M_{iP} \qquad \text{(where i = each individual moment, with respect to point P)}$$

$$M_P = \pm[M_1 \text{ due to force } F_1] \pm [M_2 \text{ due to force } F_2] \ldots\ldots \pm [M_n \text{ due to force } F_n]$$

$$M_P = \pm[(F_1)(d_\perp)] \pm [(F_2)(d_\perp)] \ldots\ldots \pm [(F_n)(d_\perp)]$$

The term for each individual moment is shown in "square" brackets in the last line of the moment summation equation shown above; the "square" brackets are used to identify each of the individual moments. It is important to note that the symbol $d_\perp$ in each set of "square" brackets represents the moment arm for ONLY the force shown in that set of brackets.

Since moments are vector quantities, a sign convention must be established so that the sense of each moment can be taken into account during summation. A typical sign convention for summation of moments is shown in Figure 4-3. In this case, the vector symbol is a counterclockwise "rotational" (circular) arrow. The plus (+) sign shown inside the vector symbol establishes a positive convention for moments with counterclockwise sense. For a "counterclockwise positive" sign convention (as seen in Figure 4-3), counterclockwise moments would be positive and clockwise moments would be negative. Once established, the sign convention must be used consistently throughout a moment summation, as shown in Example 4-1.

SIGN CONVENTION:

FIGURE 4-3 Typical sign convention for moment summation establishing counterclockwise moments as positive

Example 4-1: Calculate the total moment about point B due to the force system shown below.

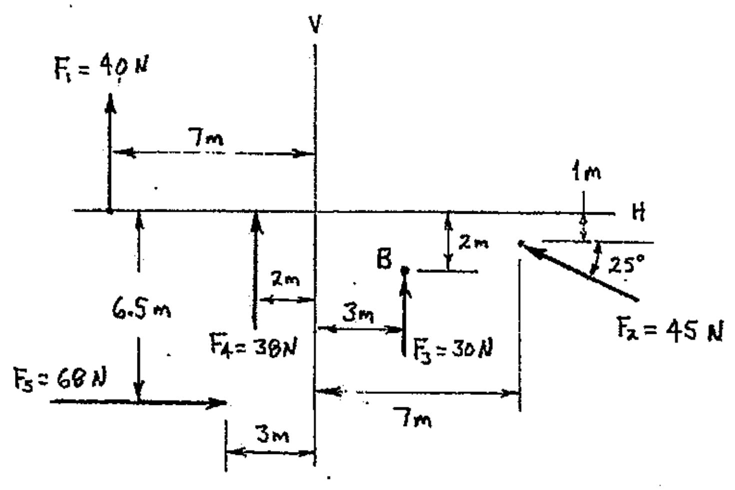

A working diagram must be constructed so that the moment arms for each force can be identified. The moment arm is the perpendicular distance between the line of action of each force and the specified reference (point B). Note that the lines of action for each force have been extended as an aid to identify the moment arm for each force. The moment arms for most of the forces can be taken directly from the diagram, however the moment arm for force F_2 must be calculated. A "rotational" sign convention must be included as part of the working diagram.

Working diagram:

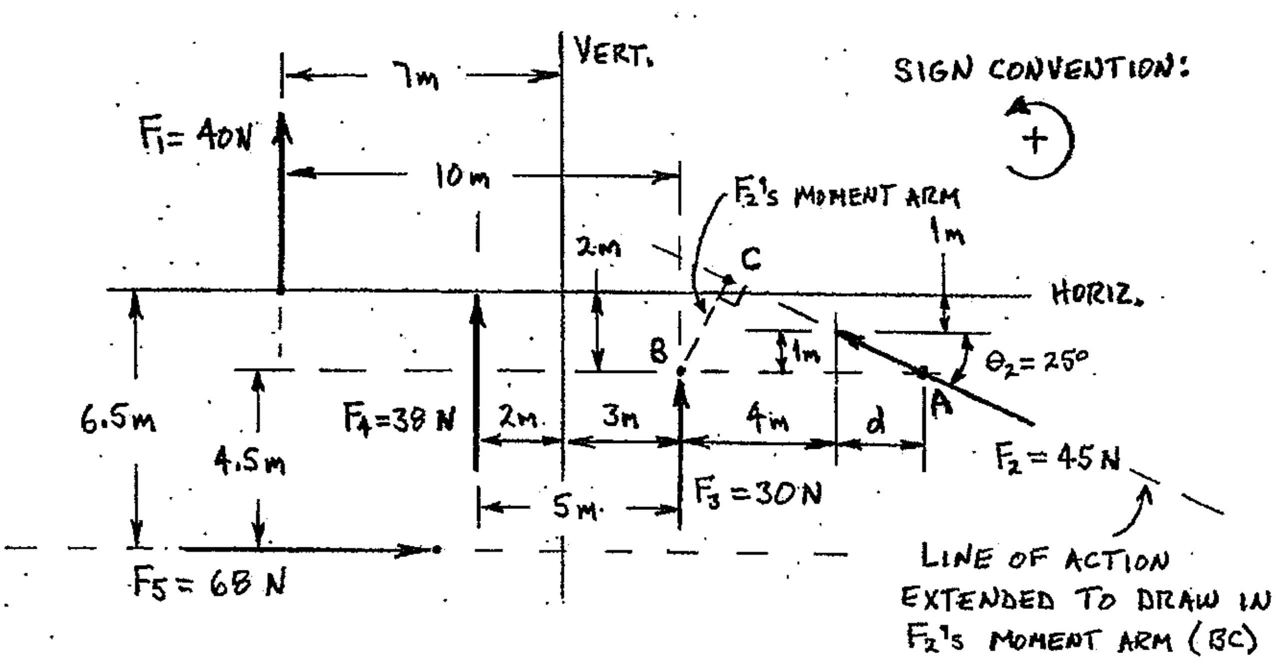

Example 4-1: (cont'd)

The moment arm (length BC) of force F_2 must be calculated; this requires that two lengths be found. Length d is calculated first, and then the moment arm BC can be found.

Calculate length d:

$$\tan\theta_2 = \frac{opp}{adj} = \frac{1\,m}{d}$$

$$d = \frac{1\,m}{\tan\theta_2}$$

$$d = \frac{1\,m}{\tan 25^0}$$

$$d = \underline{\underline{2.14451\,m}}$$

Now calculate the moment arm ($d_\perp$) of force F_2:

$$\sin\theta_2 = \frac{opp}{hyp} = \frac{BC}{4\,m + d}$$

$$BC = \sin\theta_2 (4\,m + d)$$

$$BC = \sin 25^0 (4m + 2.14451\,m)$$

$$BC = \underline{\underline{2.59678\,m}}$$

A summation of moments will now be done to determine the total moment that the system produces with respect to point B. The first two algebraic lines of a summation equation (in this case, summation of moments) are considered to be the heading; these two lines represent a "coupled pair", which means <u>BOTH</u> lines must be completely shown. The first line describes the type of problem (in this case, summation of moments). The second line is the expanded heading, and includes terms for each individual moment produced by forces shown in the initial working diagram.

$$M_B = \sum M_{iB}$$

$$M_B = \pm[(F_1)(d_\perp)] \pm [(F_2)(d_\perp)] \pm [(F_3)(\overset{0}{\cancel{d_\perp}})] \pm [(F_4)(d_\perp)] \pm [(F_5)(d_\perp)]$$

The moment arm for force F_3 is equal to zero (0), since point B lies <u>ON</u> F_3's line of action. So, the moment arm symbol ($d_\perp$) for force F_3 was "shown as zero" in the expanded heading (above).

Example 4-1: (cont'd.)

The next line in the equation is the initial algebraic statement. The rotational sense for each individual moment is shown in Figure 4-4. Mathematical signs (+ or -) can be specified for each term by referencing the rotational sense determined for each individual moment to the sign convention established in the initial working diagram.

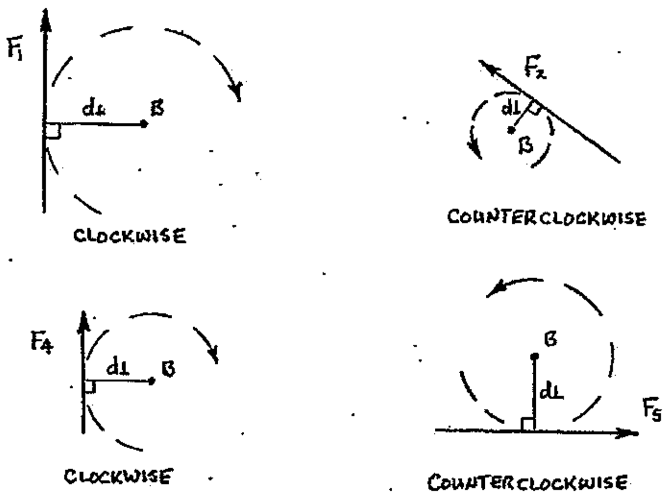

FIGURE 4-4 Rotational tendency caused by individual forces

The initial algebraic statement is developed using the sign (+ or -) established for each term (each individual moment), and the moment arm for each force.

$$M_B = -\left[(F_1)(10\text{ m})\right] + \left[(F_2)(2.59678\text{ m})\right] + 0 - \left[(F_4)(5\text{ m})\right] + \left[(F_5)(4.5\text{ m})\right]$$

Algebraic development is done next (if required) to isolate the unknown on the left-hand side of the equals sign. For this example, no algebraic development is necessary. Algebraic development is followed by the initial numeric statement, where numeric values (with appropriate units) are substituted for all known algebraic terms. The initial numeric statement may be followed by numeric development (if necessary).

$$M_B = -\left[(40\text{ N})(10\text{ m})\right] + \left[(45\text{ N})(2.59678\text{ m})\right] - \left[(38\text{ N})(5\text{ m})\right] + \left[(68\text{ N})(4.5\text{ m})\right]$$
$$M_B = -400\text{ N-m} + 116.855\text{ N-m} - 190\text{ N-m} + 306\text{ N-m}$$

The last two lines in the equation again represent a "coupled pair"; BOTH lines must be shown and BOTH must be complete. The first of these two lines represents the "numeric answer", and is a numeric value, with appropriate units, PRECEDED BY either a + or – sign as developed in the numeric solution. The sign (+ or -) is REQUIRED, since the sign is used to develop the "vector answer" shown on the next (last) line. The vector answer is a numeric value with appropriate units, followed by a "rotational" arrow (vector symbol) that shows the rotational sense. The sign (+ or -) from the numeric answer is compared to the working diagram's sign convention to determine the correct

Example 4-1: (cont'd.)

sense for the vector answer. Since counterclockwise rotation was established as positive (+) in the sign convention, the minus (-) sign in the numeric answer is interpreted as clockwise (↻), and a clockwise rotational symbol is shown in the vector answer.

$$M_B = -167.145 \text{ N-m}$$
$$M_B = \underline{\underline{167.145 \text{ N-m} \; \circlearrowright}}$$

The entire equation for summation of moments with respect to point B is shown below:

$$M_B = \sum M_{iB}$$
$$M_B = \pm[(F_1)(d_\perp)] \pm [(F_2)(d_\perp)] \pm [(F_3)(\cancelto{0}{d_\perp})] \pm [(F_4)(d_\perp)] \pm [(F_5)(d_\perp)]$$
$$M_B = -[(F_1)(d_\perp)] + [(F_2)(d_\perp)] + 0 - [(F_4)(d_\perp)] + [(F_5)(d_\perp)]$$
$$M_B = -[(40 \text{ N})(10 \text{ m})] + [(45 \text{ N})(2.59678 \text{ m})] - [(38 \text{ N})(5 \text{ m})] + [(68 \text{ N})(4.5 \text{ m})]$$
$$M_B = -400 \text{ N-m} + 116.855 \text{ N-m} - 190 \text{ N-m} + 306 \text{ N-m}$$
$$M_B = -167.145 \text{ N-m}$$
$$M_B = \underline{\underline{167.145 \text{ N-m} \; \circlearrowright}}$$

The final answer for the moment about point B must include magnitude, sense of rotation, and point of application, as shown below. The magnitude ***must*** include proper units. For two-dimensional problems, the direction will be either into or out of the page and does not need to be shown. The sense ***must*** be shown using a "rotational arrow". Point of application is the reference about which moments are taken (point B for this problem), and is shown as the subscript next to the moment symbol.

Answer:
$M_B = 167.1$ N-m ↻

VARIGNON'S THEOREM

Varignon's Theorem can be stated as follows:

> ***The moment a force produces about a point (or axis) is equal to the sum of the moments produced by the force's components about the same point (or axis).***

Figure 4-4 is a visual representation of Varignon's Theorem as compared to the definition of a moment. The moment produced by force F with respect to point P could be calculated from the definition of a moment (shown on the left), or from Varignon's Theorem (shown on the right); either method would return exactly the same moment about point P.

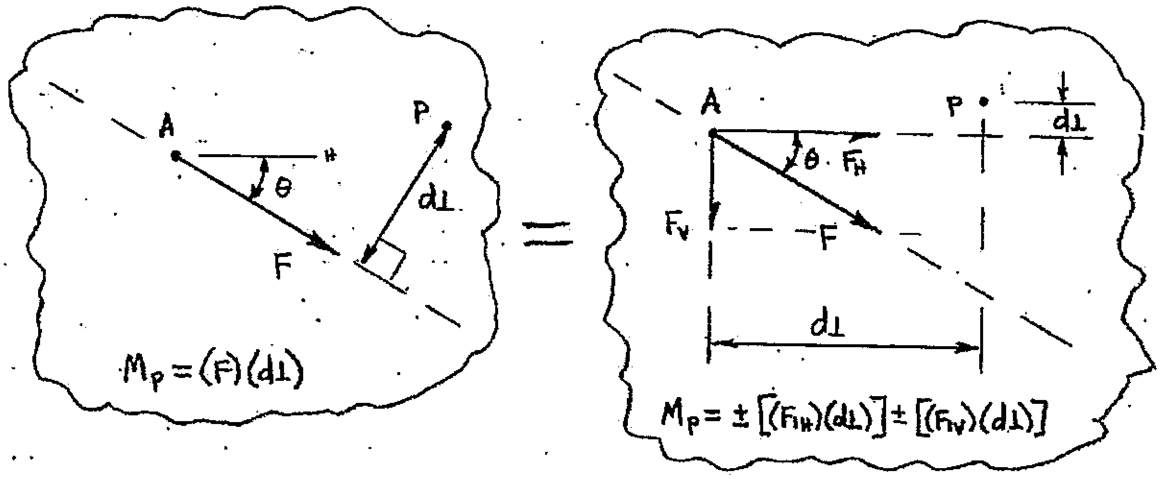

FIGURE 4-4 Definition of a moment vs. Varignon's Theorem

Varignon's Theorem is useful when the moment arm of a force is not clearly shown and must be calculated. Example 4-1 (page 4-4) illustrates that some moment arms are easier to develop than others. For example, the moment arms of forces F_1, F_4 and F_5 were established directly from dimensions given on the working diagram (page 4-4). And the moment arm of force F_3 was zero, since the line of action of F_3 passed through point B. However, the moment arm of force F_2 had to be calculated, and required two separate trigonometry calculations (shown on page 4-5) to yield the perpendicular distance ($d_{\perp} = 2.59678$ m) between the line of action of F_2 and point B.

Varignon's Theorem could also have been used in Example 4-1 to calculate force F_2's moment with respect to point B. Figure 4-5 (following page), and the calculations that follow are used to illustrate that Varignon's Theorem and the definition of a moment will both return exactly the same result for F_2's moment about point B. Please note that ONLY force F_2 is shown in Figure 4-5, and the resulting calculations are for ONLY F_2's moment with respect to point B. Also note that the moment arms of F_2's perpendicular components were taken directly from dimensions shown in the given diagram that appears on page 4-4.

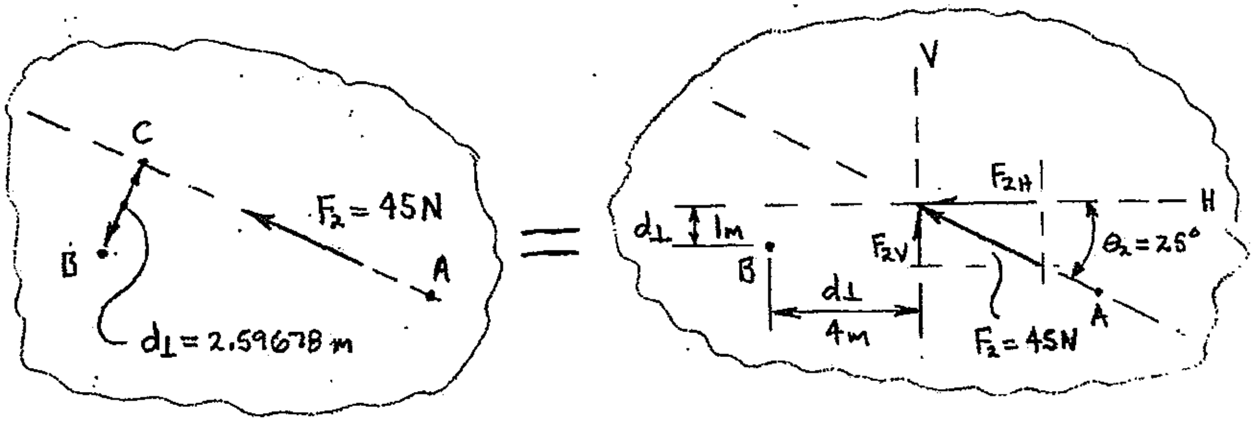

Figure 4-5 Comparing F_2's moment with respect to point B; left side illustrates the definition of a moment, right side is Varignon's Theorem

Calculations for F_2's moment with respect to point B are shown below:

Definition of a moment:

$$M_B = \pm[(F_2)(d_\perp)]$$
$$M_B = +[(45\ N)(2.59678\ m)]$$
$$M_B = +116.855\ \text{N-m}$$
$$M_B = \underline{\underline{116.855\ \text{N-m}\ \circlearrowleft}}$$

Varignon's Theorem:

$$M_B = \pm[(F_{2H})(d_\perp)] \pm [(F_{2V})(d_\perp)]$$

Where: $F_{2H} = F_2 \cos\theta_2$ @ $d_\perp = 1\text{m}$ ↺

$F_{2V} = F_2 \sin\theta_2$ @ $d_\perp = 4\text{ m}$ ↺

$$M_B = +[(F_2 \cos\theta_2)(1\text{m})] + [(F_2 \sin\theta_2)(4\text{ m})]$$
$$M_B = +[(45\text{ N})(\cos 25^0)(1\text{m})] + [(45\text{ N})(\sin 25^0)(4\text{ m})]$$
$$M_B = +40.7839\ \text{N-m} + 76.0713\ \text{N-m}$$
$$M_B = +116.855\ \text{N-m}$$
$$M_B = \underline{\underline{116.855\ \text{N-m}\ \circlearrowleft}}$$

Example 4-2 demonstrates that Varignon's Theorem can be applied at any point along a force's line of action. The moment with respect to point O is first developed using the definition of a moment, $M_O = (F_1)(d_\perp)$, and then by using the components of the force and their respective moment arms (Varignon's Theorem). The force is also moved to several points along its line of action to show that Varignon's Theorem holds true even when using transmissibility to reposition a force along its line of action.

Example 4-2: Calculate the moment of force F_1 (shown below) about point O based on the following conditions:

1. Develop the moment arm ($d\perp$) of F_1 about point O.
2. Use the components of F_1, with F_1 applied at point A.
3. Use the components of F_1, with F_1 applied at point B.
4. Use the components of F_1, with F_1 applied at point C.

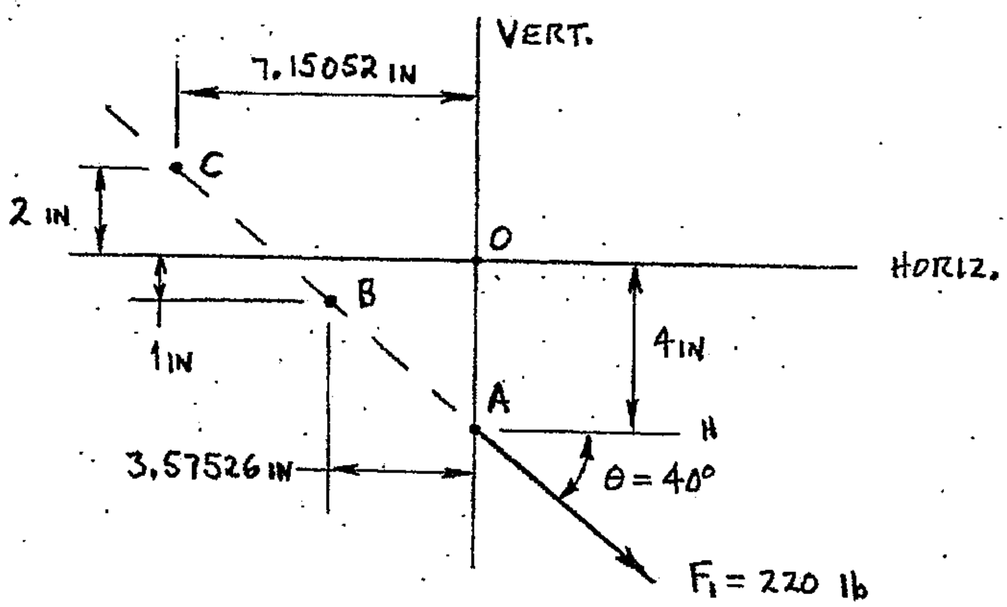

Example 4-2: Part 1 (calculate M_O using the moment arm of F_1)

Working diagram for Part 1:

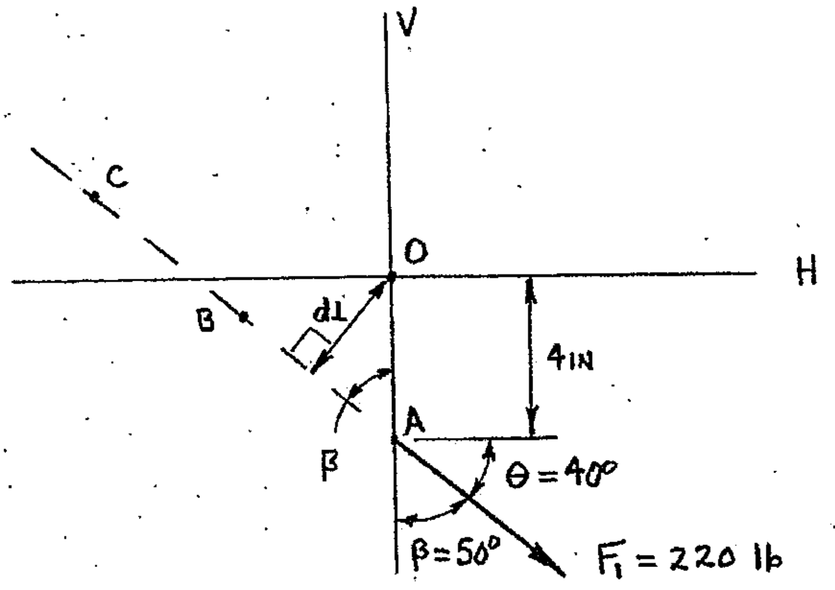

By inspecting the working diagram, it can be seen that F_1 has a counterclockwise tendency for rotation with respect to point O; so the sense of the moment caused by force F_1 about point O is ↺.

First, calculate F_1's moment arm, d⊥:

$$\sin\beta = \frac{\text{opp}}{\text{hyp}} = \frac{d_\perp}{OA}$$
$$d_\perp = (\sin\beta)(OA)$$
$$d_\perp = (\sin 50^\circ)(4\text{ in})$$
$$d_\perp = \underline{\underline{3.06418\text{ in}}}$$

Now calculate the moment of F_1 about point O:

$$M_O = (F_1)(d_\perp)$$
$$M_O = (220\text{ lb})(3.06418\text{ in})$$
$$M_O = 674.120\text{ lb-in}$$
$$M_O = \underline{\underline{674.1\text{ lb-in} \quad \circlearrowleft}}$$

cont'd.

Example 4-2: Part 2 (calculate M_O using components of F_1 applied at point A)

Working diagram for Part 2:

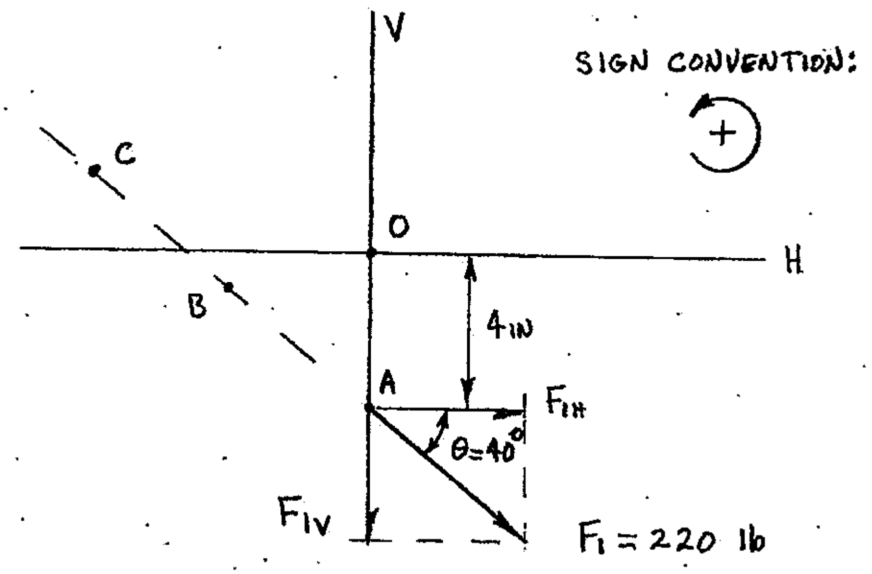

By inspecting the working diagram, it can be seen that F_{1H} causes a counterclockwise tendency for rotation about point O. The moment arm of F_{1V} is zero (0) with respect to point O, since point O lies ON the line of action of component F_{1V}.

Calculate M_O using Varignon's Theorem:

$$M_O = \sum M_{1O}$$

$$M_O = \pm\left[F_{1H}(d\perp)\right] \pm \left[F_{1V}(d\perp)\right]$$

Where: $F_{1H} = F_1 \cos\theta_1 \quad @ \quad d_\perp = 4 \text{ in} \circlearrowleft$

$F_{1V} = F_1 \sin\theta_1 \quad @ \quad d_\perp = 0$

$$M_O = +\left[(F_1 \cos\theta_1)(4 \text{ in})\right] + 0$$

$$M_O = +\left[(220 \text{ lb})(\cos 40^\circ)(4 \text{ in})\right]$$

$M_O = +674.119 \text{ lb-in}$ (plus sign indicates counterclockwise sense)

$M_O = \underline{674.1 \text{ lb-in} \circlearrowleft}$ (same as answer from Part 1)

cont'd.

Example 4-2: Part 3 (calculate M_O using components of F_1 applied at point B)

Working diagram for Part 3:

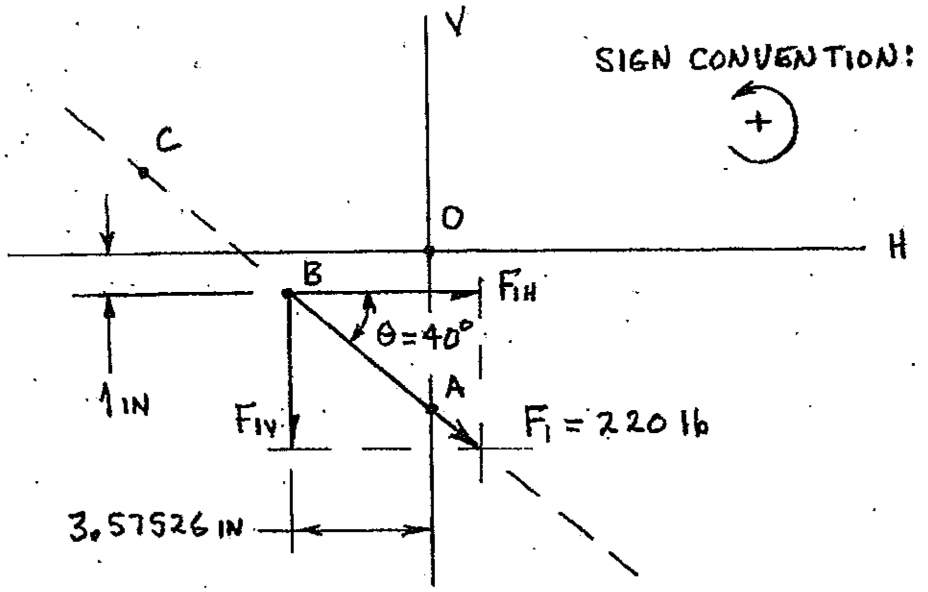

By inspecting the working diagram, it can be seen that F_{1H} causes a counterclockwise tendency for rotation about point O, as does F_{1V}.

Calculate M_O using Varignon's Theorem:

$$M_O = \sum M_{iO}$$
$$M_O = \pm[F_{1H}(d\perp)] \pm [F_{1V}(d\perp)]$$
$$\text{Where: } F_{1H} = F_1\cos\theta_1 \quad @ \quad d_\perp = 1\text{ in} \circlearrowleft$$
$$F_{1V} = F_1\sin\theta_1 \quad @ \quad d_\perp = 3.57526\text{ in} \circlearrowleft$$
$$M_O = +[(F_1\cos\theta_1)(1\text{ in})] + [(F_1)(\sin\theta_1)(3.57526\text{ in})]$$
$$M_O = +[(220\text{ lb})(\cos 40^0)(1\text{ in})] + [(220\text{ lb})(\sin 40^0)(3.57526\text{ in})]$$
$$M_O = +168.5298\text{ lb-in} + 505.5892\text{ lb-in}$$
$$M_O = +674.119\text{ lb-in} \qquad \text{(plus sign indicates counterclockwise sense)}$$
$$M_O = \underline{\underline{674.1\text{ lb-in} \circlearrowleft}} \qquad \text{(same as answers from parts 1 and 2)}$$

cont'd.

Example 4-2: Part 4 (calculate M_O using components of F_1 applied at point C)

Working diagram for Part 4:

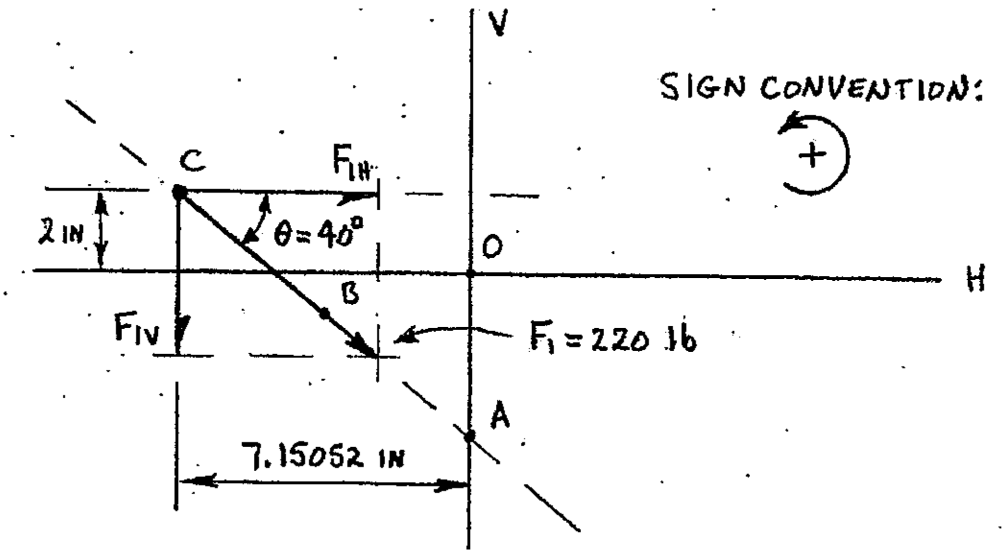

By inspecting the working diagram, it can be seen that F_{1H} causes a CLOCKWISE tendency for rotation about point O, while F_{1V} causes a COUNTERCLOCKWISE tendency for rotation about point O.

Calculate M_O using Varignon's Theorem:

$$M_O = \sum M_{iO}$$

$$M_O = \pm\left[F_{1H}(d\perp)\right] \pm \left[F_{1V}(d\perp)\right]$$

Where: $F_{1H} = F_1 \cos\theta_1 \quad @ \quad d_\perp = 2\text{ in} \circlearrowright$

$F_{1V} = F_1 \sin\theta_1 \quad @ \quad d_\perp = 7.15052\text{ in} \circlearrowleft$

$$M_O = -\left[(F_1\cos\theta_1)(2\text{ in})\right] + \left[(F_1)(\sin\theta_1)(7.15052\text{ in})\right]$$

$$M_O = -\left[(220\text{ lb})(\cos 40^\circ)(2\text{ in})\right] + \left[(220\text{ lb})(\sin 40^\circ)(7.151\text{ in})\right]$$

$$M_O = -337.0596\text{ lb-in} + 1011.1784\text{ lb-in}$$

$M_O = +674.119\text{ lb-in}$ (plus sign indicates counterclockwise sense)

$M_O = \underline{\underline{674.1\text{ lb-in} \circlearrowleft}}$ (same as answers from Parts 1, 2 and 3)

Answer:

$M_O = 674.1$ lb-in $\circlearrowleft$

VARIGNON'S THEOREM APPLIED TO A POINT THAT LIES ON A FORCE'S LINE OF ACTION

Force F in Figure 4-6 is applied at point C, its direction is 25^0 from horizontal, and its sense is downward and to the left. Point P lies ON F's line of action, at a distance of L = 20 inches from point C.

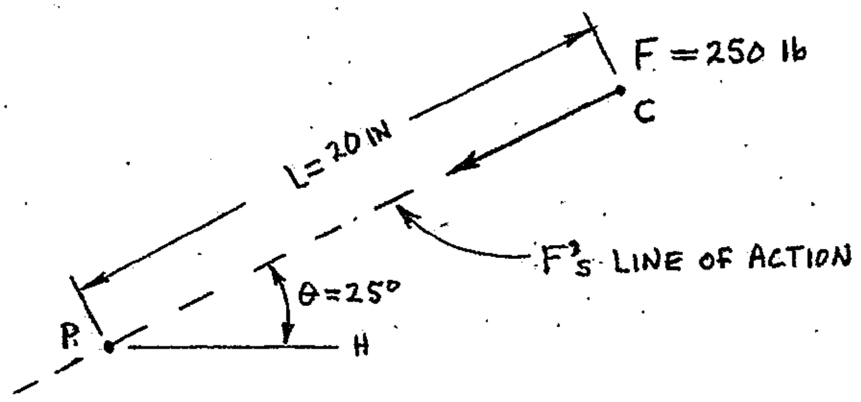

FIGURE 4-6 Force F applied at point C

The moment F causes with respect to point P is zero ($M_P = 0$), since point P lies ON F's line of action (F has moment arm = 0 about point P). From Varignon's Theorem, if the moment of F about point P is equal to zero, then the sum of the moments produced by F's components must also be equal to zero (this is shown using the diagram in Figure 4-7 and the calculations that follow).

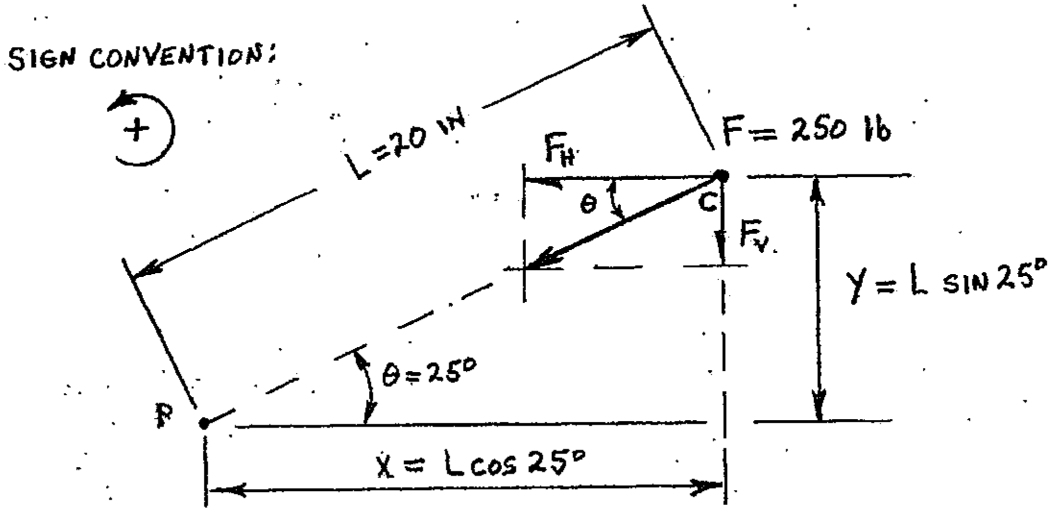

FIGURE 4-7 Working diagram of force F

By inspecting the working diagram shown in Figure 4-7 (previous page), it can be seen that F_H has a counterclockwise tendency for rotation about point P, while F_V has a clockwise tendency for rotation about point P. Using Varignon's Theorem to calculate the moment M_P:

$$M_P = \sum M_{iP}$$

$$M_P = \pm[(F_H)(d_\perp)] \pm [(F_V)(d_\perp)]$$

Where: $F_H = F\cos\theta$ @ $d_\perp = y = L\sin\theta$ ↺

$F_V = F\sin\theta$ @ $d_\perp = x = L\cos\theta$ ↻

$$M_P = +[(F\cos\theta)(L\sin\theta)] - [(F\sin\theta)(L\cos\theta)]$$

$$M_P = +[(250\text{ lb})(\cos 25^0)(20\text{ in})(\sin 25^0)] - [(250\text{ lb})(\sin 25^0)(20\text{ in})(\cos 25^0)]$$

$$M_P = +1915.11\text{ lb-in} - 1915.11\text{ lb-in}$$

$$M_P = \underline{\underline{0}}$$

CONSTRUCTING PERPENDICULAR COMPONENTS ON A WORKING DIAGRAM

A force (F) is applied at point A on the square plate shown in Figure 4-8. If the moment of force F about point C was to be determined, it would be convenient to employ Varigon's Theorem and calculate the moment using the vertical and horizontal components of F.

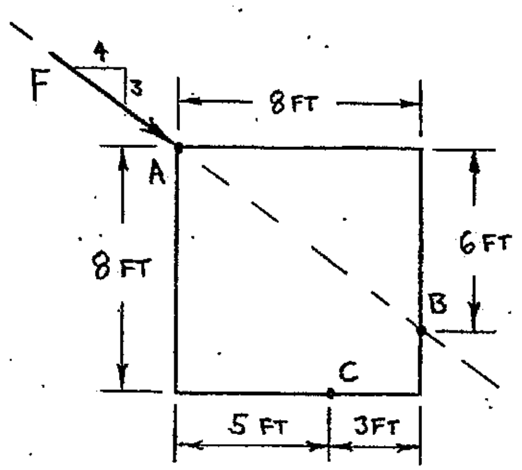

FIGURE 4-8 Force F applied to a square plate.

However, the perpendicular components must be CORRECTLY shown on the working diagram, as seen in Figure 4-9 (following page, left side). The components (and the force) must always come together with like parts (heads-on-head-on-heads, or tails-on-tails-on-tails) AT SOME KNOWN REFERENCE (typically the point of application).

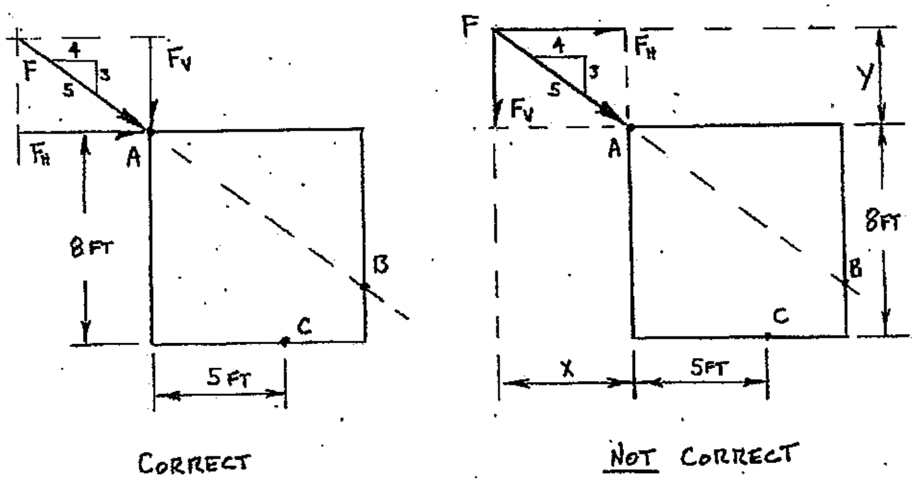

FIGURE 4-9 Constructing components when force F is applied at point A

Remember, the moment arm is the perpendicular distance between the force's (or component's) line of action and a point (or axis). Using the correct (left side) diagram from Figure 4-9, the moment arms for the components measured with respect to point C are 8-ft for F_H and 5-ft for F_V. For the incorrect diagram shown on the right, the moment arms of the components about point C appear to be (8-ft + y) for F_H, and (5-ft + x) for F_V, **and x and y are <u>unknown</u>**.

The force F shown in Figure 4-8 (previous page) could also be moved along its line of action using the principle of transmissibility, and in Figure 4-10 force F is shown applied at point B. Again, perpendicular components are constructed and will be used to determine the moment with respect to point C.

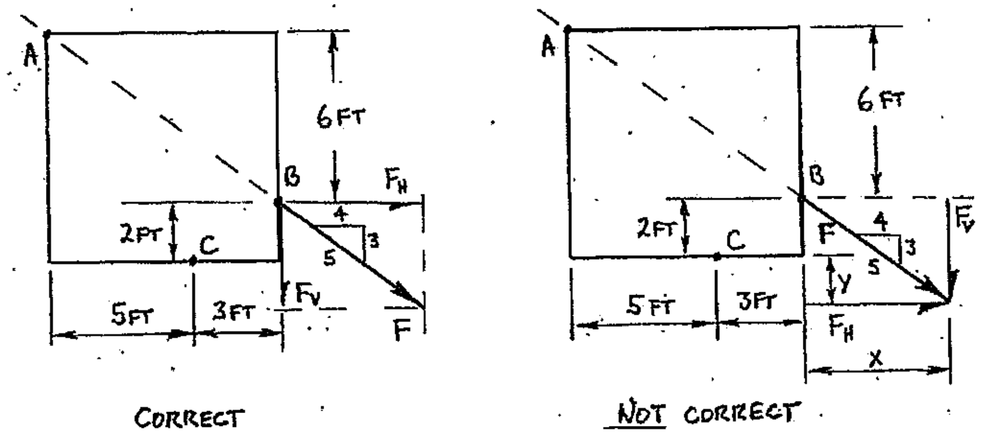

FIGURE 4-10 Constructing components when force F is applied at point B

Using the correct (left side) diagram from Figure 4-10, the moment arms for the components with respect to point C are 2-ft for F_H and 3-ft for F_V. For the incorrect diagram shown on the right, the moment arms of the components with respect to point C appear to be (y) for F_H, and (3-ft + x) for F_V, **and x and y are again <u>unknown</u>**. Only the left-side diagram (in Figures 4-9 and 4-10) could be used to CORRECTLY develop the moment arms of the components with respect to point C.

Orientation of Perpendicular Axes

Horizontal and vertical perpendicular axes have been used in all examples thus far as a matter of convenience. Since many dimensions (and angles) are referenced from either horizontal or vertical axes, these axes have also been used to develop any perpendicular components used in the solutions. However, in some cases rotating the perpendicular axes may lead to a more efficient solution.

Consider the bracket shown in Figure 4-11. The bracket is welded to a vertical column, and two forces are applied as shown. The top of the bracket is inclined at 20^0 from horizontal. Notice that both the length dimensions and the angles are referenced from something other than horizontal and vertical axes. The length dimensions are measured ALONG the inclined top surface of the bracket. Force F_1's direction is referenced from a line that is perpendicular to the top surface of the bracket, while force F_2's line of action is referenced from a line extended from the top surface of the bracket. Horizontal and vertical axes *could* be used if Varignon's Theorem were applied to calculate the total moment of this force system about point A. However, you would have to calculate the moment arm for EACH horizontal and vertical component since none of these moment arms exist on the given diagram.

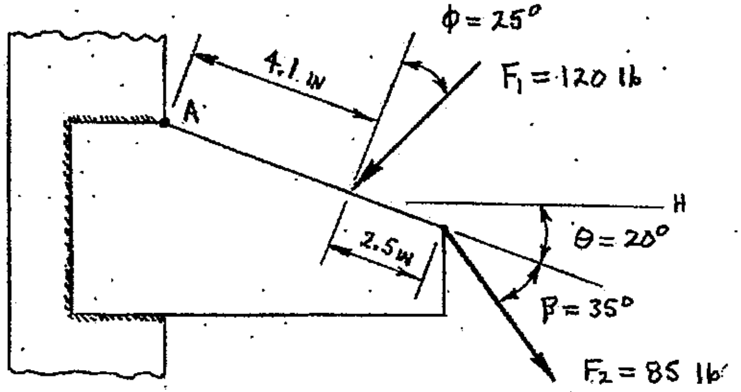

FIGURE 4-11 Bracket welded to vertical column

A more efficient solution to determine the moment about point A could be found by first constructing a set of perpendicular axes such that one axis (X-axis) lies along the top surface of the bracket, and the second axis (Y-axis) is perpendicular to the top surface of the bracket (this set of X-Y axes has been rotated 20^0 clockwise from a set of vertical and horizontal axes) as shown in the working diagram seen in Figure 4-12 (following page). Once X and Y components are constructed for each force, it can be seen that the moment arms for both X-components (F_{1X} and F_{2X}) are equal to zero (0), since point A lies ON their lines of action. The moment arms for the Y-components are also easy to determine directly from the diagram: F_{1Y}'s and F_{2Y}'s moment arms are 4.1-in and 6.6-in respectively. A complete solution to this problem is demonstrated in Example 4-5, beginning on page 4-28.

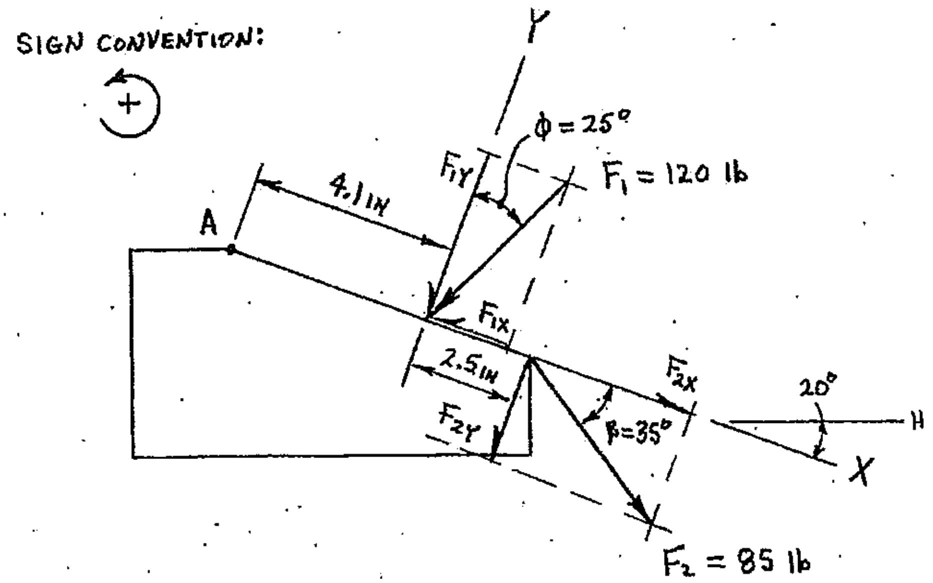

FIGURE 4-12 Working diagram for the bracket, using X and Y axes

A common MISTAKE is to change the GIVEN ORIENTATION of an object (or system). Figure 4-13 shows an incorrect working diagram of the bracket from Figure 4-11. The bracket has been rotated 20^0 counterclockwise so that the top surface of the bracket is horizontal; this would allow horizontal and vertical perpendicular axes to be used for developing components of F_1 and F_2.

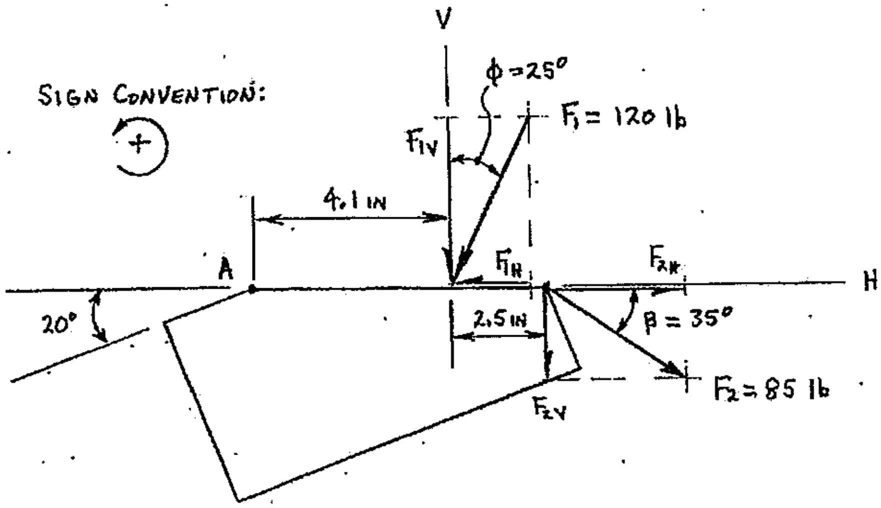

FIGURE 4-13 An INCORRECT working diagram for the bracket shown in Figure 4-11

A "correct" answer could be developed using the incorrect working diagram shown in Figure 4-13. The moment arms for both horizontal components (F_{1H} and F_{2H}) would be equal to zero. The moment arm for F_{1V} would be 4.1-in and the moment arm for F_{2V} would be 6.6-in. Summation of moments would return the same answer (magnitude and sense) as work developed from the correct working diagram shown in Figure 4-12.

However, if the weight of the bracket was to be included in the total moment produced about point A, then any rotation of the bracket in a working diagram becomes impossible. ANY FORCE DUE TO A WEIGHT MUST ALWAYS HAVE A DOWNWARD SENSE ALONG A VERTICAL LINE OF ACTION, as shown in Figure 4-14.

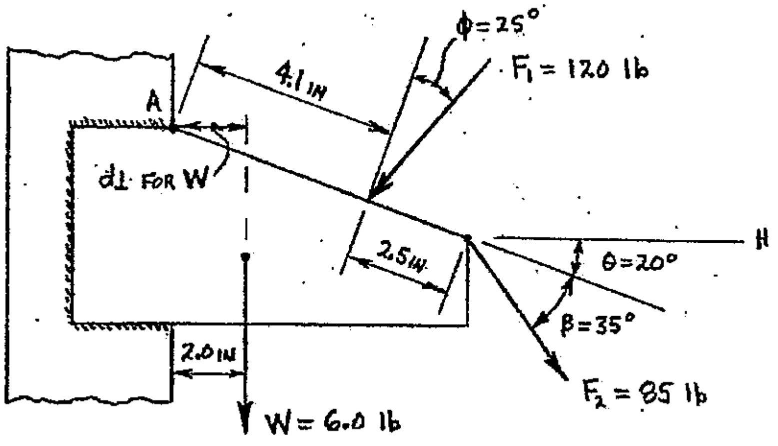

FIGURE 4-14 Bracket welded to a vertical column; weight of bracket included

Two different mistakes are common when incorrectly changing the orientation of an object when a force due to weight is involved. The first mistake is to rotate the weight's line of action when rotating an object from its given orientation (as shown in Figure 4-15). In this case, the weight's line of action is now shown as 20^0 clockwise from vertical, which is incorrect since THE WEIGHT'S LINE OF ACTION MUST ALWAYS BE VERTICAL.

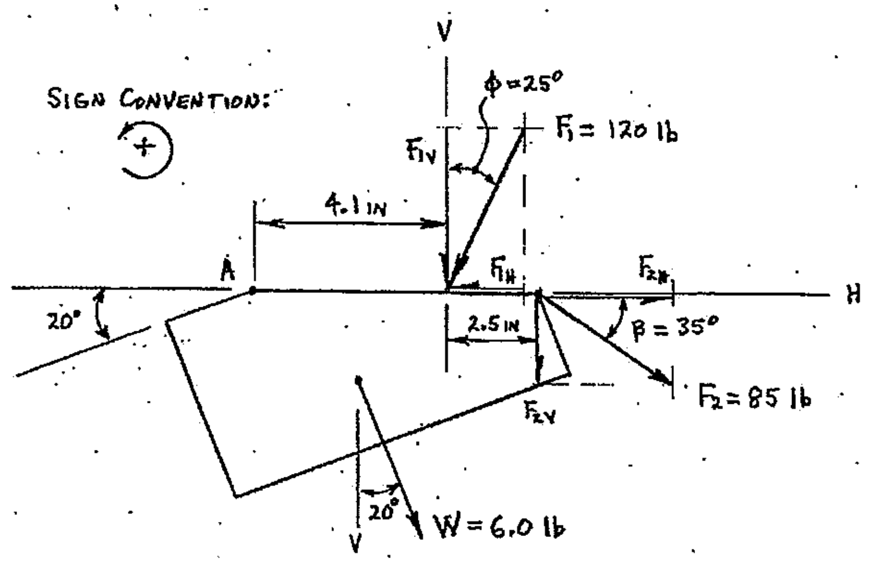

FIGURE 4-15 INCORRECT working diagram; weight's line of action is incorrect

The second common mistake is shown in Figure 4-16 (following page). In this case, the bracket has again been rotated 20^0 counterclockwise so that its top surface is horizontal. The weight is shown correctly in the working diagram (directed downward along a vertical line of action). However, the weight's line of action as shown in this

diagram WILL RESULT IN A DIFFERENT (LARGER) MOMENT ARM when compared to the correct (2.0-in) moment arm of the weight as shown in Figure 4-14 (previous page).

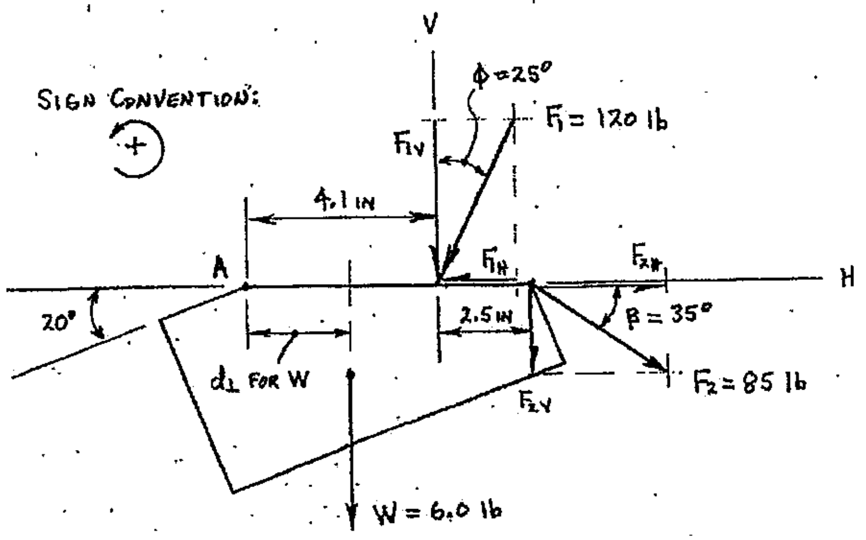

FIGURE 4-16 INCORRECT working diagram; however, weight's line of action IS correct

Perpendicular axes can be constructed at any orientation that will lead to an efficient solution for a problem. However, **THE GIVEN ORIENTATION OF AN OBJECT (OR SYSTEM) CAN NOT BE CHANGED WHEN DEVELOPING A WORKING DIAGRAM.**

SUMMARY

In the most general terms, a moment is the product of a quantity and the perpendicular distance from the quantity to some reference. A force moment is the product of a force's magnitude and the perpendicular distance between the force's line of action and a reference (typically a point or an axis). A moment is a vector quantity and has magnitude, direction, sense, and a point of application. A sign convention must be established and used consistently whenever moments must be summed to find the total moment at a particular location (point or axis).

The magnitude of a moment can typically be found using one of two methods. By definition, the magnitude of a moment is the product of a force's magnitude and the perpendicular distance between the force's line of action and a reference point or axis. A moment can also be calculated by using the force's components (Varignon's Theorem); the individual moments caused by the components are summed to find the moment of the original force.

Components shown on working diagrams must always be constructed such that the components (and their associated force) come together with like parts (heads-on-heads-on-heads, or tails-on-tails-on-tails) AT SOME KNOWN REFERENCE (typically the point of application) so that moment arms are shown correctly.

The force due to a weight must always be shown with a downward sense that acts along a vertical line of action. **THE <u>GIVEN ORIENTATION</u> OF AN OBJECT (OR SYSTEM) CAN NOT BE CHANGED (ROTATED) WHEN CONSTRUCTING A WORKING DIAGRAM**, however the perpendicular axes used to develop force components can be at any orientation that is convenient and allows an efficient problem solution.

<u>FURTHER EXAMPLE PROBLEMS</u> (solutions in GFSA format are on the following pages)

Example 4-3 A force system consists of two forces as shown below. Calculate the total moment of the force system with respect to point A.

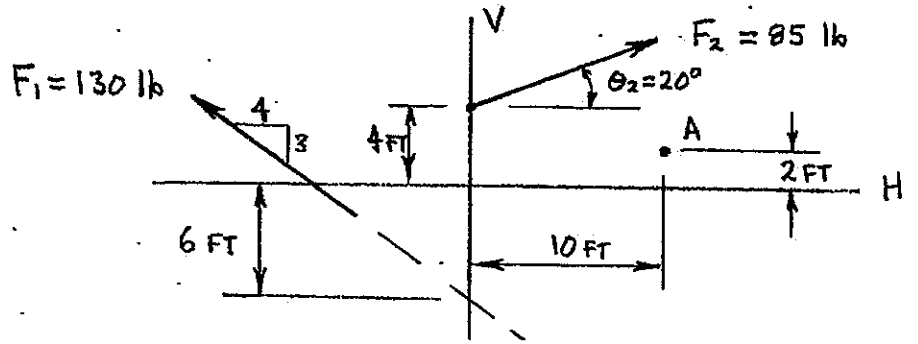

Example 4-4 A system of three forces acts on the rectangular plate shown below. Determine the total moment caused by the force system with respect to point B.

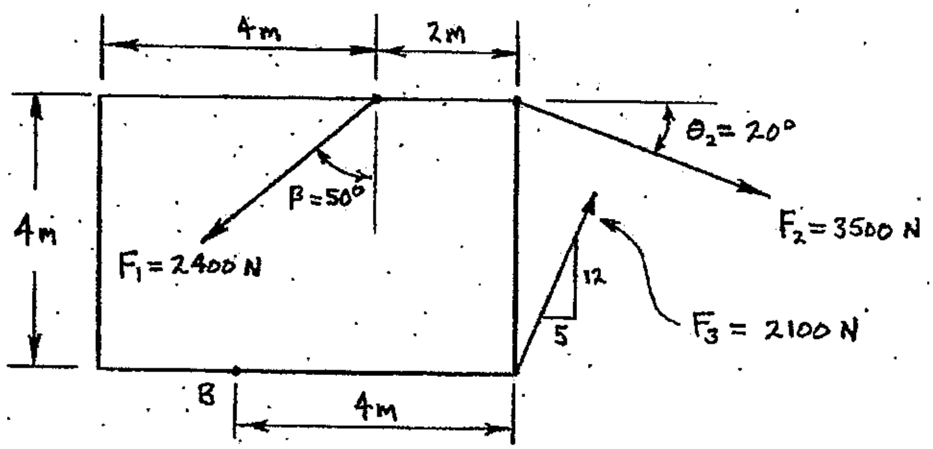

Example 4-5 A bracket is welded to a vertical column, and two forces are applied to the bracket as shown below. Determine the total moment produced by the force system with respect to point A.

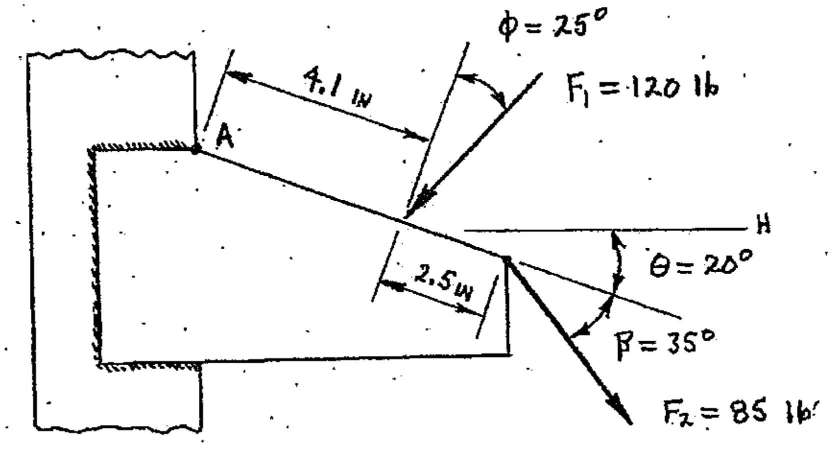

PROBLEM: EXAMPLE 4-3

GIVEN: THE FORCE SYSTEM SHOWN BELOW.

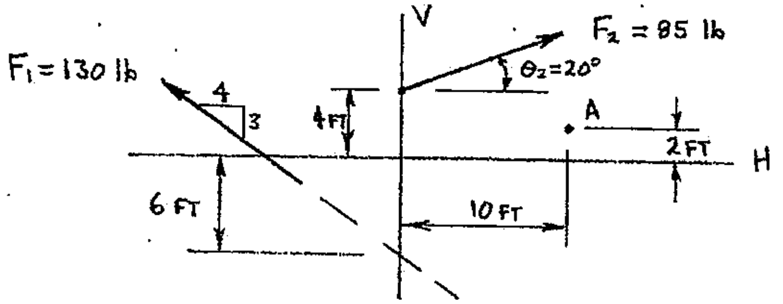

FIND: CALCULATE THE TOTAL MOMENT OF THE FORCE SYSTEM WITH RESPECT TO POINT A.

SOLUTION:

WORKING DIAGRAM:

SIGN CONVENTION:

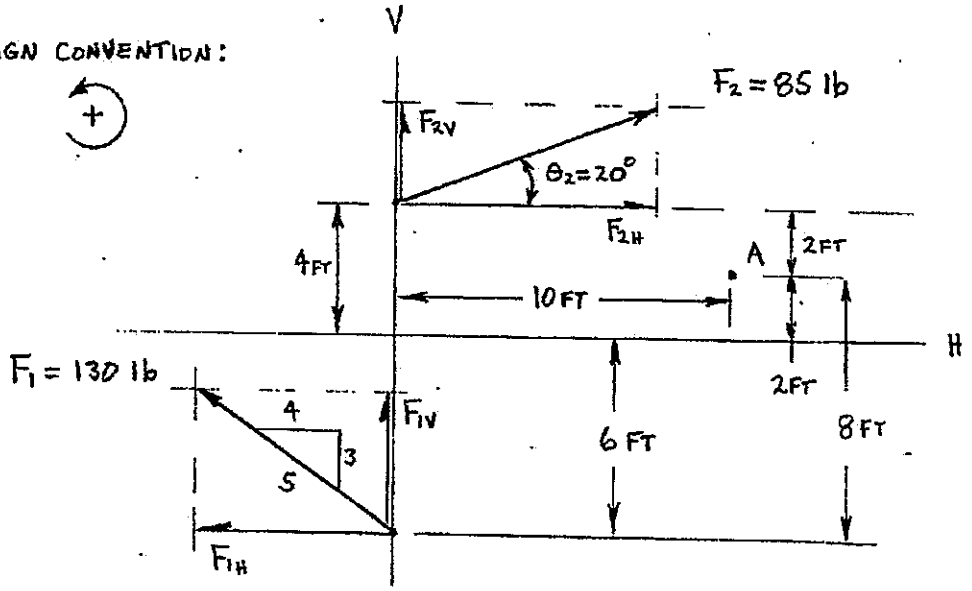

SUMMING MOMENTS ABOUT POINT A:

$$M_A = \Sigma M_{iA}$$

$$M_A = \pm[(F_{1H})(d\perp)] \pm [(F_{1V})(d\perp)] \pm [(F_{2H})(d\perp)] \pm [(F_{2V})(d\perp)]$$

WHERE: $F_{1H} = (4/5)F_1$ @ $d\perp = 8$ FT ↻

$F_{1V} = (3/5)F_1$ @ $d\perp = 10$ FT ↻

CONT'D.

PROBLEM: EXAMPLE 4-3 (CONT'D.)

$F_{2H} = F_2 \cos\theta_2$ @ $d\perp = 2\,FT$ ↻

$F_{2V} = F_2 \sin\theta_2$ @ $d\perp = 10\,FT$ ↻

$$M_A = -[(4/5)(F_1)(8\,FT)] - [(3/5)(F_1)(10\,FT)] - [(F_2\cos\theta_2)(2\,FT)] - [(F_2\sin\theta_2)(10\,FT)]$$

$$M_A = -[(4/5)(130\,lb)(8\,FT)] - [(3/5)(130\,lb)(10\,FT)] - [(85\,lb)(\cos 20^\circ)(2\,FT)] - [(85\,lb)(\sin 20^\circ)(10\,FT)]$$

$$M_A = -832\,lb\cdot FT - 780\,lb\cdot FT - 159.748\,lb\cdot FT - 290.717\,lb\cdot FT$$

$$M_A = -2062.47\,lb\cdot FT$$

$$M_A = 2062.47\,lb\cdot FT \text{ ↻}$$

ANSWER:

$M_A = 2062\,lb\cdot FT$ ↻

PROBLEM: EXAMPLE 4-4

GIVEN: THREE FORCES ARE APPLIED TO A RECTANGULAR PLATE AS SHOWN BELOW.

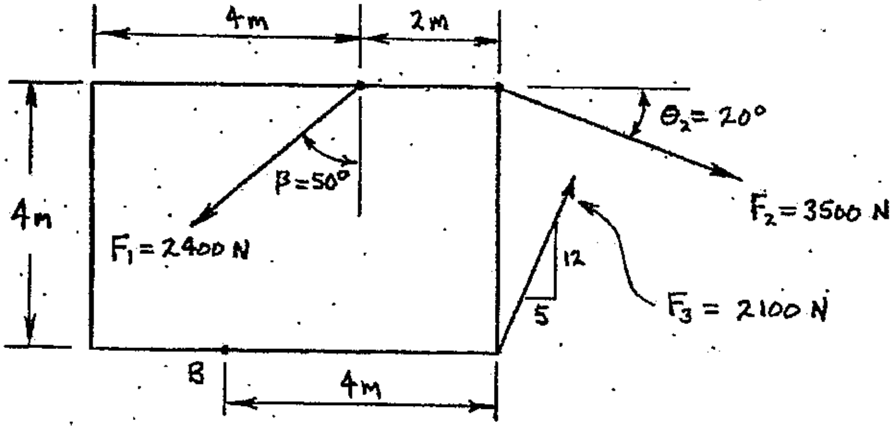

FIND: DETERMINE THE TOTAL MOMENT CAUSED BY THE FORCE SYSTEM WITH RESPECT TO POINT B.

SOLUTION:

WORKING DIAGRAM:

SIGN CONVENTION:

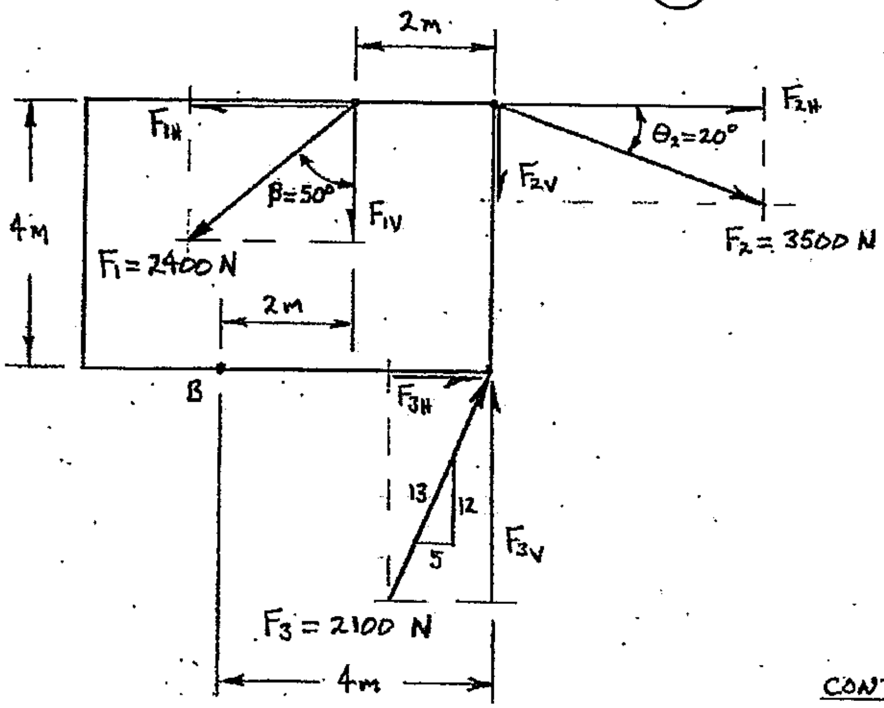

CONT'D.

PROBLEM: EXAMPLE 4-4

$$M_B = \Sigma M_{iB}$$

$$M_B = \pm[(F_{1H})(d\perp)] \pm [(F_{1V})(d\perp)] \pm [(F_{2H})(d\perp)] \pm [(F_{2V})(d\perp)] \pm [(F_{3H})(d\perp)] \pm [(F_{3V})(d\perp)]$$

WHERE:

$F_{1H} = F_1 \sin\beta$ @ $d\perp = 4\,m$ $\circlearrowleft$

$F_{1V} = F_1 \cos\beta$ @ $d\perp = 2\,m$ $\circlearrowright$

$F_{2H} = F_2 \cos\theta_2$ @ $d\perp = 4\,m$ $\circlearrowright$

$F_{2V} = F_2 \sin\theta_2$ @ $d\perp = 4\,m$ $\circlearrowright$

$F_{3H} = (5/13) F_3$ @ $d\perp = 0$

$F_{3V} = (12/13) F_3$ @ $d\perp = 4\,m$ $\circlearrowleft$

$$M_B = +[(F_1 \sin\beta)(4m)] - [(F_1 \cos\beta)(2m)] - [(F_2 \cos\theta_2)(4m)] - [(F_2 \sin\theta_2)(4m)] + 0 + [(12/13)(F_1)(4m)]$$

$$M_B = +[(2400\,N)(\sin 50^\circ)(4m)] - [(2400\,N)(\cos 50^\circ)(2m)] - [(3500\,N)(\cos 20^\circ)(4m)] - [(3500\,N)(\sin 20^\circ)(4m)] + [(12/13)(2100\,N)(4m)]$$

$$M_B = +7354.03\,N\cdot m - 3085.38\,N\cdot m - 13{,}155.7\,N\cdot m - 4788.28\,N\cdot m + 7753.85\,N\cdot m$$

$$M_B = -5921.48\,N\cdot m$$

$$M_B = \underline{\underline{5921.48\,N\cdot m \circlearrowright}}$$

ANSWER:

$M_B = 5921\,N\cdot m$ $\circlearrowright$

PROBLEM: EXAMPLE 4-5

GIVEN: TWO FORCES ARE APPLIED TO A BRACKET AS SHOWN BELOW. THE BRACKET IS WELDED TO A VERTICAL COLUMN.

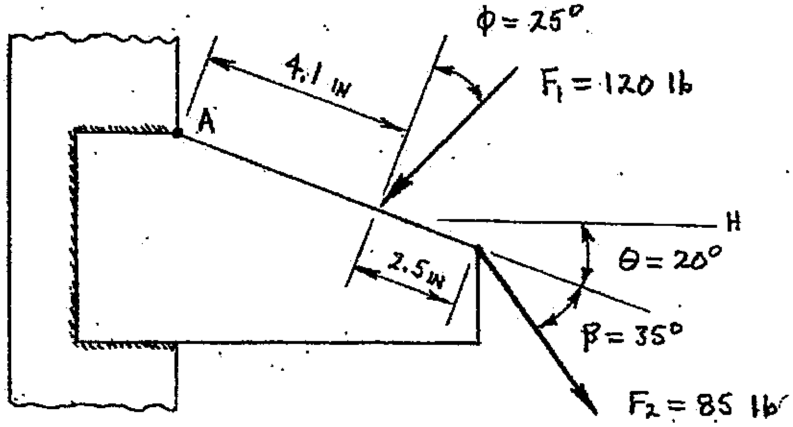

FIND: DETERMINE THE TOTAL MOMENT PRODUCED BY THE FORCE SYSTEM WITH RESPECT TO POINT A.

SOLUTION:

WORKING DIAGRAM: PERPENDICULAR AXES HAVE BEEN CONSTRUCTED ALONG (X-AXIS) AND PERPENDICULAR TO (Y-AXIS) THE TOP SURFACE OF THE BRACKET.

SIGN CONVENTION:

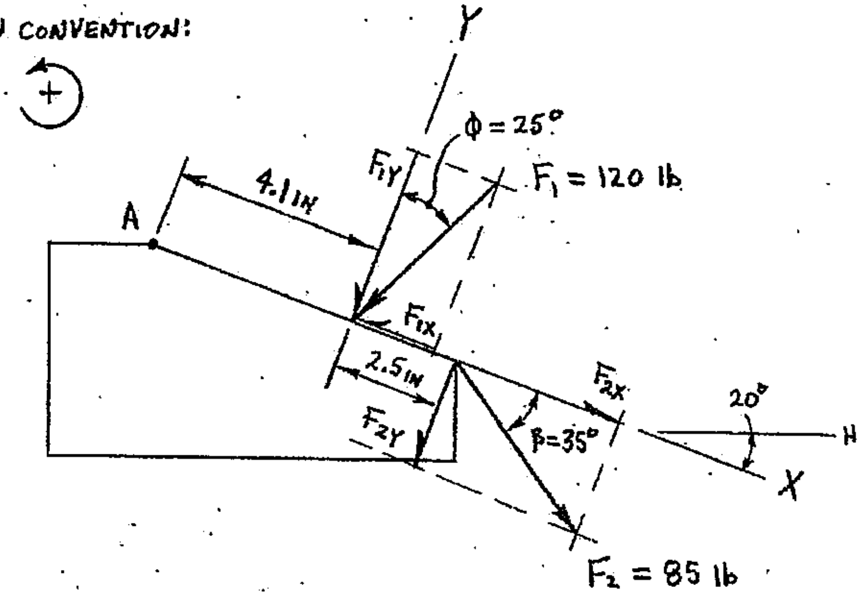

CONT'D.

PROBLEM: EXAMPLE 4-5 (CONT'D.)

$M_A = \Sigma M_{iA}$

$M_A = \pm[(F_{1X})(d\perp)] \pm [(F_{1Y})(d\perp)] \pm [(F_{2X})(d\perp)] \pm [(F_{2Y})(d\perp)]$

WHERE: $F_{1X} = F_1 \sin\phi$ @ $d\perp = 0$

$F_{1Y} = F_1 \cos\phi$ @ $d\perp = 4.1$ IN ↻

$F_{2X} = F_2 \cos\beta$ @ $d\perp = 0$

$F_{2Y} = F_2 \sin\beta$ @ $d\perp = 6.6$ IN ↻

$M_A = +0 - [(F_1 \cos\phi)(4.1 \text{ IN}) + 0 - [(F_2 \sin\beta)(6.6 \text{ IN})]$

$M_A = -[(120 \text{ lb})(\cos 25°)(4.1 \text{ IN})] - [(85 \text{ lb})(\sin 35°)(6.6 \text{ IN})]$

$M_A = -445.903 \text{ lb-IN} - 321.776 \text{ lb-IN}$

$M_A = -767.679 \text{ lb-IN}$

$M_A = \underline{\underline{767.679 \text{ lb-IN}}}$ ↻

ANSWER:

$M_A = 767.7$ lb-IN ↻

PRACTICE PROBLEMS

4.1 Calculate the moment with respect to point O.

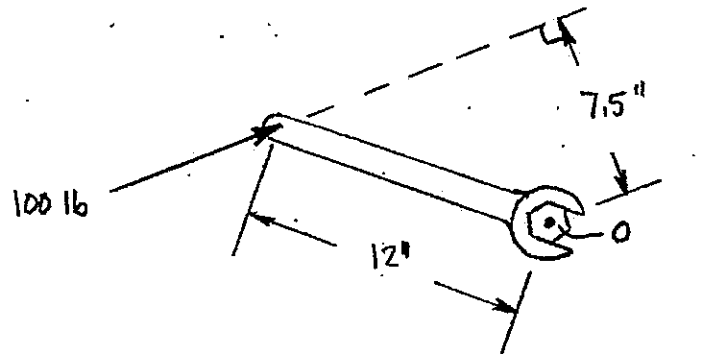

4.2 A V-belt has tensions as shown below. The pulley radius is 150 mm. Calculate the total moment about point O.

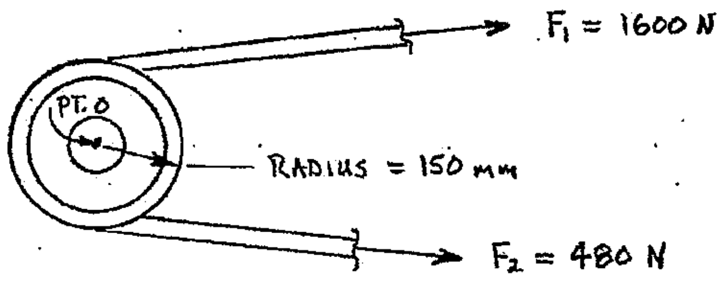

4.3 A cantilever bracket has forces applied as shown. Calculate the moment about point B.

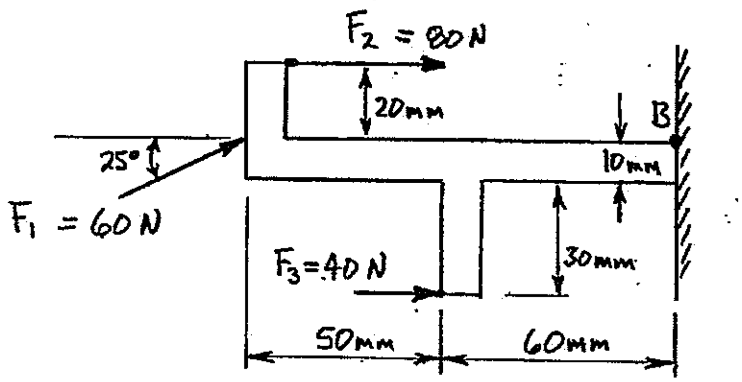

PRACTICE PROBLEMS

4.4 Two forces are applied to a large rectangular plate as shown below. Calculate the total moment (lb-ft) with respect to point A.

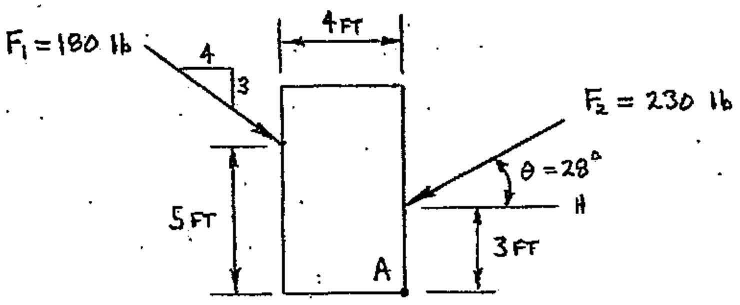

4.5 Determine the total moment caused by the force system shown below with respect to point A.

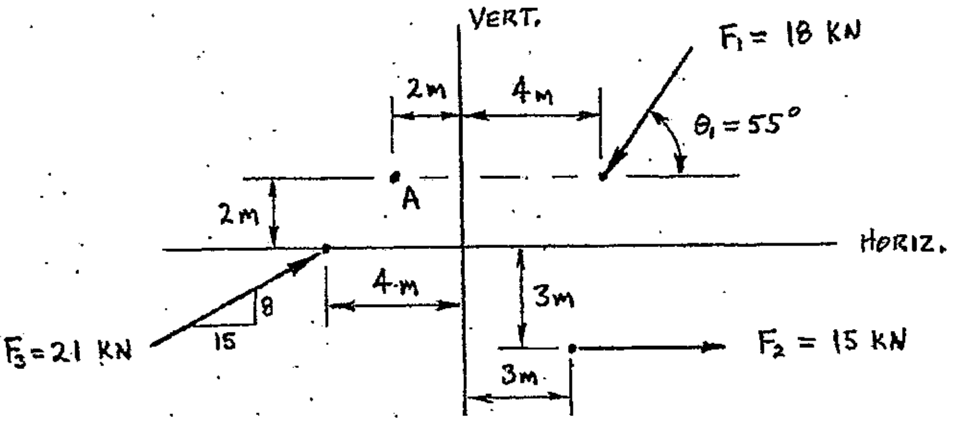

4.6 Three forces are applied to a plate as shown below. Determine the total moment of the force system about point C.

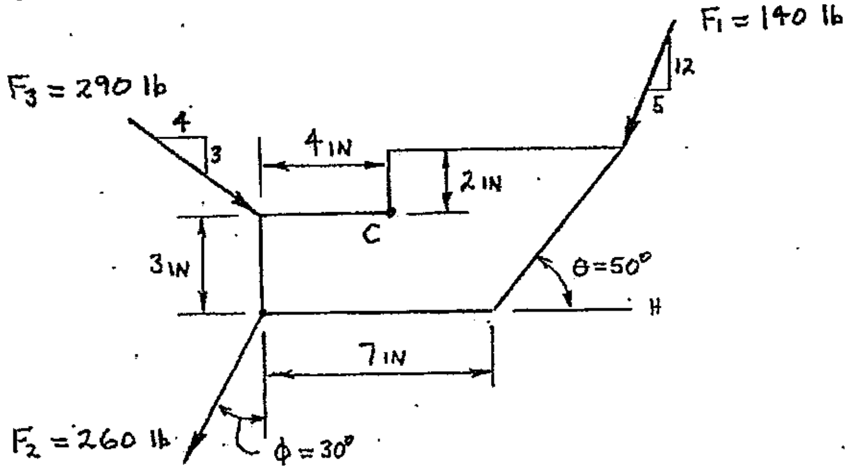

PRACTICE PROBLEMS

4.7 Two forces are applied to a triangular plate as shown below. Calculate the total moment produced with respect to point B.

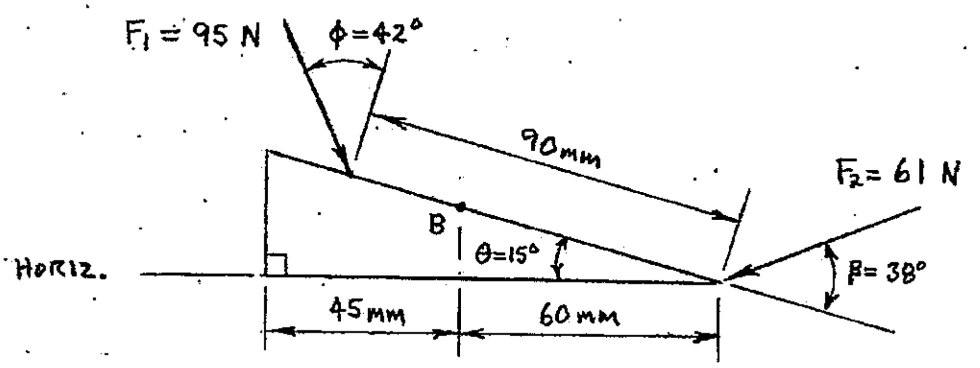

4.8 Forces are applied to a plate as shown below. Determine the total moment with respect to point A.

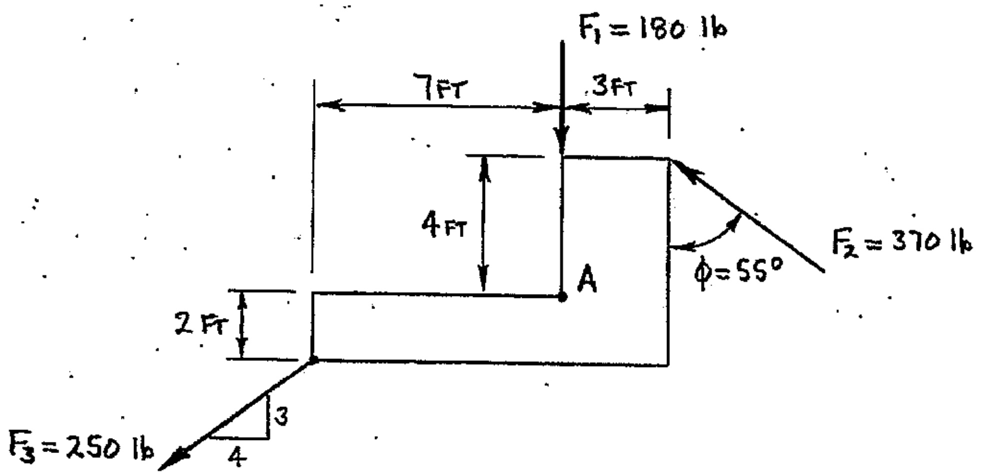

The force system shown in Figure 5-1 represents an example of a non-concurrent, coplanar system composed of five forces. The force system is two-dimensional (coplanar), and the line of action of each force does not pass through a common point (the forces are non-concurrent). Systems of this type will simply be referred to as "coplanar" force systems.

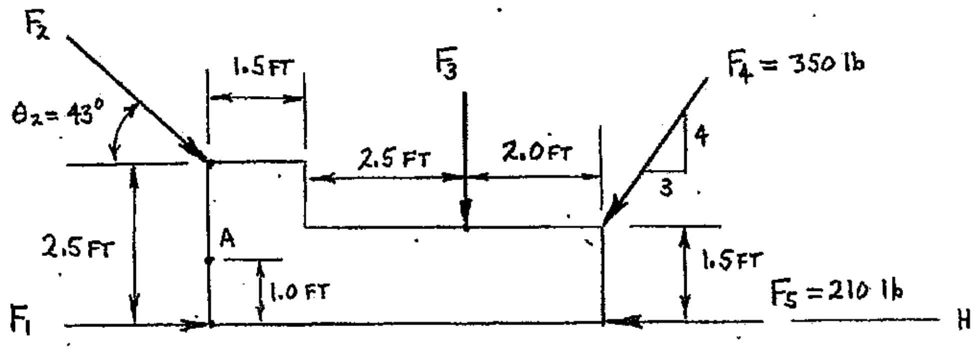

Figure 5-1 A coplanar force system

Static equilibrium can be defined as "a balance between any and all influences". Each force shown in Figure 5-1 provides a linear influence, a push or pull along its line of action. Each force also causes a rotational influence (a moment) with respect to point A. And because the force system is non-concurrent, there is at least some rotational influence at any point in the plane of this system.

Static equilibrium occurs when the outcome (the resultant) of all influences is equal to zero. So, for static equilibrium of a coplanar force system the sum of the forces and the sum of the moments must both be equal to zero. The general relationships for static equilibrium of coplanar forces systems are:

$$\Sigma F = 0 \qquad \text{and:} \qquad \Sigma M = 0$$

The initial statements used to establish static equilibrium for coplanar force systems are shown below. Force equilibrium equations are developed for two perpendicular directions (X and Y in the equations below). Moment equilibrium equations can be developed for ANY point in the plane of the force system (you choose the point, and **the point is not required to be on an object**).

$\Sigma F_X = 0$

$\Sigma F_Y = 0$ (where Y is a direction perpendicular to X)

$\Sigma M_P = 0$ (subscript P is any point in the plane of the force system)

When forces are applied to an object (as shown in Figure 5-1), the object will remain in static equilibrium if the force system applied to the object is in static equilibrium.

A coplanar force system is applied to the rectangular bar shown in Figure 5-2A, and the bar is not in static equilibrium. However, the bar *could* be in static equilibrium if one additional force (F_4) was applied at point A as shown in Figure 5-2B. A typical problem statement for the rectangular bar shown in Figure 5-1A could be: "Determine the horizontal force (F_4, not shown) that must be applied at point A so that the bar will be in static equilibrium". To solve this problem, the first step would be to construct a diagram of the object and the original force system, and then add to that diagram the unknown force (F_4) that would be required for static equilibrium (this is shown in Figure 5-2B). The unknown force must be added to the diagram using the direction (horizontal) given in the problem statement, and the force's magnitude and sense must be clearly shown. It is VERY important to note that although F_4 was shown in Figure 5-2B with a particular magnitude (length) and sense (arrowhead; to the right), these initial characteristics are ASSUMPTIONS. The actual magnitude and sense of force F_4 are unknown and must be determined through additional work.

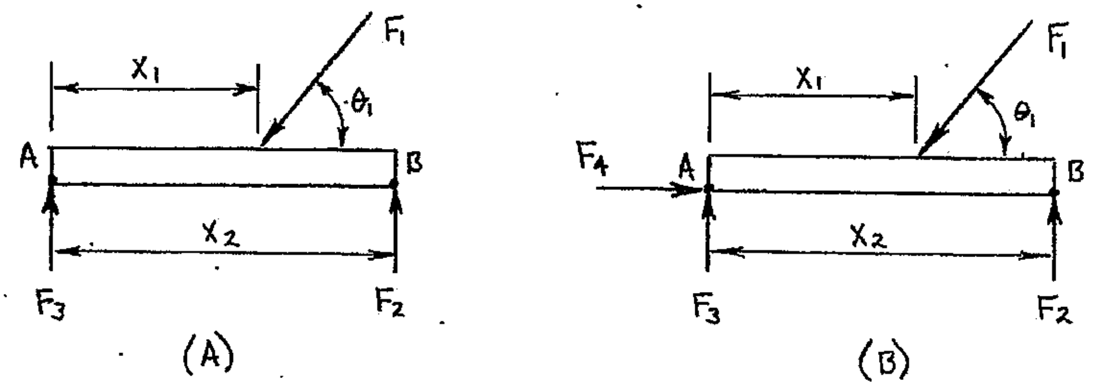

Figure 5-2 (A and B) Two coplanar force systems

It is also common to be given a diagram such as the one shown in Figure 5-2B, along with a problem statement similar to the following: "Determine the horizontal force F_4 required so that the rectangular bar shown in Figure 5-1B remains in static equilibrium". Again, it is VERY IMPORTANT to note that *even though force F_4 has been shown* on the given diagram, the only characteristics of F_4 that are known are its direction (horizontal) and point of application (point A). Force F_4's magnitude and sense have been **ASSUMED** on the given diagram, and must be determined through further work.

There are three independent equilibrium equations available for establishing static equilibrium of coplanar force systems: $\Sigma F_X = 0$, $\Sigma F_Y = 0$, and $\Sigma M_P = 0$. With three available independent equilibrium equations, static equilibrium can be applied to solve coplanar force systems with a maximum of three unknowns. So, the coplanar force systems used in this chapter's examples and practice problems will have either one, two or three unknowns depending on the problem. The directions and points of application will typically be the only known characteristics of unknown forces.

SOLUTION PROCEDURE

A very structured solution procedure is outlined below, and it must be followed when solving the practice problems at the end of this chapter. This procedure, if followed correctly and in the order shown, will result in completely independent solutions for one, or as many as three, unknowns. Answers generated from independent solutions can then be checked/verified by solving the equilibrium equations that were not used in the original solution.

Procedure:

a) Construct an initial working diagram. Assume a sense for any unknown forces (if none was given). Do not show the perpendicular components of any known or unknown forces at this time. Establish a sign convention.
b) Extend the lines of action for each of the UNKNOWN forces (extend the lines outward from both the arrowhead and the tail of the force vector). Do NOT extend the lines of action for any known forces.
c) Locate and label (if not already labeled) all intersections of the extended lines of action. Label the intersection points with letters.
d) Develop an equilibrium equation by summing moments at one of the intersection points of the extended lines of action. Inspect the equation, and if it contains only one unknown force, then that unknown force can be found.
e) Return to the working diagram and add perpendicular components for any forces (known or unknown) that are required for the solution of the moment equation developed in preceding step (item d), and then solve the equation.
f) CONTINUE TO DEVELOP (AND SOLVE) MOMENT EQUILIBRIUM EQUATIONS FOR EACH AND EVERY POINT LOCATED WHERE THE ORIGINAL UNKNOWN FORCES' LINES OF ACTION INTERSECT (repeat items d and e for every intersection point).
g) If there are still unknown forces after developing (and solving) moment equilibrium equations at all intersection points, then develop (and solve) a force equilibrium equation in one (or both) of the two perpendicular directions.
h) Any equilibrium equations not used to solve for unknown forces can now be used to check your solution, provided the solution values (forces) were developed from independent equations (equations that did not require force values solved for in previous equations).
i) Report your answers completely (magnitude, direction and sense).

The procedure outlined above is followed in Example 5-1 (following page) and all other examples shown in this chapter. All practice problems must be solved by following this procedure.

Example 5-1 Five forces are applied to an object as shown below. Determine forces F_1, F_2 and F_3 that are required to maintain static equilibrium.

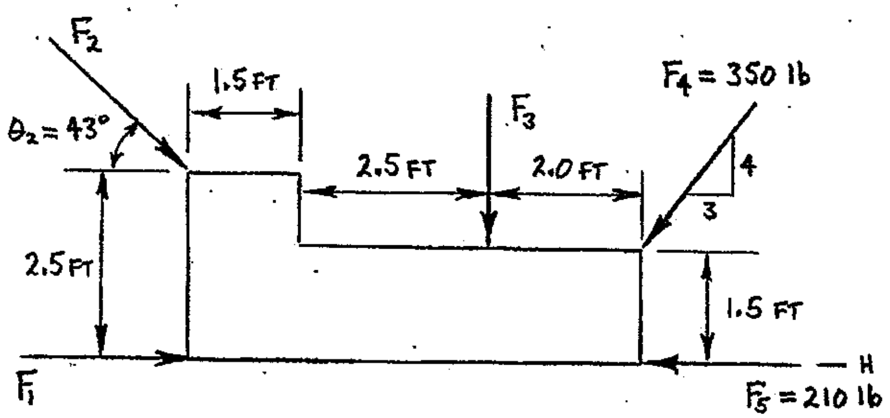

A working diagram of the object is constructed, and all forces are shown. The lines of action are extended for each of the unknown forces (F_1, F_2 and F_3). A sign convention is established by overlaying the rotational (moment) sign convention onto the force sign convention. These steps are shown on the partial working diagram:

<u>WORKING DIAGRAM</u>: (partial)

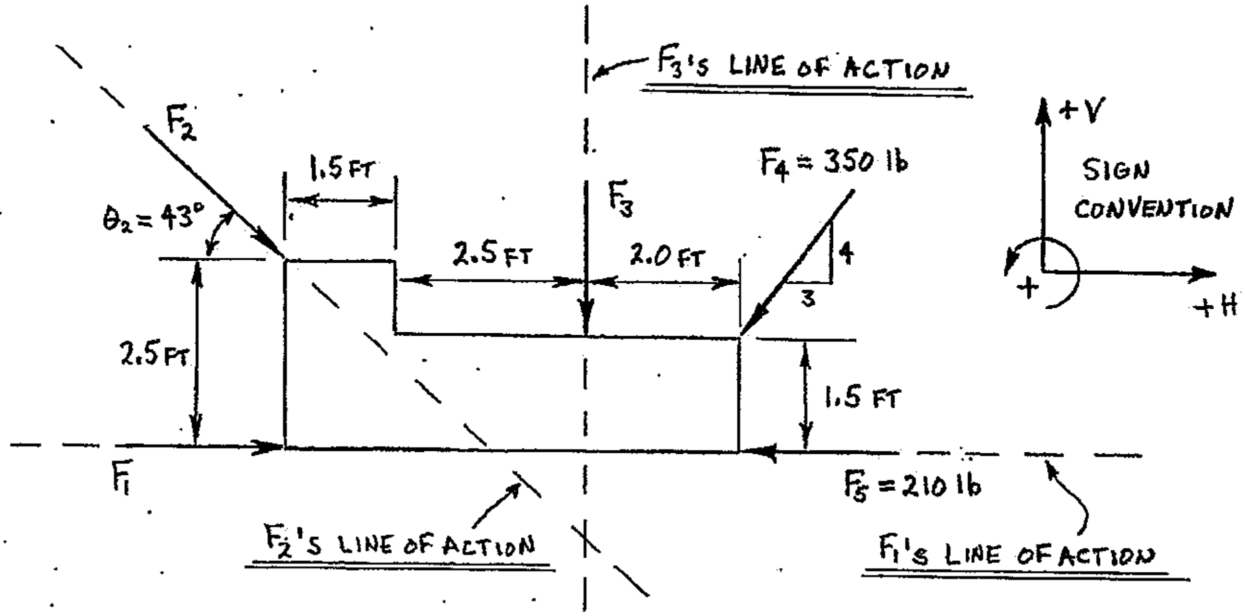

<u>cont'd.</u>

Example 5-1: (cont'd.)

Points are then located and labeled (A, B and C) where the unknown force's lines of action intersect (see the completed working diagram shown below). A moment equilibrium equation will be written for each of these three points, so the location of these points is <u>IMPORTANT</u> (for establishment of moment arms). Calculations may be required to locate the points from known references. Vertical and horizontal components can also now be added for forces F_2 and F_4 (remember, do <u>NOT</u> add components until *after* extending the lines of action of the unknown forces).

<u>INITIAL WORKING DIAGRAM</u>: (continued, and complete)

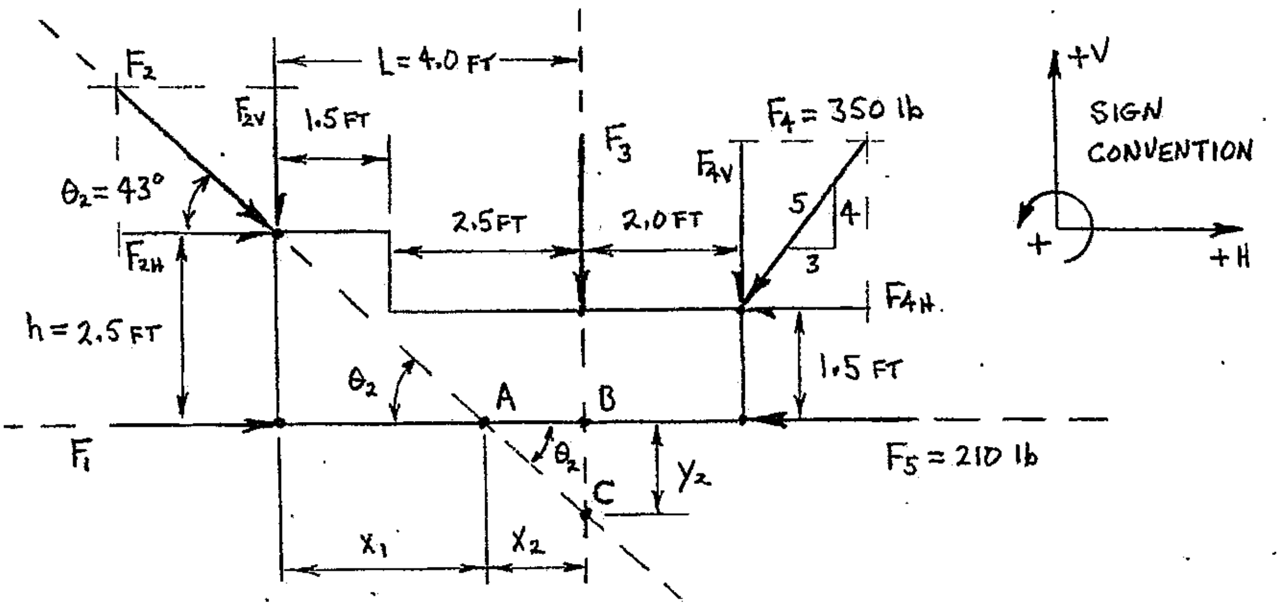

Solving for x_1, x_2 and y_2:

$$\tan\theta_2 = \frac{h}{x_1}$$

$$x_1 = \frac{h}{\tan\theta_2}$$

$$x_1 = \frac{2.5\text{ ft}}{\tan 43^0}$$

$$x_1 = \underline{\underline{2.68092\text{ ft}}}$$

$$x_2 = L - x_1$$

$$x_2 = 4.0\text{ ft} - 2.68092\text{ ft}$$

$$x_2 = \underline{\underline{1.31908\text{ ft}}}$$

$$y_2 = x_2(\tan\theta_2)$$

$$y_2 = (1.31908\text{ ft})(\tan 43^0)$$

$$y_2 = \underline{\underline{1.23006\text{ ft}}}$$

Example 5-1: (cont'd.)

A moment equilibrium equation ($\Sigma M_P = 0$) *could* be developed at <u>ANY</u> point in the plane of the object shown in the working diagram. However, moment equilibrium equations will *only be developed* at each of the three intersection points (A, B, and C) established by extending the unknown forces' lines of action. From the working diagram (previous page),it can be seen that at the intersection of a pair of extended lines of action (points A, B and C) the moment arms of the associated forces are equal to zero (0). If a force has a zero moment arm, it will produce a zero moment; this is the reason why the unknown forces' lines of action were extended and points A, B and C were established at the intersections of those lines of action.

For this example, static equilibrium will first be applied by summing moments about point A. The first two algebraic lines of an equilibrium equation are considered to be the heading; these two lines represent a "coupled pair", which means <u>BOTH</u> lines must be completely shown. The first line describes the type of problem (in this case, static equilibrium of moments with respect to point A). The second line is the expanded heading, and includes all of the possible individual moments about point A.

$$\Sigma M_A = 0$$

$$0 = \pm\left[(F_1)(d_\perp)\right] \pm\left[(F_2)(d_\perp)\right] \pm\left[(F_{3H})(d_\perp)\right] \pm\left[(F_{3V})(d_\perp)\right] \pm\left[(F_{4H})(d_\perp)\right] \pm\left[(F_{4V})(d_\perp)\right]$$
$$\pm\left[(F_5)(d_\perp)\right]$$

Forces F_1, F_2 and F_5 are shown in the expanded heading (rather than their vertical and horizontal components) because each of these forces *has a moment arm equal to zero* with respect to point A. Consequently, their moment arms are "shown as zero" in the expanded heading, and forces F_1, F_2 and F_5 will cause zero moment with respect to point A. The original force (not the force's components) should be shown in the expanded heading whenever its line of action passes through the point about which moments are being summed.

The next lines are used to define all non-zero moment terms. Each individual component is listed, along with its equivalence, moment arm and rotational sense.

<u>Where</u>: $F_{3V} = F_3 \quad @ \quad d_\perp = x_2 \ \circlearrowright$

$$F_{4H} = \frac{3}{5}F_4 \quad @ \quad d_\perp = 1.5\ \text{ft} \ \circlearrowleft$$

$$F_{4V} = \frac{4}{5}F_4 \quad @ \quad d_\perp = x_2 + 2.0\ \text{ft} \ \circlearrowright$$

The next line in the equation is the initial algebraic statement. Mathematical signs (+ or -) are specified for each moment term by referencing the rotational sense determined for each individual moment to the sign convention established in the initial

working diagram (page 5-5). Terms already established as zero (0) need not be shown in the initial algebraic statement.

$$0 = -\left[(F_3)(x_2)\right] + \left[\left(\frac{3}{5}F_4\right)(1.5\ \text{ft})\right] - \left[\left(\frac{4}{5}F_4\right)(x_2 + 2.0\ \text{ft})\right]$$

Notice that the initial algebraic statement contains only ONE unknown (F_3). This will occur whenever a moment equilibrium equation is developed at the intersection point of two unknown force's lines of action (*this is the reason for extending those lines of action*). Since the initial algebraic statement has only one unknown (F_3), algebraic development is done to isolate F_3 on the left side of the equals sign.

$$F_3 = \frac{+\left[\left(\frac{3}{5}F_4\right)(1.5\ \text{ft})\right] - \left[\left(\frac{4}{5}F_4\right)(x_2 + 2.0\ \text{ft})\right]}{x_2}$$

Algebraic development is followed by the initial numeric statement, where numeric values (with appropriate units) are substituted for all known algebraic terms. The initial numeric statement may be followed by numeric development (if necessary).

$$F_3 = \frac{+\left[\left(\frac{3}{5}\right)(350\ \text{lb})(1.5\ \text{ft})\right] - \left[\left(\frac{4}{5}\right)(350\ \text{lb})(1.31908\ \text{ft} + 2.0\ \text{ft})\right]}{1.31908\ \text{ft}}$$

The last two lines in the equation again represent a "coupled pair"; BOTH lines must be shown and BOTH must be complete. The first of these two lines represents the "numeric answer", and is a numeric value, with appropriate units, PRECEDED BY either a + or – sign as developed in the numeric solution. The sign (+ or -) is REQUIRED, since the sign is used to develop the "vector answer" shown on the next (last) line. The vector answer is a numeric value with appropriate units, followed by an arrow (vector symbol) that shows direction and sense. For static equilibrium, the sign (+ or -) from the numeric answer indicates either agreement or disagreement with the corresponding ASSUMED SENSE shown in the initial working diagram. A plus (+) sign in the numeric answer indicates AGREEMENT with the assumed sense (+ indicates that the correct sense is the same as the assumed sense). A minus (-) sign in the numeric answer indicates DISAGREEMENT with the assumed sense (- indicates that the correct sense is OPPOSITE to the assumed sense). Since the numeric value calculated for F_3 in this static equilibrium equation was preceded by a - sign, the correct sense is opposite to the sense assumed for F_3 in the initial working diagram.

$$F_3 = -465.736\ \text{lb}$$

$$F_3 = \underline{\underline{465.736\ \text{lb}\ \uparrow}}$$

Example 5-1: (cont'd.)

<u>REMEMBER</u>:

When applying static equilibrium, the sign (+ or -) in the numeric answer is <u>NOT</u> compared in any way to the sign convention.

The sign (+ or -) in the numeric answer of a static equilibrium equation is compared only to the ASSUMED SENSE of its corresponding force (or component) shown in the initial working diagram. The sign (+ or -) indicates either agreement (+) or disagreement (-) with the assumed sense shown in the initial working diagram.

The complete equation developed when applying static equilibrium by summing moments about point A would be:

$$\Sigma M_A = 0$$

$$0 = \pm\left[(F_1)(\cancelto{0}{d_\perp})\right] \pm \left[(F_2)(\cancelto{0}{d_\perp})\right] \pm \left[(\cancelto{0}{F_{3H}})(d_\perp)\right] \pm \left[(F_{3V})(d_\perp)\right] \pm \left[(F_{4H})(d_\perp)\right] \pm \left[(F_{4V})(d_\perp)\right]$$
$$\pm\left[(F_5)(\cancelto{0}{d_\perp})\right]$$

<u>Where</u>: $F_{3V} = F_3 \quad @ \quad d_\perp = x_2$ ↻

$F_{4H} = \frac{3}{5}F_4 \quad @ \quad d_\perp = 1.5\text{ ft}$ ↺

$F_{4V} = \frac{4}{5}F_4 \quad @ \quad d_\perp = x_2 + 2.0\text{ ft}$ ↻

$$0 = -\left[(F_3)(x_2)\right] + \left[\left(\frac{3}{5}F_4\right)(1.5\text{ ft})\right] - \left[\left(\frac{4}{5}F_4\right)(x_2 = 2.0\text{ ft})\right]$$

$$F_3 = \frac{+\left[\left(\frac{3}{5}F_4\right)(1.5\text{ ft})\right] - \left[\left(\frac{4}{5}F_4\right)(x_2 + 2.0\text{ ft})\right]}{x_2}$$

$$F_3 = \frac{+\left[\left(\frac{3}{5}\right)(350\text{ lb})(1.5\text{ ft})\right] - \left[\left(\frac{4}{5}\right)(350\text{ lb})(1.31908\text{ ft} + 2.0\text{ ft})\right]}{1.31908\text{ ft}}$$

$$F_3 = -465.736\text{ lb}$$

$$F_3 = \underline{\underline{465.736\text{ lb} \ \uparrow}}$$

<u>cont'd.</u>

Example 5-1: (cont'd.)

Static equilibrium will now be applied by summing moments at the two remaining intersection points (B and C) of the unknown forces' lines of action. A moment equilibrium equation will first be developed with respect to point B as shown below. Note that in the expanded heading forces F_1, F_3 and F_5 are shown (rather than their components) since these forces have moment arms (and thus moments) equal to zero with respect to point B. Also note that the *components* of force F_2 are shown since moment arms already exist on the working diagram for each of F_2's components.

$$\Sigma M_B = 0$$

$$0 = \pm\left[(F_1)(\cancelto{0}{d_\perp})\right] \pm \left[(F_{2H})(d_\perp)\right] \pm \left[(F_{2V})(d_\perp)\right] \pm \left[(F_3)(\cancelto{0}{d_\perp})\right] \pm \left[(F_{4H})(d_\perp)\right] \pm \left[(F_{4V})(d_\perp)\right]$$
$$\pm\left[(F_5)(\cancelto{0}{d_\perp})\right]$$

<u>Where</u>: $F_{2H} = F_2 \cos\theta_2 \quad @ \quad d_\perp = 2.5\text{ ft} \circlearrowright$

$F_{2V} = F_2 \sin\theta_2 \quad @ \quad d_\perp = 4.0\text{ ft} \circlearrowleft$

$F_{4H} = \frac{3}{5}F_4 \quad @ \quad d_\perp = 1.5\text{ ft} \circlearrowleft$

$F_{4V} = \frac{4}{5}F_4 \quad @ \quad d_\perp = 2.0\text{ ft} \circlearrowright$

$$0 = -\left[(F_2\cos\theta_2)(2.5\text{ ft})\right] + \left[(F_2\sin\theta_2)(4.0\text{ ft})\right] + \left[\left(\frac{3}{5}F_4\right)(1.5\text{ ft})\right] - \left[\left(\frac{4}{5}F_4\right)(2.0\text{ ft})\right]$$

$$+\left[(F_2\cos\theta_2)(2.5\text{ ft})\right] - \left[(F_2\sin\theta_2)(4.0\text{ ft})\right] = +\left[\left(\frac{3}{5}F_4\right)(1.5\text{ ft})\right] - \left[\left(\frac{4}{5}F_4\right)(2.0\text{ ft})\right]$$

$$F_2\left[+(\cos\theta_2)(2.5\text{ ft}) - (\sin\theta_2)(4.0\text{ ft})\right] = +\left[\left(\frac{3}{5}F_4\right)(1.5\text{ ft})\right] - \left[\left(\frac{4}{5}F_4\right)(2.0\text{ ft})\right]$$

$$F_2 = \frac{+\left[\left(\frac{3}{5}F_4\right)(1.5\text{ ft})\right] - \left[\left(\frac{4}{5}F_4\right)(2.0\text{ ft})\right]}{\left[+(\cos\theta_2)(2.5\text{ ft}) - (\sin\theta_2)(4.0\text{ ft})\right]}$$

$$F_2 = \frac{+\left[\left(\frac{3}{5}\right)(350\text{ lb})(1.5\text{ ft})\right] - \left[\left(\frac{4}{5}\right)(350\text{ lb})(2.0\text{ ft})\right]}{\left[+\left(\cos 43^\circ\right)(2.5\text{ ft}) - \left(\sin 43^\circ\right)(4.0\text{ ft})\right]}$$

$$F_2 = +272.340\text{ lb}$$

$$\underline{\underline{F_2 = 272.340\text{ lb}}}$$

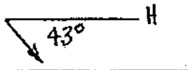

Even though the components of F_2 were included in the initial algebraic statement, the algebraic development isolated <u>force</u> F_2, so the answer is the actual force F_2 and <u>NOT</u> either of its perpendicular components.

Example 5-1: (cont'd.)

A third moment equilibrium equation is now developed with respect to point C as shown below. Note that in the expanded heading forces F_2 and F_3 are shown (rather than their components) since these forces have moment arms (and thus moments) equal to zero with respect to point C.

$$\Sigma M_C = 0$$

$$0 = \pm[(F_{1H})(d_\perp)] \pm [(F_{1V})(d_\perp)]^{0} \pm [(F_2)(d_\perp)]^{0} \pm [(F_3)(d_\perp)]^{0} \pm [(F_{4H})(d_\perp)] \pm [(F_{4V})(d_\perp)]$$
$$\pm [(F_{5H})(d_\perp)] \pm [(F_{5V})(d_\perp)]^{0}$$

<u>Where</u>: $F_{1H} = F_1 \quad @ \quad d_\perp = y_2 \quad \circlearrowright$

$F_{4H} = \frac{3}{5}F_4 \quad @ \quad d_\perp = 1.5\text{ ft} + y_2 \quad \circlearrowleft$

$F_{4V} = \frac{4}{5}F_4 \quad @ \quad d_\perp = 2.0\text{ ft} \quad \circlearrowright$

$F_{5H} = F_5 \quad @ \quad d_\perp = y_2 \quad \circlearrowleft$

$$0 = -[(F_1)(y_2)] + \left[\left(\frac{3}{5}F_4\right)(1.5\text{ ft} + y_2)\right] - \left[\left(\frac{4}{5}F_4\right)(2.0\text{ ft})\right] + [(F_5)(y_2)]$$

$$F_1 = \frac{+\left[\left(\frac{3}{5}F_4\right)(1.5\text{ ft} + y_2)\right] - \left[\left(\frac{4}{5}F_4\right)(2.0\text{ ft})\right] + [(F_5)(y_2)]}{y_2}$$

$$F_1 = \frac{+\left[\left(\frac{3}{5}\right)(350\text{ lb})(1.5\text{ ft} + 1.23006\text{ ft})\right] - \left[\left(\frac{4}{5}\right)(350\text{ lb})(2.0\text{ ft})\right] + [(210\text{ lb})(1.23006\text{ ft})]}{1.23006\text{ ft}}$$

$$F_1 = +220.823\text{ lb}$$

$$F_1 = \underline{\underline{220.823\text{ lb} \quad \rightarrow}}$$

Each of the three moment equilibrium equations developed above generated an INDEPENDENT SOLUTION for one of the original unknown forces (F_1, F_2 and F_3), since only <u>one</u> of the unknowns appeared in each equation. Answers generated using independent solutions can be verified by substituting the answers into any un-used equilibrium equations. The force equilibrium equations ($\Sigma F_X = 0$ and $\Sigma F_Y = 0$) were not used to solve for any of the unknown forces and can now be used to verify the answers found for F_1, F_2 and F_3.

Example 5-1: (cont'd.)

Static equilibrium will now be applied to both of the perpendicular directions to verify the answers for F_1, F_2 and F_3. Each of the force equilibrium equations will be developed using the assumed senses shown in the initial working diagram (page 5-5). <u>HOWEVER</u>, you must remember to *substitute the <u>entire</u> numeric answer* found for each of the unknown forces, INCLUDING THE SIGN (+ or -) generated in the numeric solutions, since the moment equilibrium equations were written based on the ASSUMED SENSES shown in the initial working diagram.

Application of static equilibrium in the horizontal direction will be used to verify the answers developed for force F_1 and F_2, as shown below:

$$\Sigma F_H = 0$$

$$0 = \pm F_{1H} \pm F_{2H} \pm F_{3H} \pm F_{4H} \pm F_{5H}$$

<u>Where</u>: $F_{1H} = F_1 \;\rightarrow$ and: $F_1 = (+220.823\text{ lb})$

$F_{2H} = F_2 \cos\theta_2 \;\rightarrow$ and: $F_2 = (+272.340\text{ lb})$

$F_{4H} = \left(\frac{3}{5}\right) F_4 \;\leftarrow$

$F_{5H} = F_5 \;\leftarrow$

$$0 = +F_1 + F_2 \cos\theta_2 - \left(\frac{3}{5}\right) F_4 - F_5$$

$$0 = +(220.823\text{ lb}) + (+272.340\text{ lb})(\cos 43^0) - \left(\frac{3}{5}\right)(350\text{ lb}) - (210\text{ lb})$$

$$\underline{\underline{0 = 0}}$$

Application of static equilibrium in the vertical direction will be used to verify the answer developed for force F_3, as shown below:

$$\Sigma F_V = 0$$

$$0 = \pm F_{1V} \pm F_{2V} \pm F_{3V} \pm F_{4V} \pm F_{5V}$$

<u>Where</u>: $F_{2V} = F_2 \sin\theta_2 \;\rightarrow$ and: $F_2 = (+272.340\text{ lb})$

$F_{3V} = F_3 \;\downarrow$ and: $F_3 = (-465.736\text{ lb})$

$F_{4V} = \left(\frac{4}{5}\right) F_4 \;\downarrow$

$$0 = -F_2 \sin\theta_2 - F_3 - \left(\frac{4}{5}\right) F_4$$

$$0 = -(+272.340\text{ lb})(\sin 43^0) - (-465.736\text{ lb}) - \left(\frac{4}{5}\right)(350\text{ lb})$$

$$\underline{\underline{0 = 0}}$$

Example 5-1: (cont'd.)

The answers for F_1, F_2 and F_3 have been verified as correct, and are shown below. Verification of answers in coplanar equilibrium problems is typically not required, *but is good standard practice.* However, keep in mind that ANSWERS CAN ONLY BE VERIFIED IF THEY WERE FOUND USING INDEPENDENT SOLUTIONS. Note that the final answer for each of the forces must include magnitude (including proper units), direction and sense.

Answer:

$F_1 = 220.8$ lb →

$F_2 = 272.3$ lb 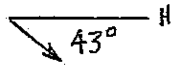

$F_3 = 465.7$ lb ↑

SUMMARY

A coplanar force system occurs whenever the planar forces applied to an object do not all pass through one common point. Static equilibrium of a coplanar force system could be defined as a condition in which the summation of all influences (forces and moments) acting on an object at rest is equal to zero ($\Sigma F = 0$ and $\Sigma M_P = 0$). If the sum of all the forces acting on an object is zero, then the sum of the forces' components in each of two perpendicular directions would also be equal to zero ($\Sigma F_X = 0$ and $\Sigma F_Y = 0$). So, there are typically three equilibrium equations available:

$\Sigma F_X = 0$
$\Sigma F_Y = 0$
$\Sigma M_P = 0$ (where P is any point in the plane of an object)

A specific solution procedure was outlined and demonstrated for solving coplanar static equilibrium problems; this procedure was used to solve all examples in this chapter. You must also use this solution method when solving the Practice Problems shown at the end of this chapter.

Care must be taken when determining the vector answer for a static equilibrium solution. For static equilibrium, the sign (+ or -) returned with the numeric answer is referenced to the assumed sense shown in the initial working diagram; a positive (+) sign indicates agreement with the assumed sense, while a negative sign (-) indicates disagreement with the assumed sense.

Independent solution methods should be used when possible so that answers can be verified. However, remember that <u>ONLY</u> answers found by independent solution methods can be verified.

FURTHER EXAMPLE PROBLEMS (solutions in GFSA format are on the following pages)

Example 5-2 A small bracket is in static equilibrium due to forces applied as shown below. Determine forces F_1, F_3 and F_4.

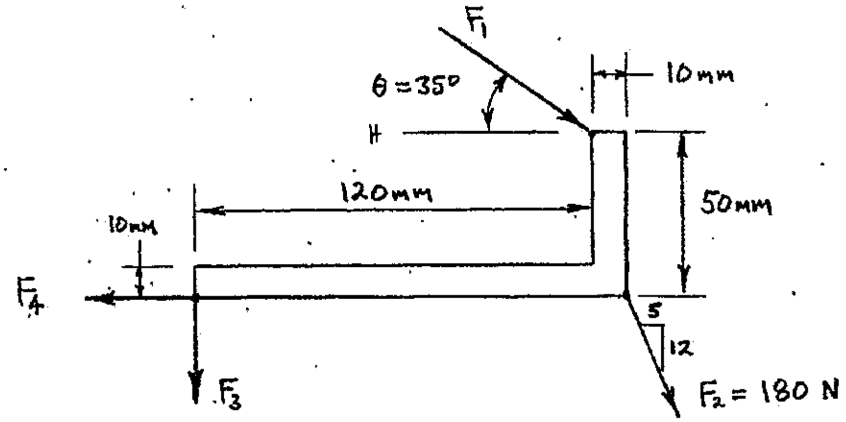

Example 5-3 Forces are applied to a rectangular plate as shown below. Determine the vertical force F_5 (not shown) that must be applied at point A so that the plate will be in static equilibrium.

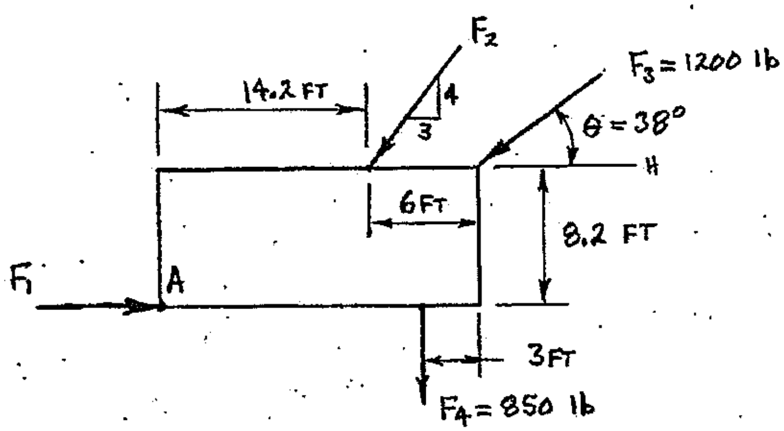

PROBLEM: EXAMPLE 5-2

GIVEN: A SMALL BRACKET IS IN STATIC EQUILIBRIUM DUE TO FORCES APPLIED AS SHOWN BELOW.

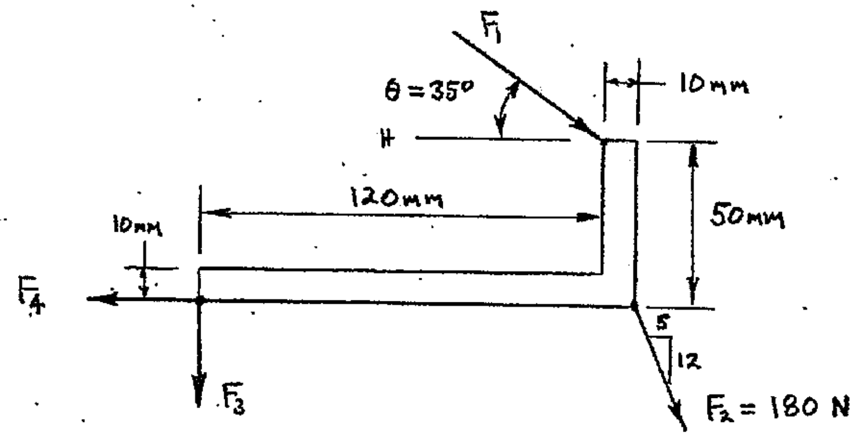

FIND: DETERMINE FORCES F_1, F_3 AND F_4.

SOLUTION:

WORKING DIAGRAM:

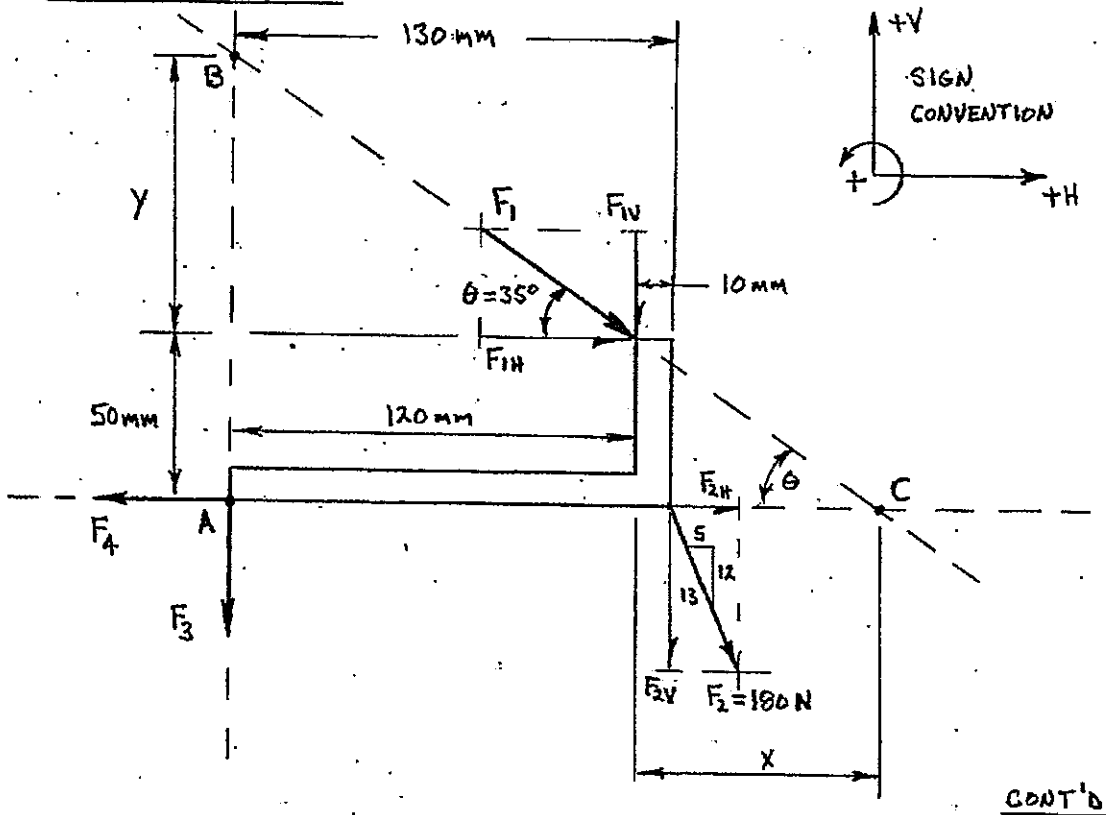

CONT'D.

PROBLEM: EXAMPLE 5-2 (CONT'D.)

DETERMINE DISTANCES X + Y:

$$\tan\theta = \frac{50\text{ mm}}{x} \qquad \tan\theta = \frac{y}{120\text{ mm}}$$

$$X = \frac{50\text{ mm}}{\tan\theta} \qquad y = (\tan\theta)(120\text{ mm})$$

$$X = \frac{50\text{ mm}}{\tan 35°} \qquad y = (\tan 35°)(120\text{ mm})$$

$$y = \underline{\underline{84.0249\text{ mm}}}$$

$$x = \underline{\underline{71.4074\text{ mm}}}$$

APPLYING STATIC EQUILIBRIUM BY SUMMING MOMENTS ABOUT POINT A:

$$\Sigma M_A = 0$$

$$0 = \pm[(F_{1H})(d\perp)] \pm [(F_{1V})(d\perp)] \pm [(F_{2H})(\cancel{d\perp})^{0}] \pm [(F_{2V})(d\perp)] \pm [(F_3)(\cancel{d\perp})^{0}] \pm [(F_4)(\cancel{d\perp})^{0}]$$

WHERE: $F_{1H} = F_1 \cos\theta$ @ $d\perp = 50\text{ mm}$ ↻

$F_{1V} = F_1 \sin\theta$ @ $d\perp = 120\text{ mm}$ ↻

$F_{2V} = \frac{12}{13} F_2$ @ $d\perp = 130\text{ mm}$ ↻

$$0 = -[(F_1\cos\theta)(50\text{mm})] - [(F_1\sin\theta)(120\text{mm})] - [(\tfrac{12}{13}F_2)(130\text{ mm})]$$

$$+[(F_1\cos\theta)(50\text{mm})] + [(F_1\sin\theta)(120\text{mm})] = -[(\tfrac{12}{13}F_2)(130\text{ mm})]$$

$$F_1[+(\cos\theta)(50\text{ mm}) + (\sin\theta)(120\text{ mm})] = -[(\tfrac{12}{13}F_2)(130\text{ mm})]$$

$$F_1 = \frac{-[(\tfrac{12}{13}F_2)(130\text{mm})]}{[+(\cos\theta)(50\text{mm}) + (\sin\theta)(120\text{mm})]}$$

$$F_1 = \frac{-[(\tfrac{12}{13})(180\text{ N})(130\text{ mm})]}{[+(\cos 35°)(50\text{mm}) + (\sin 35°)(120\text{mm})]}$$

$$F_1 = -196.745\text{ N}$$

$$F_1 = \underline{\underline{196.745\text{ N} \quad \nwarrow 35° \text{ H}}}$$

CONT'D.

PROBLEM: EXAMPLE 5-2 (CONT'D.)

APPLYING STATIC EQUILIBRIUM BY SUMMING MOMENTS ABOUT POINT B:

$$\Sigma M_B = 0$$

$$0 = \pm[(F_1)(d\perp)^{0}] \pm [(F_{2H})(d\perp)] \pm [(F_{2V})(d\perp)] \pm [(F_3)(d\perp)^{0}] \pm [(F_{4H})(d\perp)] \pm [(F_{4V})(d\perp)^{0}]$$

WHERE: $F_{2H} = (5/13)F_2$ @ $d\perp = (50mm + y)$ ↺

$F_{2V} = (12/13)F_2$ @ $d\perp = 130mm$ ↻

$F_{4H} = F_4$ @ $d\perp = (50mm + y)$ ↻

$$0 = +[(5/13)(F_2)(50mm + y)] - [(12/13)(F_2)(130mm)] - [(F_4)(50mm + y)]$$

$$F_4 = \frac{+[(5/13)(F_2)(50mm + y)] - [(12/13)(F_2)(130mm)]}{(50mm + y)}$$

$$F_4 = \frac{+[(5/13)(180N)(50mm + 84.0249mm)] - [(12/13)(180N)(130mm)]}{(50mm + 84.0249mm)}$$

$$F_4 = -91.9333\ N$$

$$F_4 = \underline{\underline{91.9333\ N \longrightarrow}}$$

APPLYING STATIC EQUILIBRIUM BY SUMMING MOMENTS ABOUT POINT C:

$$\Sigma M_C = 0$$

$$0 = \pm[(F_1)(d\perp)^{0}] \pm [(F_{2H})(d\perp)^{0}] \pm [(F_{2V})(d\perp)] \pm [(F_{3H})(d\perp)^{0}] \pm [(F_{3V})(d\perp)] \pm [(F_4)(d\perp)^{0}]$$

WHERE: $F_{2V} = (12/13)F_2$ @ $(x - 10mm)$ ↺

$F_{3V} = F_3$ @ $(120mm + x)$ ↺

$$0 = +[(12/13)(F_2)(x - 10mm)] + [(F_3)(120mm + x)]$$

$$F_3 = \frac{-[(12/13)(F_2)(x - 10mm)]}{(120mm + x)}$$

$$F_3 = \frac{-[(12/13)(180N)(71.4074mm - 10mm)]}{(120mm + 71.4074mm)}$$

$$F_3 = -53.3055\ N$$

$$F_3 = \underline{\underline{53.3055N \uparrow}}$$

CONT'D.

PROBLEM: EXAMPLE 5-2 (CONT'D.)

VERIFY ANSWERS BY APPLYING STATIC EQUILIBRIUM IN H AND V DIRECTIONS:

$\Sigma F_H = 0$

$0 = \pm F_{1H} \pm F_{2H} \pm \cancel{F_{3H}} \pm F_{4H}$ ($F_{3H} \rightarrow 0$)

WHERE: $F_{1H} = F_1 \cos\theta \longrightarrow$ AND: $F_1 = (-196.745\ N)$

$F_{2H} = (5/13) F_2 \longrightarrow$

$F_{4H} = F_4 \longleftarrow$ AND: $F_4 = (-91.9333\ N)$

$0 = +(F_1 \cos\theta) + (5/13) F_2 - F_4$

$0 = +(-196.745\ N)(\cos 35°) + (5/13)(180\ N) - (-91.9333\ N)$

$0 = 0$ $F_1 + F_4$ VERIFIED

$\Sigma F_V = 0$

$0 = \pm F_{1V} \pm F_{2V} \pm F_{3V} \pm \cancel{F_{4V}}$ ($F_{4V} \rightarrow 0$)

WHERE: $F_{1V} = F_1 \sin\theta \downarrow$ AND: $F_1 = (-196.745\ N)$

$F_{2V} = (12/13) F_2 \downarrow$

$F_{3V} = F_3 \downarrow$ AND: $F_3 = (-53.3055\ N)$

$0 = -(F_1 \sin\theta) - (12/13) F_2 - F_3$

$0 = -(-196.745\ N)(\sin 35°) - (12/13)(180\ N) - (-53.3055\ N)$

$0 = 0$ F_3 VERIFIED

ANSWER:

$F_1 = 196.7\ N$

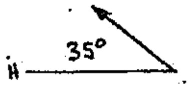

$F_3 = 53.31\ N \uparrow$

$F_4 = 91.93\ N \longrightarrow$

PROBLEM: EXAMPLE 5-3

GIVEN: FORCES ARE APPLIED TO A RECTANGULAR PLATE AS SHOWN BELOW.

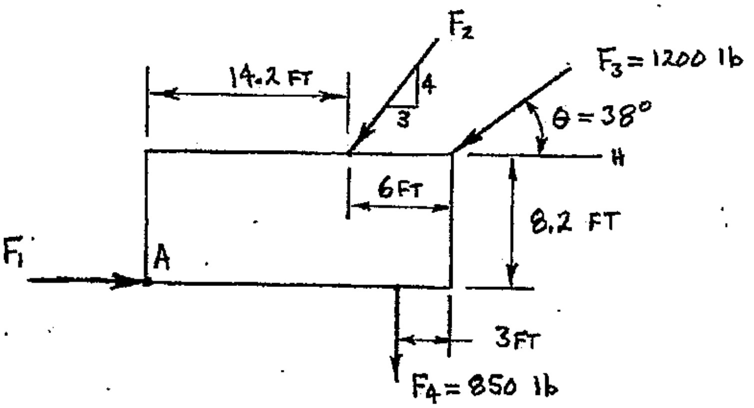

FIND: DETERMINE THE VERTICAL FORCE F_5 (NOT SHOWN) THAT MUST BE APPLIED AT POINT A SO THAT THE PLATE WILL BE IN STATIC EQUILIBRIUM.

SOLUTION:

WORKING DIAGRAM:

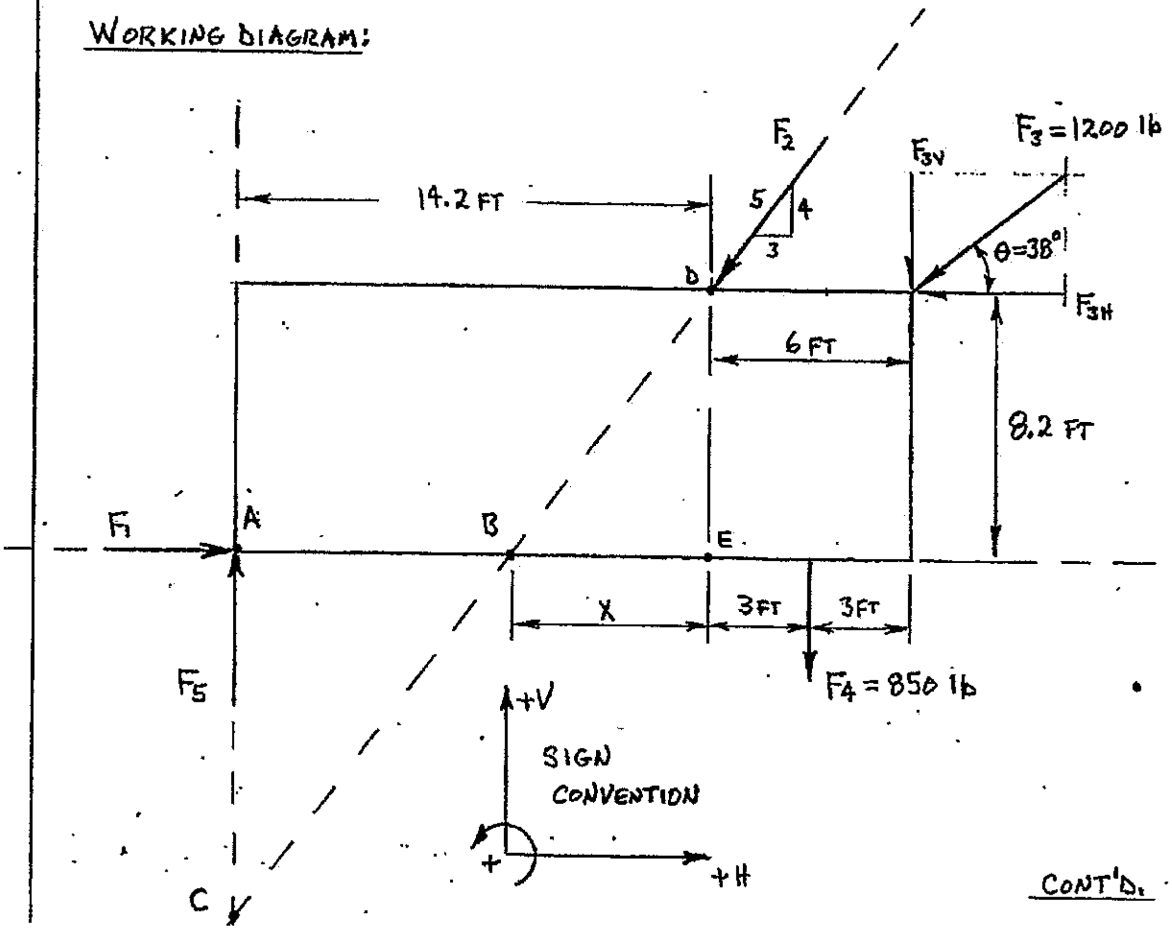

CONT'D.

PROBLEM: EXAMPLE 5-3

DETERMINE LENGTH X USING SIMILAR TRIANGLES: (B-D-E + F_2's SLOPE TRIANGLE)

$$\frac{X}{DE} = \frac{3}{4}$$

$$X = \left(\frac{3}{4}\right) DE$$

$$X = \left(\frac{3}{4}\right)(8.2\ FT)$$

$$X = \underline{6.150\ FT}$$

APPLY STATIC EQUILIBRIUM BY SUMMING MOMENTS ABOUT POINT B:

$$\Sigma M_B = 0$$

$$0 = \pm[(F_1)(d\perp)]^{0} \pm [(F_2)(d\perp)]^{0} \pm [(F_{3H})(d\perp)] \pm [(F_{3V})(d\perp)] \pm [(F_{4H})(d\perp)]^{0} \pm [(F_{4V})(d\perp)] \pm [(F_{5H})(d\perp)]^{0} \pm [(F_{5V})(d\perp)]$$

WHERE:
$F_{3H} = F_3(\cos\theta)$ @ $d\perp = 8.2\ FT$ ↺
$F_{3V} = F_3(\sin\theta)$ @ $d\perp = (6\ FT + X)$ ↻
$F_{4V} = F_4$ @ $d\perp = (3\ FT + X)$ ↻
$F_{5V} = F_5$ @ $d\perp = (14.2\ FT - X)$ ↻

$$0 = +[F_3(\cos\theta)(8.2\ FT)] - [F_3(\sin\theta)(6\ FT + X)] - [(F_4)(3\ FT + X)] - [(F_5)(14.2\ FT - X)]$$

$$F_5 = \frac{+[F_3(\cos\theta)(8.2\ FT)] - [F_3(\sin\theta)(6\ FT + X)] - [(F_4)(3\ FT + X)]}{(14.2\ FT - X)}$$

$$F_5 = \frac{+[(1200\ lb)(\cos 38°)(8.2\ FT)] - [(1200\ lb)(\sin 38°)(6\ FT + 6.15\ FT)] - [(850\ lb)(3\ FT + 6.15\ FT)]}{(14.2\ FT - 6.15\ FT)}$$

$$F_5 = -1117.99\ lb$$

$$F_5 = \underline{1117.99\ lb} \downarrow$$

ANSWER:
$F_5 = 1118\ lb \downarrow$

PRACTICE PROBLEMS

5.1 Forces are applied to a rectangular bar as shown below. Determine the horizontal force F_5 (not shown) that must be applied at point A to maintain static equilibrium of the bar.

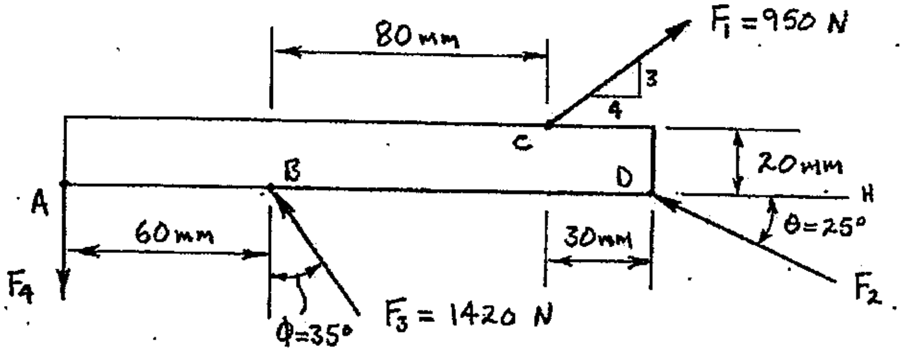

5.2 A rectangular plate is in static equilibrium due to the force system shown below. Determine forces F_1, F_3 and F_4.

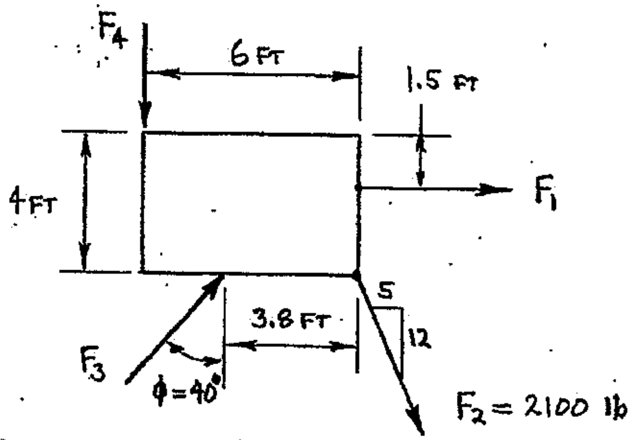

5.3 The object shown below is in static equilibrium due to the five forces applied as shown. Determine forces F_1, F_4 and F_5.

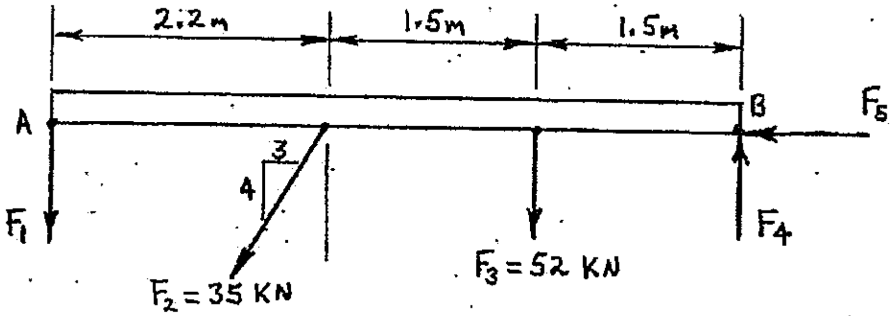

PRACTICE PROBLEMS

5.4 Five forces are applied to a plate as shown below. Determine forces the F_2, F_3 and F_4 that are required to maintain static equilibrium.

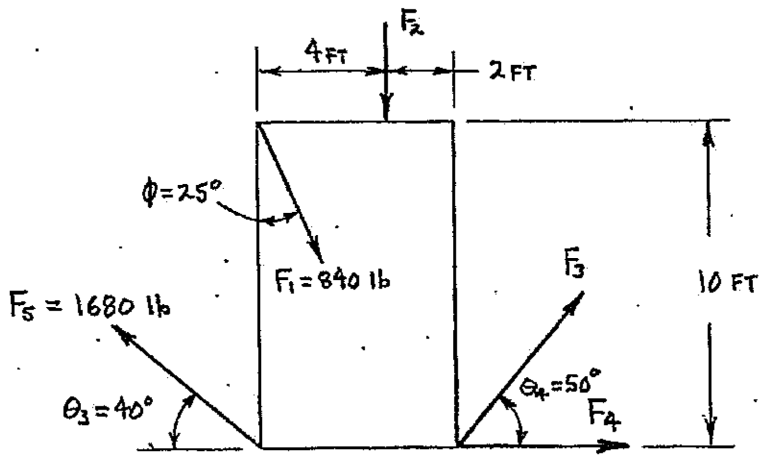

5.5 Five forces are applied to a bracket as shown below. Determine the forces F_1, F_2 and F_3 that are required to maintain static equilibrium of the bracket.

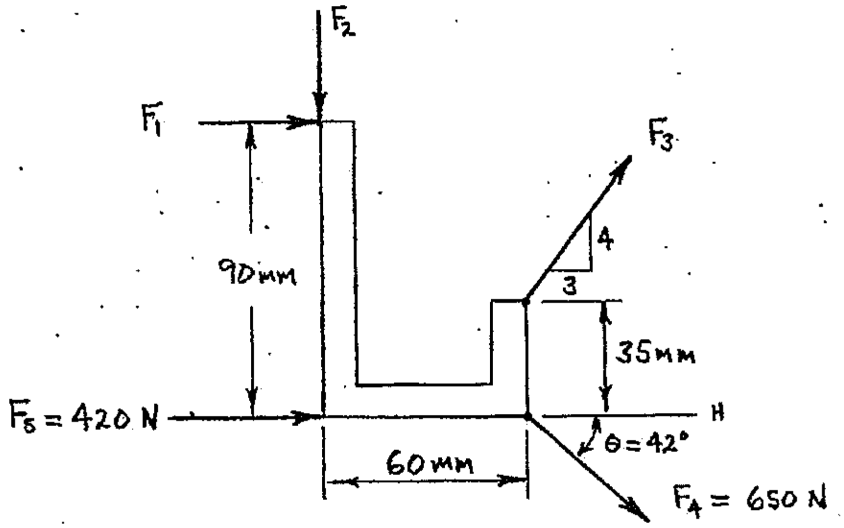

PRACTICE PROBLEMS

5.6 The object shown below must remain in static equilibrium. Determine the vertical force F_4 (not shown) that must be applied at point B so that the object will remain in static equilibrium.

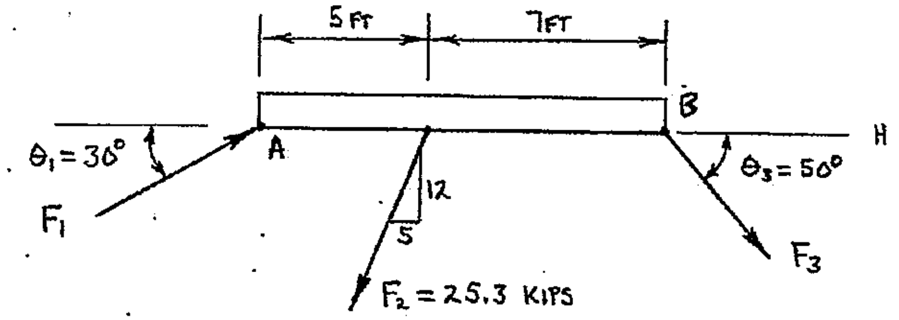

CHAPTER 6: COUPLES

A ***couple*** is a pure rotational tendency produced by two forces. The two forces must have equal magnitude, opposite sense, and parallel but separate lines of action (see Figure 6-1).

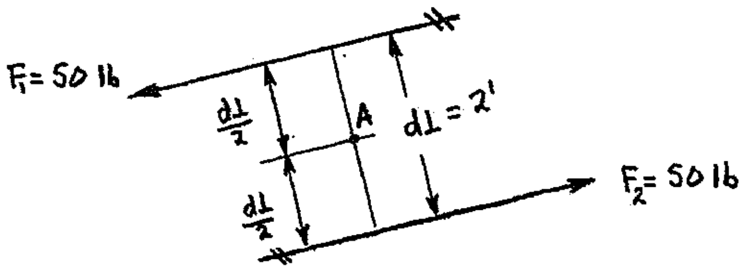

FIGURE 6-1 Diagram of a couple

A couple has the following characteristics:

1. A couple is composed of two forces that have equal magnitudes.
2. The two forces' lines of action are parallel but separate.
3. The two forces have opposite sense.
4. The resultant force of a couple is equal to zero (0), since the two equal but opposite forces would sum to zero in any summation of forces.
5. A couple produces (or tends to produce) pure rotation. This tendency to produce rotation is quantified by the moment of the couple.
6. The magnitude, direction, and sense of a couple's moment are constant. The couple's moment has the same value (same magnitude, direction and sense) for all points in the plane of the couple.
7. A couple produces a moment. The magnitude of the moment produced is equal to the product of <u>one</u> of the forces' magnitudes and the perpendicular distance ($d_{\perp}$) between the two forces' lines of action.
8. The direction of a couple's moment is perpendicular to the plane defined by the two forces that make up the couple, and can be found using the right hand rule (curled fingers of the right hand follow the couple's sense of rotation, the thumb gives direction).
9. The sense of a couple describes the type of rotational tendency produced by the couple. Sense is typically described as clockwise (↻) or counterclockwise (↺).

The items listed above as characteristics of couples can be grouped into three distinct areas. Items 1-3 are used for ***identification*** of a couple. Items 4-6 describe the ***effects*** of a couple. Items 7-9 describe how to ***evaluate*** a couple.

A capital C will be used to identify couples in this manual. Subscripts (i.e. C_A, C_B, C_1, C_2) are used to label multiple couples in the same problem, and may also represent the couple's point of application.

The forces shown in Figure 6-1 (previous page) can clearly be identified as a couple (two forces with equal magnitude, opposite sense, and parallel but separate lines of action). The couple in Figure 6-1 can now be evaluated as shown below:

$$C = \text{moment of couple resulting from forces } F_1 \text{ and } F_2$$

$$C = (\text{magnitude of \underline{one} force})(d_\perp \text{ between the two forces' lines of action})$$

$$C = (F_1)(d_\perp)$$

$$C = (50\,\text{lb})(2\,\text{ft})$$

$$C = \underline{\underline{100\ \text{lb-ft}\ \circlearrowleft}}$$

The counterclockwise sense of the couple C (from Figure 6-1) is shown below in Figure 6-2. Imagine that either force (F_1 or F_2) is connected to point A by a rod that is perpendicular to the line of action of that force. The rod has a solid (glued, welded, etc.) connection to either force, but is allowed to pivot around point A. This arrangement would not allow either force to move linearly along its line of action; instead either force would appear to rotate counterclockwise about point A. Using the right hand rule, the direction of couple C is perpendicular to the plane defined by the two forces (the page containing Figure 6-2) and would point UP from the page.

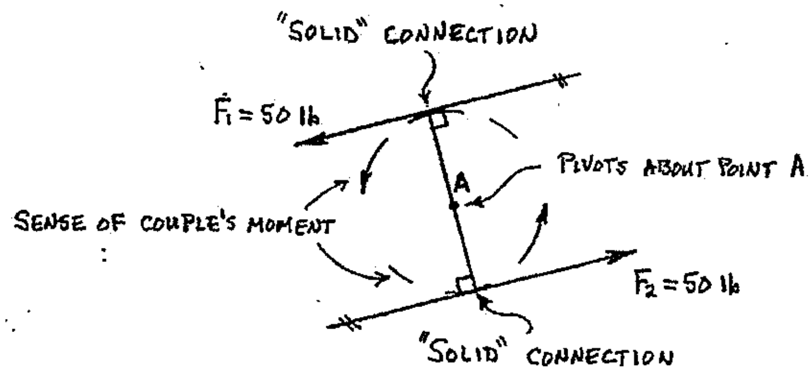

FIGURE 6-2 Sense of couple's moment

A couple's moment is also equal to the sum of the moments produced by the components of the forces that define the couple (this is Varignon's Theorem). Using Varignon's Theorem:

$$\text{couple's moment} = C = \pm(\text{moment due to X-components}) \pm (\text{moment due to Y-components})$$

$$C = \pm\left[(\underline{\text{one}} \text{ of the forces' X-components})(d_\perp \text{ between both X-components' lines of action})\right]$$
$$\pm\left[(\underline{\text{one}} \text{ of the forces' Y-components})(d_\perp \text{ between both Y-components' lines of action})\right]$$

$$C = \pm\left[(F_{1X})(d_\perp)\right] \pm \left[(F_{1Y})(d_\perp)\right]$$

Example 6-1 is used to demonstrate several techniques that can be used to evaluate a couple, and will also be used to prove that the moment of a couple is constant (couple's moment has the same value for all points in the plane of the couple).

Example 6-1: Two forces are applied to an object as shown below. Since the forces can be identified as a couple, calculate the following moments:

1. The moment of the couple, using the magnitude of one force and the perpendicular distance between the forces' lines of action.
2. The moment of the couple using Varignon's Theorem.
3. The moment at point A.
4. The moment at point B.
5. The moment at point C.
6. The moment at point D.

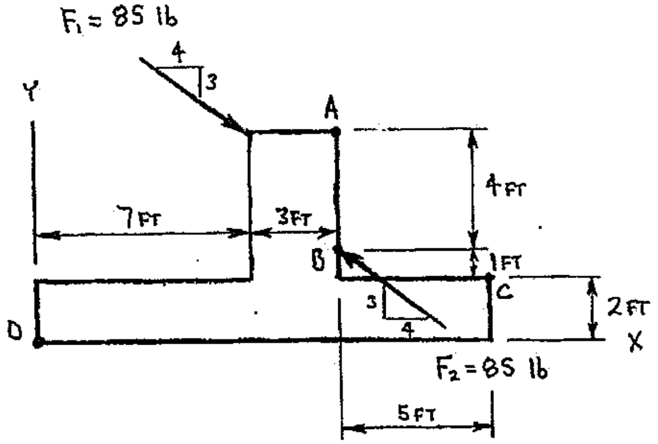

Working diagram: (to be used for entire problem)

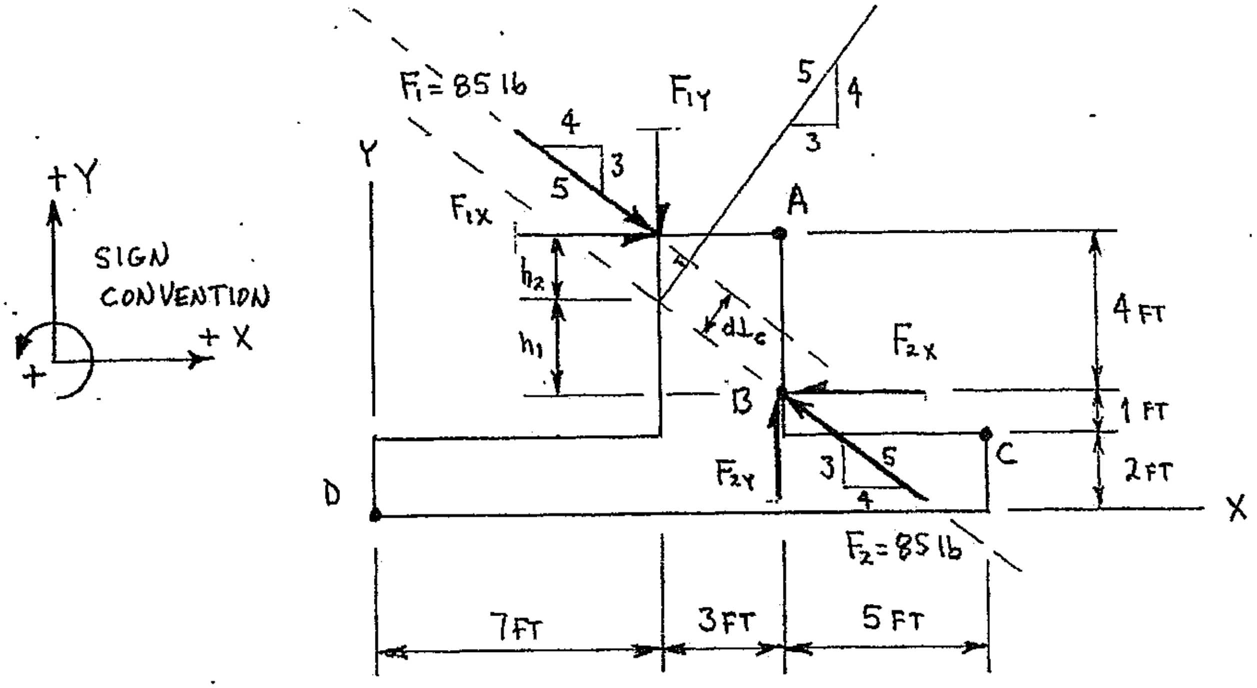

Example 6-1: (cont'd.)

Part 1: Calculate couple's moment using one force and $d_{\perp}$ between lines of action

First, calculate h_1 and h_2:

$$\frac{h_1}{3\,ft} = \frac{3}{4}$$

$$h_1 = \frac{3}{4}(3\,ft)$$

$$h_1 = \underline{\underline{2.25\ ft}}$$

$$h_2 = 4\,ft - h_1$$

$$h_2 = 4\,ft - 2.25\,ft$$

$$h_2 = \underline{\underline{1.75\,ft}}$$

Now calculate $d_{\perp c}$:

$$\frac{d_{\perp c}}{h_2} = \frac{4}{5}$$

$$d_{\perp c} = \frac{4}{5}(h_2)$$

$$d_{\perp c} = \frac{4}{5}(1.75\,ft)$$

$$d_{\perp c} = \underline{\underline{1.4\ ft}}$$

Calculate the couple's moment, C:

$$C = (F_1)(d_{\perp c})$$

$$C = (F_1)(1.4\ ft) \quad \text{.................... Equation 1}$$

$$C = (85\ lb)(1.4\ ft)$$

$$C = \underline{\underline{119\ lb\text{-}ft\ \circlearrowright}}$$

cont'd.

Example 6-1: (cont'd.)

Part 2: Calculate the couple's moment using Varignon's Theorem

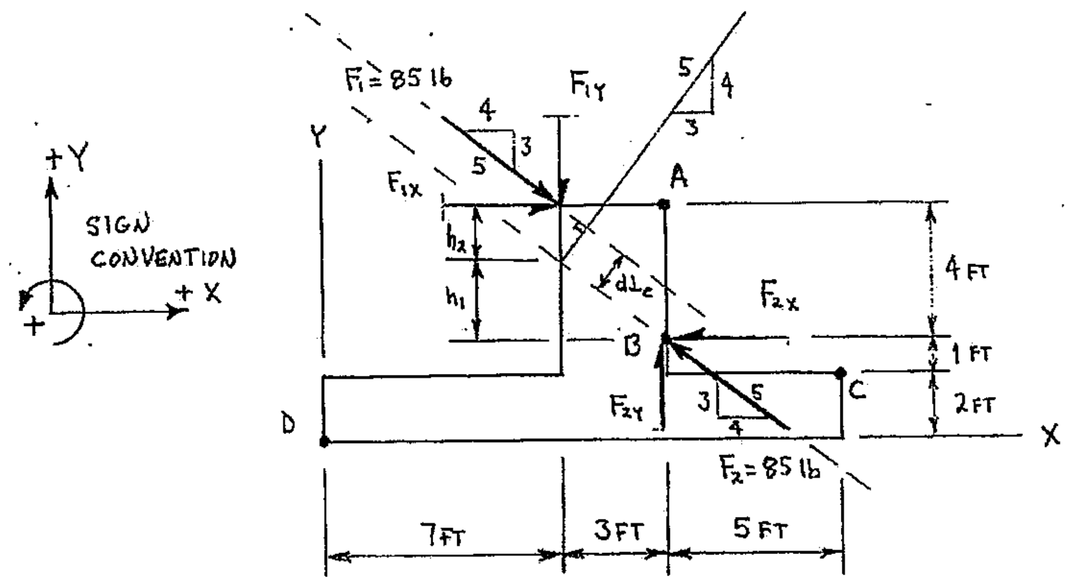

$C = \pm(\text{couple due to X-components}) \pm (\text{couple due to Y-components})$

$C = \pm[(F_{1X})(d_\perp)] \pm [(F_{1Y})(d_\perp)]$

Where: $F_{1X} = \left(\frac{4}{5}\right)F_1$ @ $d_\perp = 4\text{ ft}$ ↻

$F_{1Y} = \left(\frac{3}{5}\right)F_1$ @ $d_\perp = 3\text{ ft}$ ↺

$C = -\left[\left(\frac{4}{5}\right)(F_1)(4\text{ ft})\right] + \left[\left(\frac{3}{5}\right)(F_1)(3\text{ ft})\right]$

$C = (F_1)\left[+\left(\frac{3}{5}\right)(3\text{ ft}) - \left(\frac{4}{5}\right)(4\text{ ft})\right]$

$C = (F_1)(-1.4\text{ ft})$

$C = -(F_1)(1.4\text{ ft})$ — same as Equation 1, page 6-4

$C = -(85\text{ lb})(1.4\text{ ft})$

$C = -119\text{ lb-ft}$ (negative sign indicates clockwise sense)

$C = 119\text{ lb-ft}$ ↻ (identical to answer from Part 1)

cont'd.

Example 6-1: (cont'd.)

Part 3: Calculate the moment about point A (F_{1X} and F_{2Y} have $d_\perp = 0$ about point A)

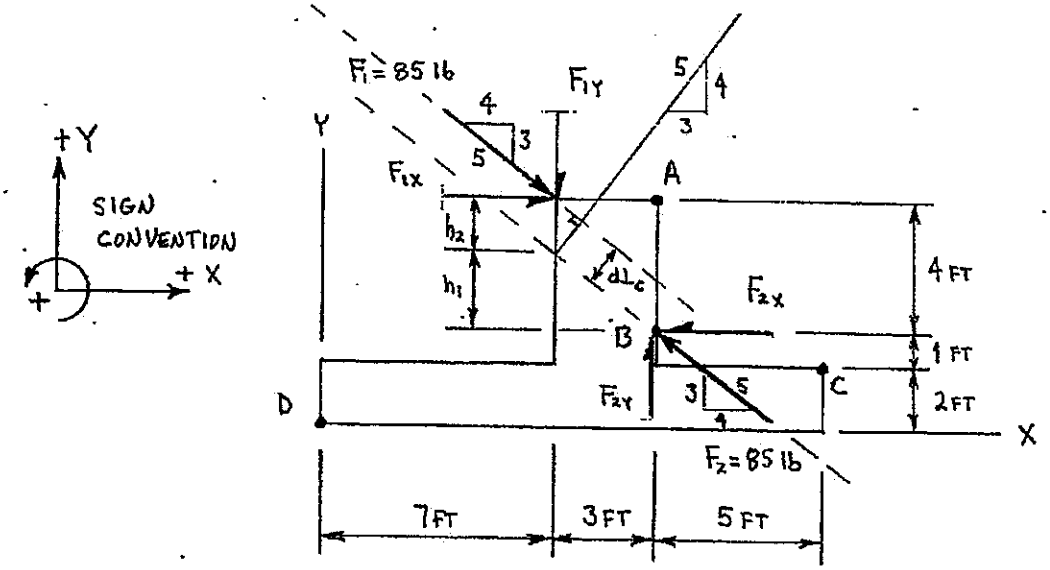

$$M_A = \Sigma M_{iA}$$

$$M_A = \pm[(F_{1X})(d_\perp)^{\nearrow 0}] \pm [(F_{1Y})(d_\perp)] \pm [(F_{2X})(d_\perp)] \pm [(F_{2Y})(d_\perp)^{\nearrow 0}]$$

Where: $F_{1Y} = \left(\frac{3}{5}\right)F_1$ @ $d_\perp = 3\text{ ft}$ ↺

$F_{2X} = \left(\frac{4}{5}\right)F_2$ @ $d_\perp = 4\text{ ft}$ ↻

$$M_A = +\left[\left(\frac{3}{5}\right)(F_1)(3\text{ ft})\right] - \left[\left(\frac{4}{5}\right)(F_2)(4\text{ ft})\right]$$ and: $F_1 = F_2$

$$M_A = +\left[\left(\frac{3}{5}\right)(F_1)(3\text{ ft})\right] - \left[\left(\frac{4}{5}\right)(F_1)(4\text{ ft})\right]$$

$$M_A = (F_1)\left[+\left(\frac{3}{5}\right)(3\text{ ft}) - \left(\frac{4}{5}\right)(4\text{ ft})\right]$$

$$M_A = (F_1)(-1.4\text{ ft})$$

$$M_A = -(F_1)(1.4\text{ ft})$$ ——— same as Equation 1, page 6-4

$$M_A = -(85\text{ lb})(1.4\text{ ft})$$

$M_A = -119$ lb-ft (negative sign indicates clockwise sense)

$M_A = \underline{\underline{119\text{ lb-ft}}}$ ↻ (identical to answers from Parts 1 and 2)

cont'd.

Example 6-1: (cont'd.)

Part 4: Calculate the moment about point B (F_2 has $d_\perp = 0$ about point B)

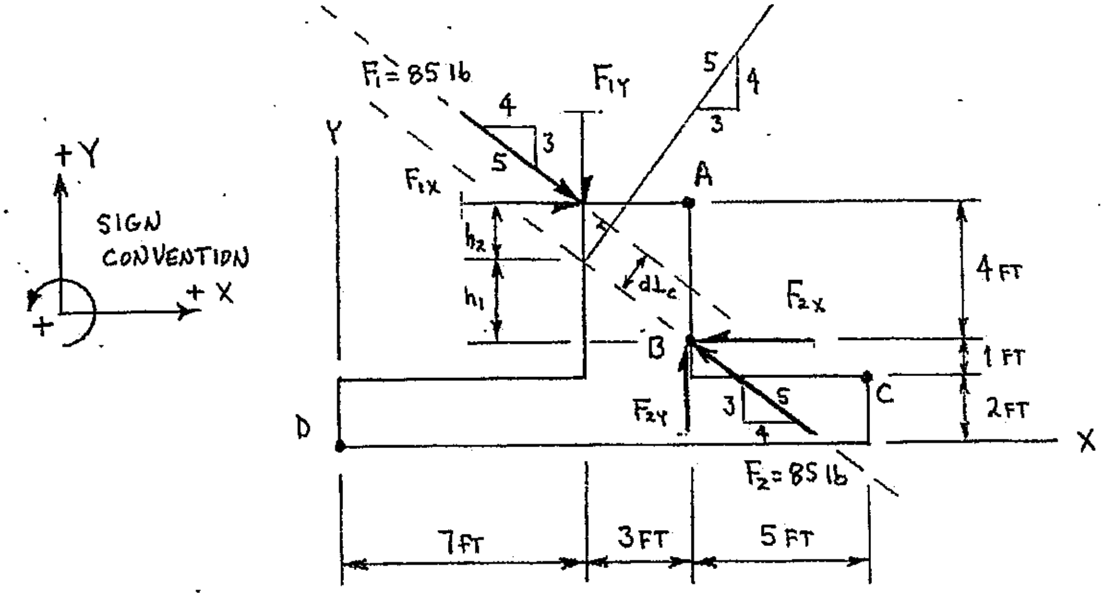

$$M_B = \Sigma M_{iB}$$

$$M_B = \pm[(F_{1X})(d_\perp)] \pm [(F_{1Y})(d_\perp)] \pm [(F_2)(d_\perp)]$$ (with $d_\perp$ of F_2 struck out as 0)

Where: $F_{1X} = \left(\frac{4}{5}\right)F_1$ @ $d_\perp = 4$ ft ↻

$F_{1Y} = \left(\frac{3}{5}\right)F_1$ @ $d_\perp = 3$ ft ↺

$$M_B = -\left[\left(\frac{4}{5}\right)(F_1)(4\text{ ft})\right] + \left[\left(\frac{3}{5}\right)(F_1)(3\text{ ft})\right]$$

$$M_B = (F_1)\left[+\left(\frac{3}{5}\right)(3\text{ ft}) - \left(\frac{4}{5}\right)(4\text{ ft})\right]$$

$$M_B = (F_1)(-1.4\text{ ft})$$

$$M_B = -(F_1)(1.4\text{ ft})$$

$(F_1)(1.4\text{ ft})$ — same as Equation 1, page 6-4

$$M_B = -(85\text{ lb})(1.4\text{ ft})$$

$M_B = -119$ lb-ft (negative sign indicates clockwise sense)

$M_B = $ <u>119 lb-ft ↻</u> (identical to answers from Parts 1, 2 and 3)

cont'd.

Example 6-1: (cont'd.)

Part 5: Calculate the moment at point C

$$M_C = \Sigma M_{iC}$$

$$M_C = \pm[(F_{1X})(d_\perp)] \pm [(F_{1Y})(d_\perp)] \pm [(F_{2X})(d_\perp)] \pm [(F_{2Y})(d_\perp)]$$

Where: $F_{1X} = \left(\frac{4}{5}\right)F_1$ @ $d_\perp = 5\text{ ft}$ ↻

$F_{1Y} = \left(\frac{3}{5}\right)F_1$ @ $d_\perp = 8\text{ ft}$ ↺

$F_{2X} = \left(\frac{4}{5}\right)F_2$ @ $d_\perp = 1\text{ ft}$ ↺

$F_{2Y} = \left(\frac{3}{5}\right)F_2$ @ $d_\perp = 5\text{ ft}$ ↻

$$M_C = -\left[\left(\frac{4}{5}\right)(F_1)(5\text{ ft})\right] + \left[\left(\frac{3}{5}\right)(F_1)(8\text{ ft})\right] + \left[\left(\frac{4}{5}\right)(F_2)(1\text{ ft})\right] - \left[\left(\frac{3}{5}\right)(F_2)(5\text{ ft})\right]$$

and: $F_1 = F_2$

$$M_C = -\left[\left(\frac{4}{5}\right)(F_1)(5\text{ ft})\right] + \left[\left(\frac{3}{5}\right)(F_1)(8\text{ ft})\right] + \left[\left(\frac{4}{5}\right)(F_1)(1\text{ ft})\right] - \left[\left(\frac{3}{5}\right)(F_1)(5\text{ ft})\right]$$

$$M_C = (F_1)\left[-\left(\frac{4}{5}\right)(5\text{ ft}) + \left(\frac{3}{5}\right)(8\text{ ft}) + \left(\frac{4}{5}\right)(1\text{ ft}) - \left(\frac{3}{5}\right)(5\text{ ft})\right]$$

$$M_C = (F_1)(-1.4\text{ ft})$$

$$M_C = -\underbrace{(F_1)(1.4\text{ ft})}$$ ——— same as Equation 1, page 6-4

$$M_C = -(85\text{ lb})(1.4\text{ ft})$$

$M_C = -119\text{ lb-ft}$ (negative sign indicates clockwise sense)

$M_C = \underline{119\text{ lb-ft}}$ ↻ (identical to answers from Parts 1, 2, 3 and 4)

cont'd.

Example 6-1: cont'd.

Part 6: Calculate the moment at point D

$$M_D = \Sigma M_{iD}$$

$$M_D = \pm\left[(F_{1X})(d_\perp)\right] \pm \left[(F_{1Y})(d_\perp)\right] \pm \left[(F_{2X})(d_\perp)\right] \pm \left[(F_{2Y})(d_\perp)\right]$$

Where: $F_{1X} = \left(\frac{4}{5}\right)F_1 \quad @ \quad d_\perp = 7\text{ ft} \circlearrowright$

$F_{1Y} = \left(\frac{3}{5}\right)F_1 \quad @ \quad d_\perp = 7\text{ ft} \circlearrowright$

$F_{2X} = \left(\frac{4}{5}\right)F_2 \quad @ \quad d_\perp = 3\text{ ft} \circlearrowleft$

$F_{2Y} = \left(\frac{3}{5}\right)F_2 \quad @ \quad d_\perp = 10\text{ ft} \circlearrowleft$

$$M_D = -\left[\left(\frac{4}{5}\right)(F_1)(7\text{ ft})\right] - \left[\left(\frac{3}{5}\right)(F_1)(7\text{ ft})\right] + \left[\left(\frac{4}{5}\right)(F_2)(3\text{ ft})\right] + \left[\left(\frac{3}{5}\right)(F_2)(10\text{ ft})\right]$$

and: $F_1 = F_2$

$$M_D = -\left[\left(\frac{4}{5}\right)(F_1)(7\text{ ft})\right] - \left[\left(\frac{3}{5}\right)(F_1)(7\text{ ft})\right] + \left[\left(\frac{4}{5}\right)(F_1)(3\text{ ft})\right] + \left[\left(\frac{3}{5}\right)(F_1)(10\text{ ft})\right]$$

$$M_D = (F_1)\left[-\left(\frac{4}{5}\right)(7\text{ ft}) - \left(\frac{3}{5}\right)(7\text{ ft}) + \left(\frac{4}{5}\right)(3\text{ ft}) + \left(\frac{3}{5}\right)(10\text{ ft})\right]$$

$$M_D = (F_1)(-1.4\text{ ft})$$

$$M_D = -\underbrace{(F_1)(1.4\text{ ft})}$$

same as Equation 1, page 6-4

$$M_D = -(85\text{ lb})(1.4\text{ ft})$$

$M_D = -119\text{ lb-ft}$ (negative sign indicates clockwise sense)

$M_D = \underline{\underline{119\text{ lb-ft} \circlearrowright}}$ (identical to answers from Parts 1, 2, 3, 4 and 5)

C (using couple's definition) = C (using Varignon's Theorem) = $M_A = M_B = M_C = M_D$

So: The moment of a couple has the same value for all points in the plane of the couple! If the moment at point D was the only thing required, the couple's moment (C) could have been found and then "reported" at point D.

The answer to Example 6-1 could be reported as follows:

Answer:
$C = M_A = M_B = M_C = M_D = 119\text{ lb-ft} \circlearrowright$

Representations of Couples on Diagrams

Three different representations of couples are common on given (GIVEN:) diagrams and working diagrams (WORKING DIAGRAM:). Couples can be shown by their definition (two equal but opposite forces with parallel and separate lines of action) as seen in Figure 6-3A. Couples are also shown using a "rotational arrow", typically with respect to (about) a specific point of application (Figure 6-3B). A third representation of a couple is shown in Figure 6-3C, where two equal but opposite forces are "connected" by a perpendicular line which typically has the couple's point of application at its center (this is probably the least common way that couples are shown).

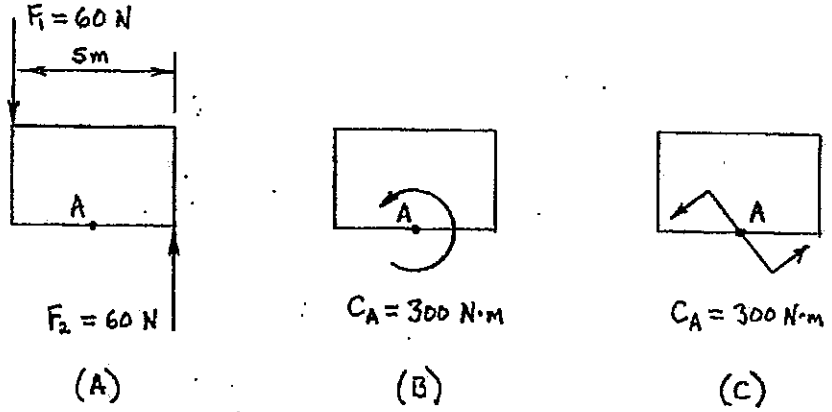

FIGURE 6-3 (A-C) Three different ways to show a couple on a diagram

Total Moment Produced by a Force-Couple System

A *force-couple system* is the result of applying any number of forces and couples simultaneously (as shown in Figure 6-4). When determining the total moment that a force-couple system produces with respect to a specific point, it is important to remember that a couple's moment has the same value (magnitude, direction and sense) for any point in the plane of the couple. Couples typically have a specific point of application, but their value can be summed at any other point in the plane of the couple, as shown in Example 6-2 (following page).

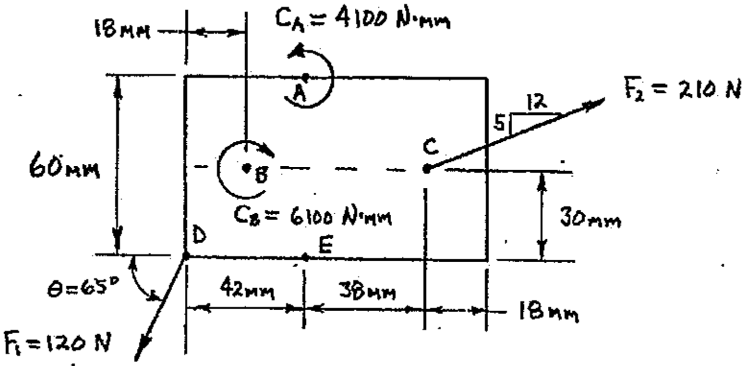

FIGURE 6-4 A force-couple system applied to a rectangular plate

Example 6-2: A force-couple system is applied to a rectangular plate as shown below. Determine the total moment that the force-couple system produces with respect to point E.

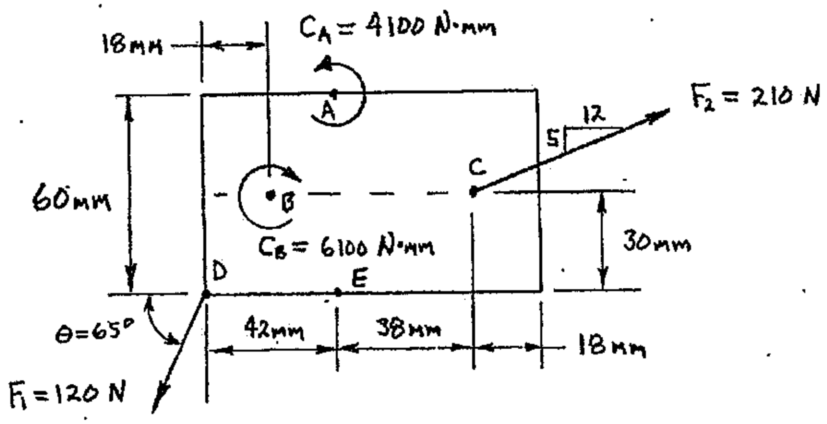

WORKING DIAGRAM:

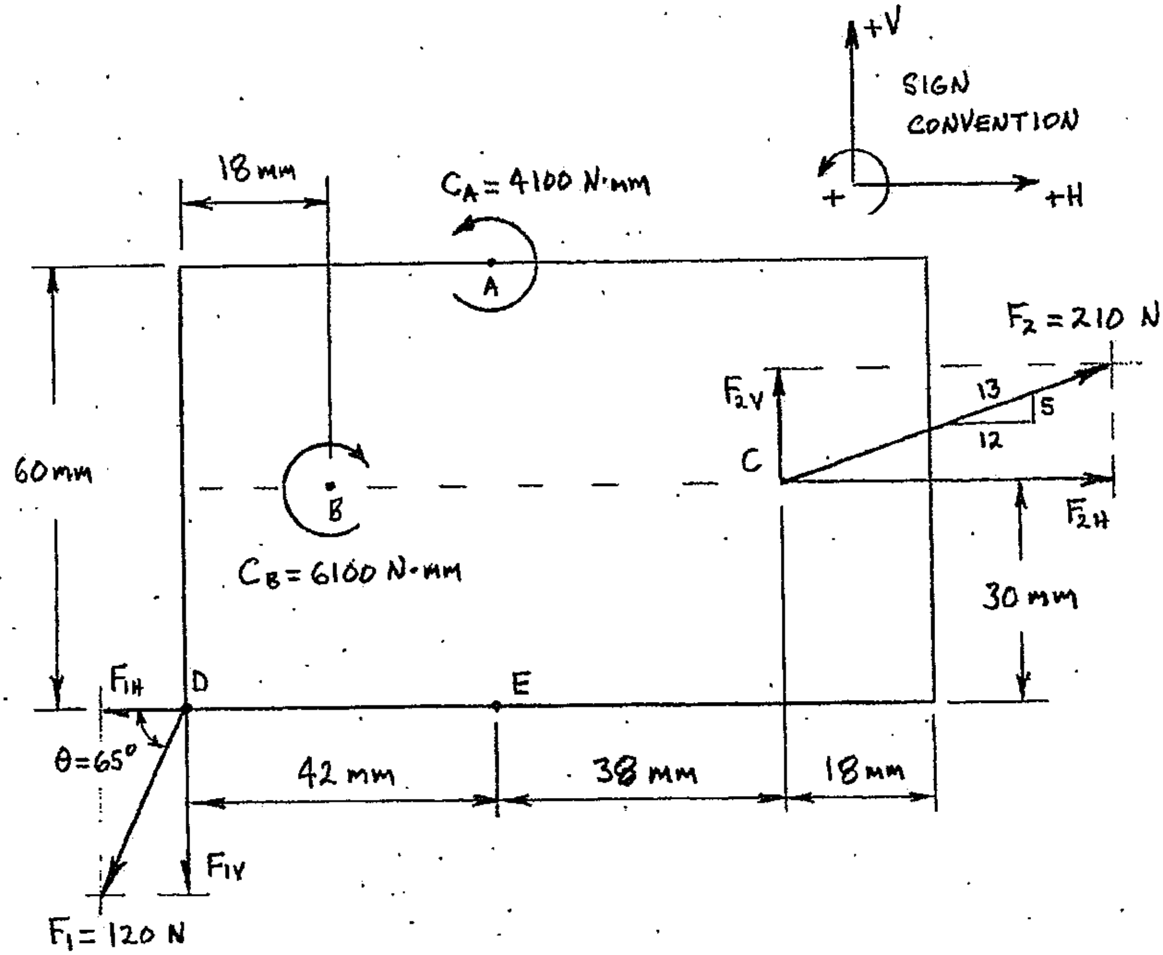

cont'd.

Example 6-2: (cont'd.)

Summation of moments with respect to point E:

$$M_E = \Sigma M_{iE}$$

$$M_E = \pm[(F_{1H})(d_\perp)] \pm [(F_{1V})(d_\perp)] \pm [(F_{2H})(d_\perp)] \pm [(F_{2V})(d_\perp)] \pm C_A \pm C_B$$

(the $d_\perp$ in the first term is struck out and marked 0)

Where: $F_{1V} = F_1 \sin\theta$ @ $d_\perp = 42\text{ mm}$ ↺

$F_{2H} = \left(\frac{12}{13}\right)F_2$ @ $d_\perp = 30\text{ mm}$ ↻

$F_{2V} = \left(\frac{5}{13}\right)F_2$ @ $d_\perp = 38\text{ mm}$ ↺

$$M_E = +[(F_1 \sin\theta)(42\text{ mm})] - \left[\left(\frac{12}{13}\right)(F_2)(30\text{ mm})\right] + \left[\left(\frac{5}{13}\right)(F_2)(38\text{ mm})\right] + C_A - C_B$$

$$M_E = +[(120\text{ N})(\sin 65^0)(42\text{ mm})] - \left[\left(\frac{12}{13}\right)(210\text{ N})(30\text{ mm})\right] + \left[\left(\frac{5}{13}\right)(210\text{ N})(38\text{ mm})\right]$$
$$+ 4100\text{ N-mm} - 6100\text{ N-mm}$$

$$M_E = +4567.79\text{ N-mm} - 5815.38\text{ N-mm} + 3069.23\text{ N-mm} + 4100\text{ N-mm} - 6100\text{ N-mm}$$

$$M_E = -178.360\text{ N-mm}$$

$$M_E = \underline{\underline{178.36\text{ N-mm}}} \circlearrowright$$

> Answer:
>
> $M_E = 178.4$ N-mm ↻

STATIC EQUILIBRIUM OF COPLANAR FORCE-COUPLE SYSTEMS

Static equilibrium can be applied to coplanar force-couple systems to solve for unknown forces and/or an unknown couple. The general equilibrium statements for coplanar force-couple systems are the same as those for coplanar force systems:

$\Sigma F_X = 0$

$\Sigma F_Y = 0$ (where Y is a direction perpendicular to X)

$\Sigma M_P = 0$ (subscript P is any point in the plane of the force-couple system)

The solution procedure used when applying static equilibrium to a coplanar force-couple system is very similar to the procedure developed in Chapter 5 for coplanar force systems. The solution procedure is outlined below, with changes and additions shown in bold-face type.

Procedure:

a) Construct an initial working diagram. Assume a sense for any unknown forces **and unknown couples** (if none was given). Do not show the perpendicular components of any known or unknown forces at this time. Establish a sign convention.
b) Extend the lines of action for each of the UNKNOWN forces (extend the lines outward from both the arrowhead and the tail of the force vector). Do NOT extend the lines of action for any known forces.
c) Locate and label (if not already labeled) all intersections of the extended lines of action. Label the intersection points with letters.
d) Develop an equilibrium equation by summing moments at one of the intersection points of the extended lines of action. **Make sure to include ALL couples in each moment equilibrium equation, regardless of the original point of application of each couple.** Inspect the equation, and if it contains only one unknown (force or couple), then that unknown can be found.
e) Return to the working diagram and add perpendicular components for any forces (known or unknown) that are required for the solution of the moment equation developed in the preceding step (item d), and then solve the equation.
f) CONTINUE TO DEVELOP (AND SOLVE) MOMENT EQUILIBRIUM EQUATIONS FOR EACH AND EVERY POINT LOCATED WHERE THE UNKNOWN FORCES' LINES OF ACTION INTERSECT (repeat items d and e for every intersection point).
g) If there are still unknown forces after developing (and solving) moment equilibrium equations at all of the intersection points, then develop (and solve) a force equilibrium equation in one (or both) of the two perpendicular directions.
h) Any equilibrium equations not used to solve for unknown forces or couples can now be used to check your solution, provided the solution values (forces and/or couples) were developed from independent equations (equations that did not require force or couple values solved for in previous equations).
i) Report your answers completely (magnitude, direction and sense).

The procedure outlined above is followed in Example 6-3 (following page) and all other coplanar static equilibrium examples shown in this chapter. All practice problems that involve coplanar static equilibrium must be solved following this procedure.

Example 6-3 A bracket is in static equilibrium due to the forces and couples applied as shown below. Determine F_3, F_4 and C_A.

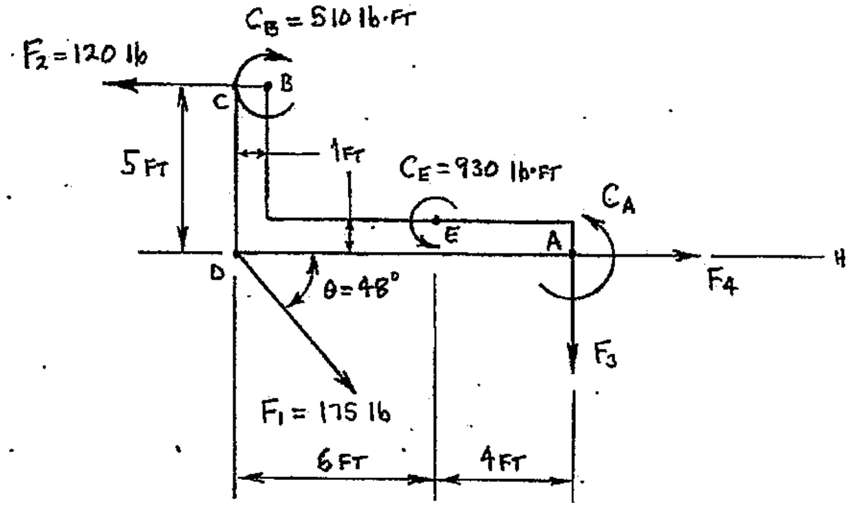

A working diagram is constructed as shown below. Lines of action are extended for the two unknown forces (F_4 and F_5), and the extended lines of action intersect at point A. It is very important to note that the senses shown for F_4, F_5 and C_A, on both the given and working diagrams, are <u>ASSUMPTIONS</u>; their true senses will be determined from the equilibrium solutions.

<u>WORKING DIAGRAM</u>:

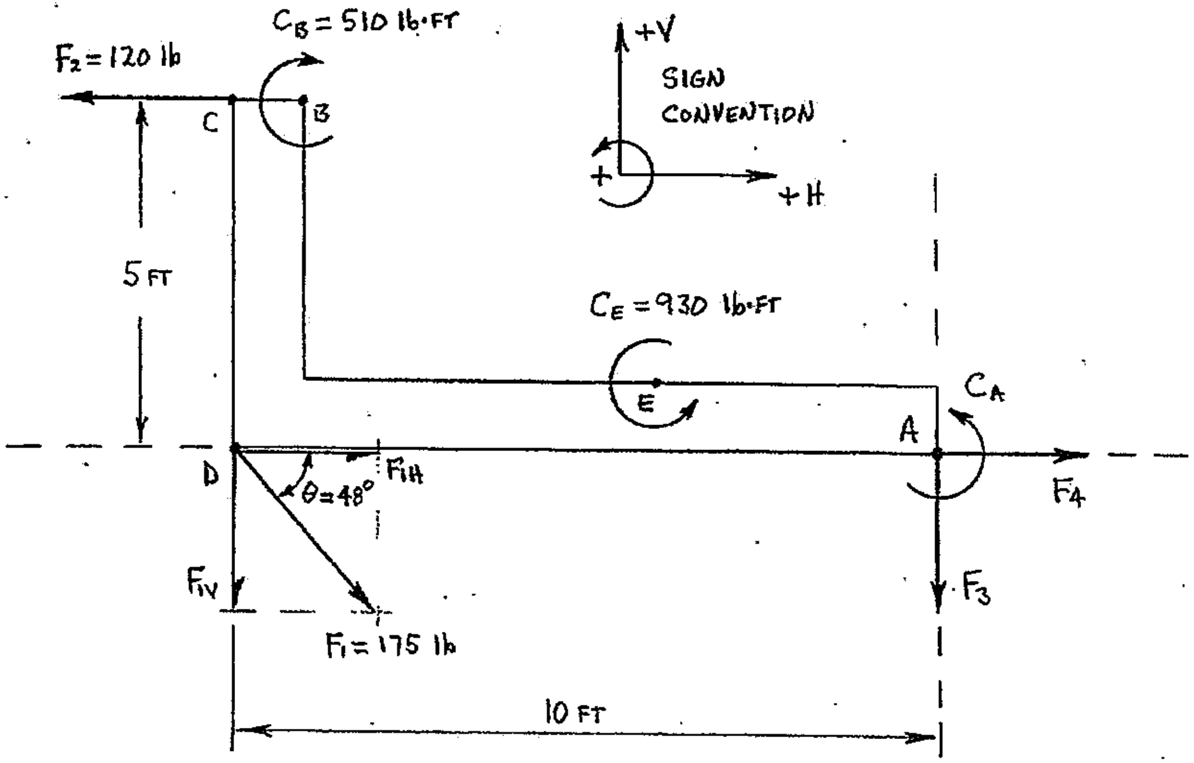

Example 6-3: (cont'd.)

Applying static equilibrium by summing moments with respect to point A:

$$\Sigma M_A = 0$$

$$0 = \pm[(F_{1H})(\not{d}_\perp)^{0}] \pm [(F_{1V})(d_\perp)] \pm [(F_{2H})(d_\perp)] \pm [(F_{2V})(d_\perp)] \pm [(F_3)(\not{d}_\perp)^{0}] \pm [(F_4)(\not{d}_\perp)^{0}]$$

$$\pm C_A \pm C_B \pm C_E$$

$$\underline{\text{Where}}: \quad F_{1V} = F_1 \sin\theta \quad @ \quad d_\perp = 10 \text{ ft} \circlearrowleft$$

$$F_{2H} = F_2 \quad @ \quad d_\perp = 5 \text{ ft} \circlearrowleft$$

$$0 = +[(F_1 \sin\theta)(10 \text{ ft})] + [(F_2)(5 \text{ ft})] + C_A - C_B + C_E$$

$$C_A = -[(F_1 \sin\theta)(10 \text{ ft})] - [(F_2)(5 \text{ ft})] + C_B - C_E$$

$$C_A = -[(175 \text{ lb})(\sin 48^0)(10 \text{ ft})] - [(120 \text{ lb})(5 \text{ ft})] + 510 \text{ lb-ft} - 930 \text{ lb-ft}$$

$$C_A = -1300.50 \text{ lb-ft} - 600 \text{ lb-ft} + 510 \text{ lb-ft} - 930 \text{ lb-ft}$$

$$C_A = -2320.50 \text{ lb-ft}$$ (negative sign indicates disagreement with assumed sense)

$$C_A = \underline{\underline{2320.50 \text{ lb-ft} \circlearrowright}}$$

Applying static equilibrium by summing forces in the horizontal direction:

$$\Sigma F_H = 0$$

$$0 = \pm F_{1H} \pm F_{2H} \pm F_{3H} \pm F_{4H}$$

$$\underline{\text{Where}}: \quad F_{1H} = F_1 \cos\theta \quad \rightarrow$$

$$F_{2H} = F_2 \quad \leftarrow$$

$$F_{4H} = F_4 \quad \rightarrow$$

$$0 = +F_1 \cos\theta - F_2 + F_4$$

$$F_4 = -F_1 \cos\theta + F_2$$

$$F_4 = -(175 \text{ lb})(\cos 48^0) + 120 \text{ lb}$$

$$F_4 = -117.098 \text{ lb} + 120 \text{ lb}$$

$$F_4 = +2.90200 \text{ lb}$$ (positive sign indicates agreement with assumed sense)

$$F_4 = \underline{\underline{2.90200 \text{ lb} \rightarrow}}$$

cont'd.

Example 6-3: (cont'd.)

Applying static equilibrium by summing forces in the vertical direction:

$$\Sigma F_V = 0$$

$$0 = \pm F_{1V} \pm F_{2V} \pm F_{3V} \pm F_{4V}$$

<u>Where</u>: $F_{1V} = F_1 \sin\theta \downarrow$

$F_{3V} = F_3 \downarrow$

$$0 = -F_1 \sin\theta - F_3$$

$$F_3 = -F_1 \sin\theta$$

$$F_3 = -(175\text{ lb})(\sin 48^0)$$

$F_3 = -130.050\text{ lb}$ (negative sign indicates disagreement with assumed sense)

$$F_3 = \underline{\underline{130.050\text{ lb} \uparrow}}$$

<u>Answer</u>:
$F_3 = 130.1\text{ lb} \uparrow$
$F_4 = 2.902\text{ lb} \rightarrow$
$C_A = 2321\text{ lb-ft}$ ↻

<u>SUMMARY</u>

A couple is a pure rotational tendency caused by two forces that have equal magnitudes, opposite sense, and parallel but separate lines of action. A couple's moment is the product of ONE force and the perpendicular distance between the two forces' lines of action. The effect of a couple (the couple's moment) is the same for any point in the plane of the couple.

Varignon's Theorem can also be used to calculate the moment of a couple, since a couple's moment is also equal to the sum of the moments produced by the components of the forces that define the couple.

Static equilibrium of a coplanar force-couple system is established using essentially the same methods as those used to establish static equilibrium of a coplanar force system. Care must be taken to include ALL couples in each moment equilibrium equation, regardless of the original point of application of the couple.

FURTHER EXAMPLE PROBLEMS (solutions in GFSA format are on the following pages)

Example 6-4 A force-couple system is applied as shown below. Determine the total moment that the system produces with respect to point B.

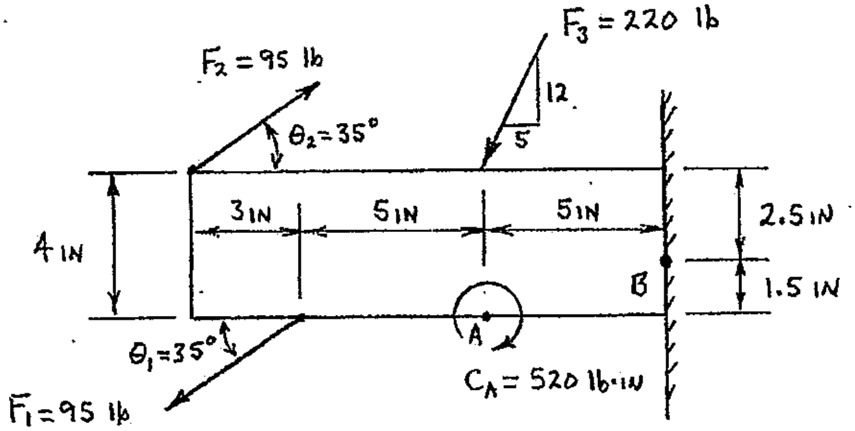

Example 6-5 The rectangular plate shown below is in static equilibrium due to the applied force-couple system. Determine forces F_1, F_2 and F_3.

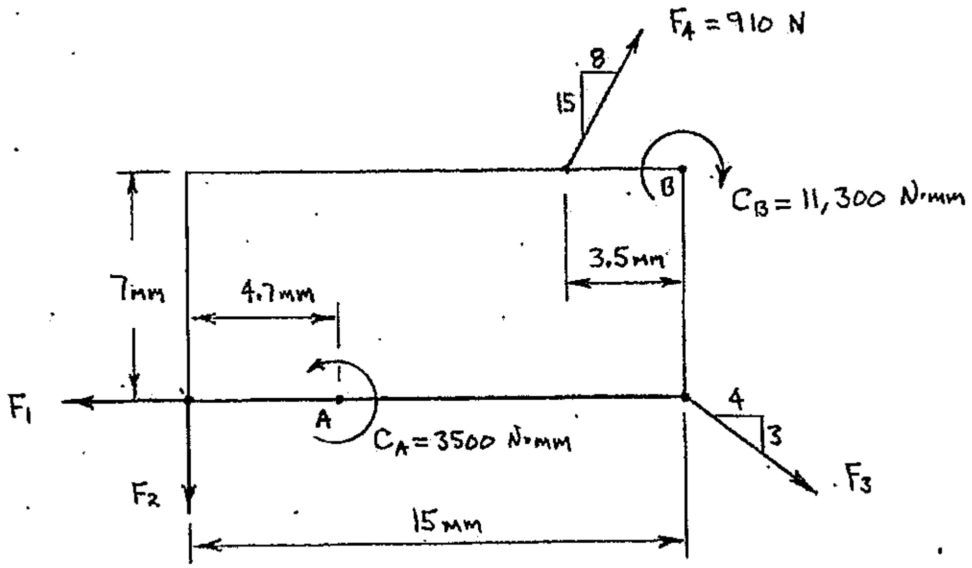

PROBLEM: EXAMPLE 6-4

GIVEN: A FORCE-COUPLE SYSTEM IS APPLIED AS SHOWN BELOW.

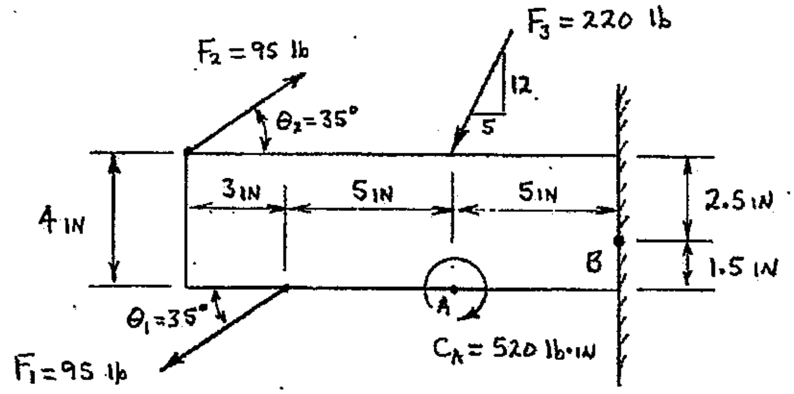

FIND: DETERMINE THE TOTAL MOMENT WITH RESPECT TO POINT B.

SOLUTION:

WORKING DIAGRAM:

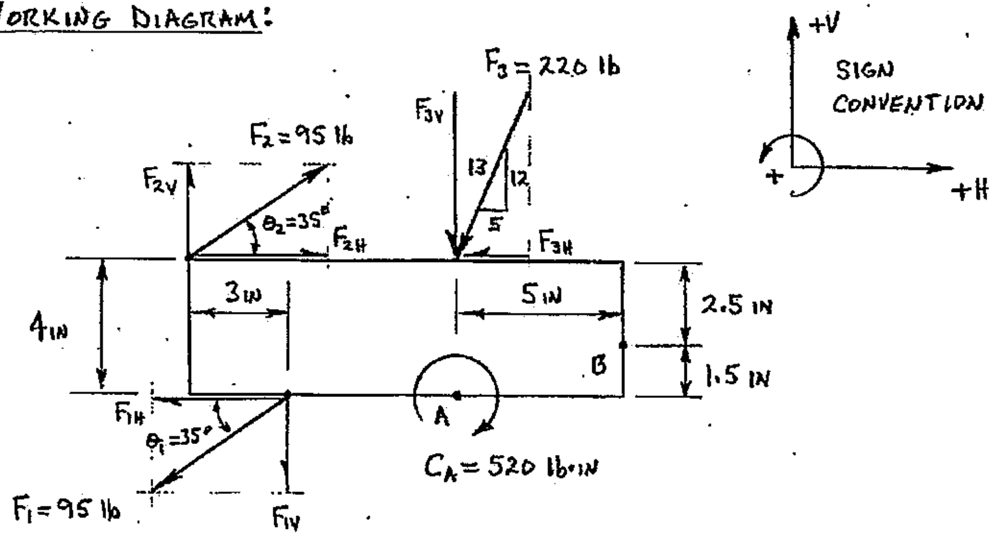

FORCES F_1 AND F_2 FORM A COUPLE WITH CLOCKWISE SENSE.

VARIGNON'S THEOREM WILL BE USED TO DETERMINE THE MOMENT OF THE COUPLE FORMED BY F_1 AND F_2. THE COUPLE'S MOMENTS (ONE DUE TO H-COMPONENTS AND ONE DUE TO V-COMPONENTS) WILL BE SUMMED WITH ALL OTHER INDIVIDUAL MOMENTS ABOUT POINT B.

CONT'D.

PROBLEM: EXAMPLE 6-4 (CONT'D.)

$M_B = \Sigma M_{iB}$

$M_B = \pm$[COUPLE FROM $F_1 + F_2$ H-COMPONENTS] $\pm$ [COUPLE FROM $F_1 + F_2$ V-COMPONENTS]

$\pm[(F_{3H})(d\perp)] \pm [(F_{3V})(d\perp)] \pm C_A$

$M_B = \pm[(F_{1H})(d\perp)] \pm [(F_{1V})(d\perp)] \pm [(F_{3H})(d\perp)] \pm [(F_{3V})(d\perp)] \pm C_A$

WHERE:
$F_{1H} = F_1 \cos\theta_1$ @ $d\perp = 4$ IN ↻
$F_{1V} = F_1 \sin\theta_1$ @ $d\perp = 3$ IN ↻
$F_{3H} = (5/13)F_3$ @ $d\perp = 2.5$ IN ↺
$F_{3V} = (12/13)F_3$ @ $d\perp = 5$ IN ↺

$M_B = -[(F_1 \cos\theta_1)(4\text{ IN})] - [(F_1 \sin\theta_1)(3\text{ IN})] + [(5/13)(F_3)(2.5\text{ IN})] + [(12/13)(F_3)(5\text{ IN})] - C_A$

$M_B = -[(95\text{ lb})(\cos 35°)(4\text{ IN})] - [(95\text{ lb})(\sin 35°)(3\text{ IN})] + [(5/13)(220\text{ lb})(2.5\text{ IN})]$

$+ [(12/13)(220\text{ lb})(5\text{ IN})] - 520\text{ lb}\cdot\text{IN}$

$M_B = -311.278\text{ lb}\cdot\text{IN} - 163.469\text{ lb}\cdot\text{IN} + 211.538\text{ lb}\cdot\text{IN} + 1015.38\text{ lb}\cdot\text{IN} - 520\text{ lb}\cdot\text{IN}$

$M_B = +232.176\text{ lb}\cdot\text{IN}$

$M_B = \underline{232.176\text{ lb}\cdot\text{IN}}$ ↺

ANSWER:

$M_B = 232.2\text{ lb}\cdot\text{IN}$ ↺

PROBLEM: EXAMPLE 6-5

GIVEN: THE RECTANGULAR PLATE SHOWN BELOW IS IN STATIC EQUILIBRIUM DUE TO THE APPLIED FORCE-COUPLE SYSTEM.

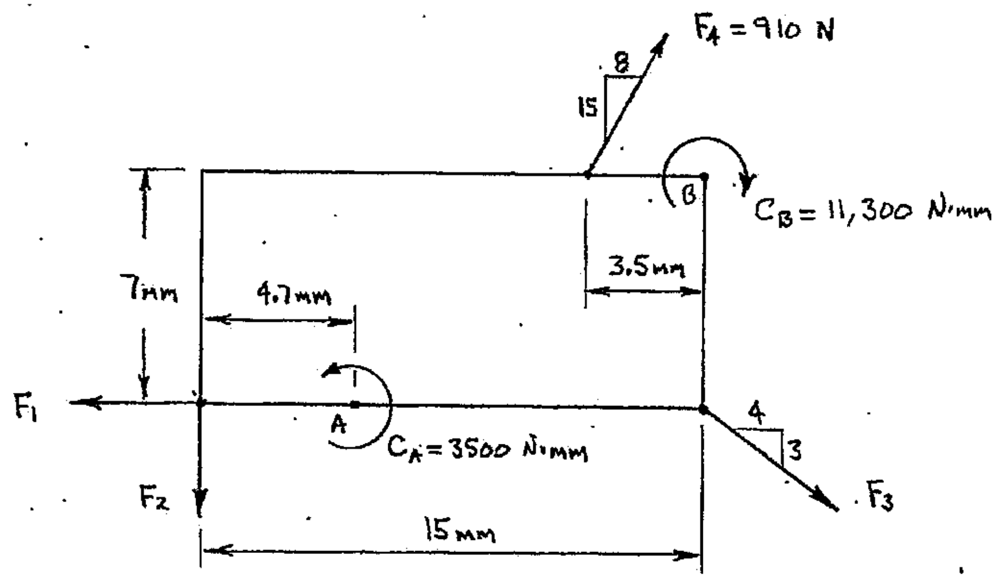

FIND: DETERMINE FORCES F_1, F_2 AND F_3.

SOLUTION:

WORKING DIAGRAM:

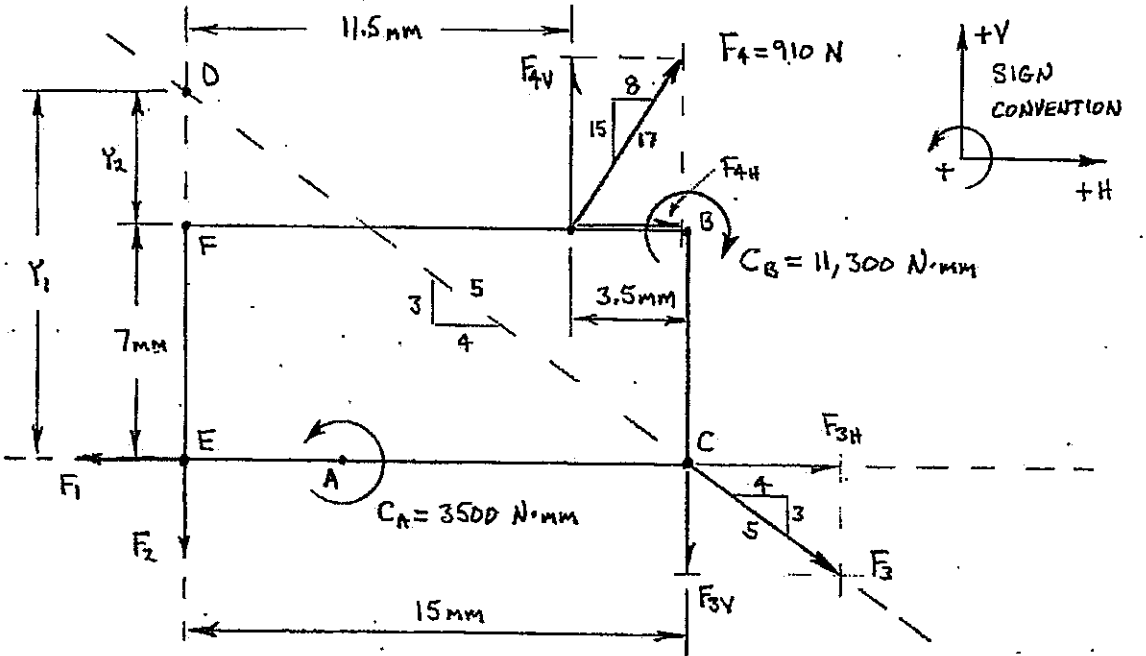

CONT'D.

PROBLEM: EXAMPLE 6-5 (CONT'D.)

ESTABLISH LOCATION OF POINT D: $(Y_1 + Y_2)$

FROM SIMILAR TRIANGLES:

$$\frac{Y_1}{CE} = \frac{3}{4}$$

$$Y_1 = \left(\frac{3}{4}\right) CE$$

$$Y_1 = \left(\frac{3}{4}\right)(15\,mm)$$

$$Y_1 = 11.2500\ mm$$

$$Y_2 = Y_1 - EF$$

$$Y_2 = 11.25\,mm - 7\,mm$$

$$Y_2 = 4.25\,mm$$

APPLYING STATIC EQUILIBRIUM BY SUMMING MOMENTS ABOUT POINT C:

$$\Sigma M_C = 0$$

$$0 = \pm[(F_1)(d\perp)]^{0} \pm [(F_{2H})(d\perp)]^{0} \pm [(F_{2V})(d\perp)] \pm [(F_3)(d\perp)]^{0} \pm [(F_{4H})(d\perp)] \pm [(F_{4V})(d\perp)] \pm C_A \pm C_B$$

WHERE: $F_{2V} = F_2$ @ $d\perp = 15\,mm$ ↺

$F_{4H} = (8/17)F_4$ @ $d\perp = 7\,mm$ ↻

$F_{4V} = (15/17)F_4$ @ $d\perp = 3.5\,mm$ ↻

$$0 = +[(F_2)(15\,mm)] - [(8/17)(F_4)(7\,mm)] - [(15/17)(F_4)(3.5\,mm)] + C_A - C_B$$

$$F_2 = \frac{+[(8/17)(F_4)(7\,mm)] + [(15/17)(F_4)(3.5\,mm)] - C_A + C_B}{15\,mm}$$

$$F_2 = \frac{+[(8/17)(910\,N)(7\,mm)] + [(15/17)(910\,N)(3.5\,mm)] - 3500\,N{\cdot}mm + 11{,}300\,N{\cdot}mm}{15\,mm}$$

$$F_2 = +907.196\ N$$

$$F_2 = 907.196\ N \downarrow$$

CONT'D.

PROBLEM: EXAMPLE 6-5 (CONT'D.)

APPLYING STATIC EQUILIBRIUM BY SUMMING MOMENTS ABOUT POINT D:

$\Sigma M_D = 0$

$0 = \pm[(F_{1H})(d\perp)] \pm [(F_{1V})(d\perp)]^{0} \pm [(F_2)(d\perp)]^{0} \pm [(F_3)(d\perp)]^{0} \pm [(F_{4H})(d\perp)]$

$\pm[(F_{4V})(d\perp)] \pm C_A \pm C_B$

WHERE: $F_{1H} = F_1$ @ $d\perp = Y_1$ ↻

$F_{4H} = (8/17) F_4$ @ $d\perp = Y_2$ ↺

$F_{4V} = (15/17) F_4$ @ $d\perp = 11.5\,mm$ ↺

$0 = -[(F_1)(Y_1)] + [(8/17)(F_4)(Y_2)] + [(15/17)(F_4)(11.5\,mm)] + C_A - C_B$

$$F_1 = \frac{+[(8/17)(F_4)(Y_2)] + [(15/17)(F_4)(11.5\,mm)] + C_A - C_B}{Y_1}$$

$$F_1 = \frac{+[(8/17)(910\,N)(4.25\,mm)] + [(15/17)(910\,N)(11.5\,mm)] + 3500\,N{\cdot}mm - 11{,}300\,N{\cdot}mm}{11.25\,mm}$$

$F_1 = +289.229\ N$

$F_1 = 289.229\ N \leftarrow$

APPLYING STATIC EQUILIBRIUM BY SUMMING MOMENTS ABOUT POINT E:

$\Sigma M_E = 0$

$0 = \pm[(F_1)(d\perp)]^{0} \pm [(F_2)(d\perp)]^{0} \pm [(F_{3H})(d\perp)]^{0} \pm [(F_{3V})(d\perp)] \pm [(F_{4H})(d\perp)]$

$\pm[(F_{4V})(d\perp)] \pm C_A \pm C_B$

WHERE: $F_{3V} = (3/5) F_3$ @ $d\perp = 15\,mm$ ↻

$F_{4H} = (8/17) F_4$ @ $d\perp = 7\,mm$ ↻

$F_{4V} = (15/17) F_4$ @ $d\perp = 11.5\,mm$ ↺

$0 = -[(3/5)(F_3)(15\,mm)] - [(8/17)(F_4)(7\,mm)] + [(15/17)(F_4)(11.5\,mm)] + C_A - C_B$

$$F_3 = \frac{-[(8/17)(F_4)(7\,mm)] + [(15/17)(F_4)(11.5\,mm)] + C_A - C_B}{(3/5)(15\,mm)}$$

CONT'D.

PROBLEM: EXAMPLE 6-5 (CONT'D.)

$$F_3 = \frac{-\left[(8/17)(910\ N)(7\ mm)\right] + \left[(15/17)(910\ N)(11.5\ mm)\right] + 3500\ N\cdot mm - 11{,}300\ N\cdot mm}{(3/5)(15\ mm)}$$

$$F_3 = -173.758\ N$$

$$F_3 = \underline{173.758\ N}$$

VERIFY ANSWERS BY APPLYING STATIC EQUILIBRIUM IN THE H-DIRECTION:

$$\Sigma F_H = 0$$

$$0 = \pm F_{1H} \pm F_{2H} \pm F_{3H} \pm F_{4H} \quad (F_{2H} \rightarrow 0)$$

WHERE: $F_{1H} = F_1 \leftarrow$ AND: $F_1 = +289.229\ N$

$F_{3H} = (4/5)F_3 \rightarrow$ AND: $F_3 = -173.758\ N$

$F_{4H} = (8/17)(F_4) \rightarrow$

$$0 = -F_1 + (4/5)F_3 + (8/17)F_4$$

$$0 = -(+289.229\ N) + (4/5)(-173.758\ N) + (8/17)(910\ N)$$

$$0 = -289.229\ N - 139.006\ N + 428.235\ N$$

$$\underline{0 = 0} \qquad (F_1 + F_3 \text{ VERIFIED})$$

VERIFY ANSWERS BY APPLYING STATIC EQUILIBRIUM IN THE V-DIRECTION:

$$\Sigma F_V = 0$$

$$0 = \pm F_{1V} \pm F_{2V} \pm F_{3V} \pm F_{4V} \quad (F_{1V} \rightarrow 0)$$

WHERE: $F_{2V} = F_2 \downarrow$ AND: $F_2 = +907.196\ N$

$F_{3V} = (3/5)F_3 \downarrow$ AND: $F_3 = -173.758\ N$

$F_{4V} = (15/17)F_4 \uparrow$

$$0 = -F_2 - (3/5)F_3 + (15/17)F_4$$

CONT'D.

PROBLEM: EXAMPLE 6-5 (CONT'D.)

$$0 = -(+907.196\ N) - (3/5)(-173.758\ N) + (15/17)(910\ N)$$

$$0 = -907.196\ N + 104.255\ N + 802.941\ N$$

$$\underline{\underline{0 = 0}}$$

(F_2 VERIFIED)

ANSWER:

$F_1 = 289.2\ N$ ←

$F_2 = 907.2\ N$ ↓

$F_3 = 173.8\ N$ 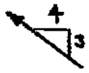

PRACTICE PROBLEMS

6.1 Two forces are applied to an object as shown below. Determine the moment of the couple produced by the forces.

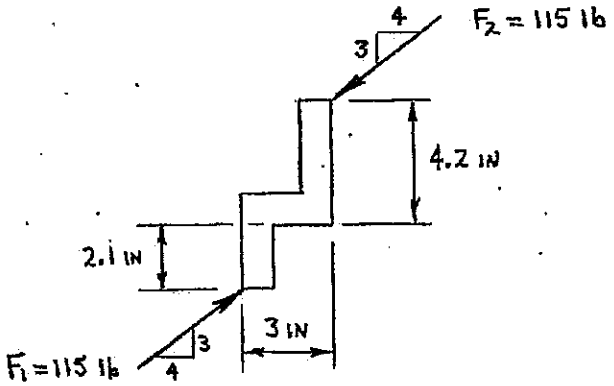

6.2 Two forces are applied as shown below. Determine the moment of the couple produced by the forces.

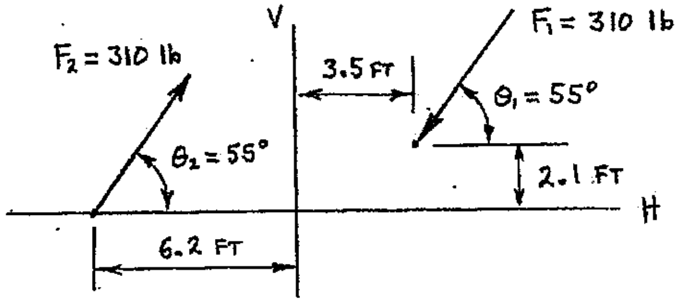

6.3 Three couples are applied as shown below. Determine the total moment produced by the couples with respect to point C.

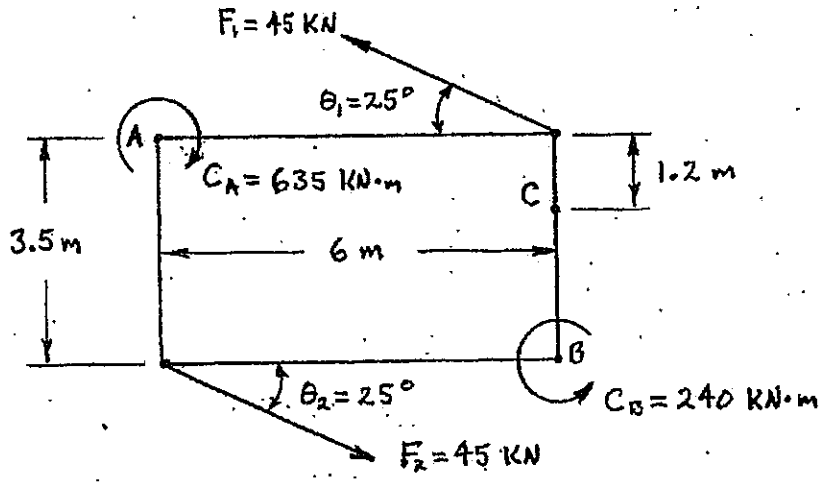

PRACTICE PROBLEMS

6.4 Two forces are applied as shown below. Calculate the moment about point A.

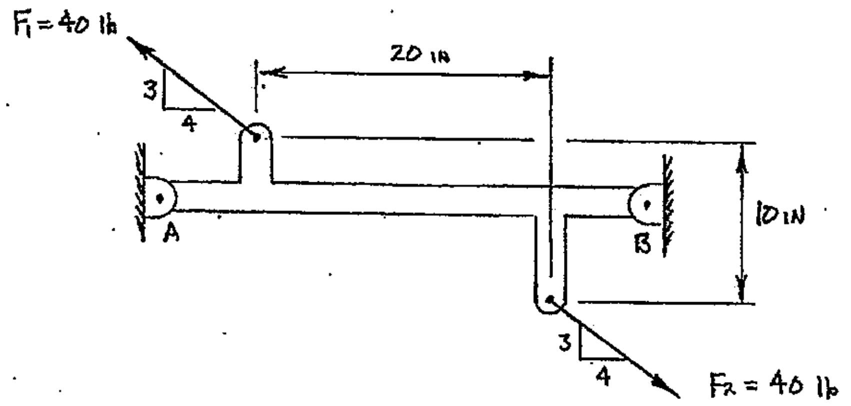

6.5 A force-couple system is applied to a cantilever bracket as shown below. Determine the total moment with respect to point A.

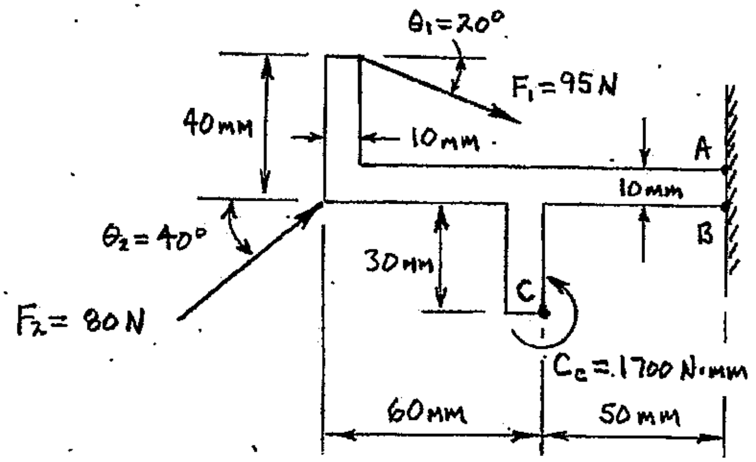

6.6 A cantilever bracket has forces applied as shown below. Calculate the moment with respect to point A.

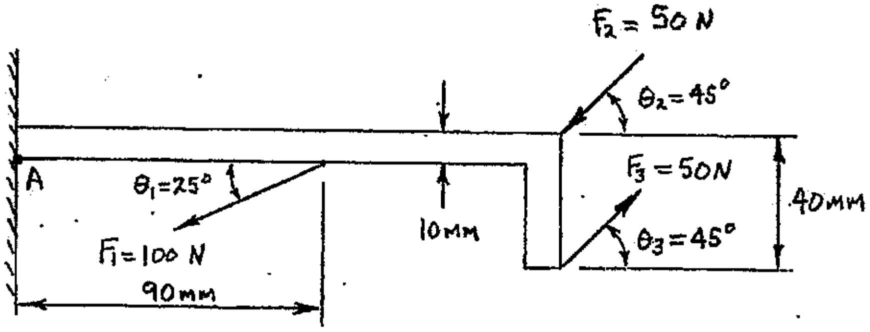

PRACTICE PROBLEMS

6.7 A force-couple system is applied as shown below. Determine the total moment produced with respect to point B.

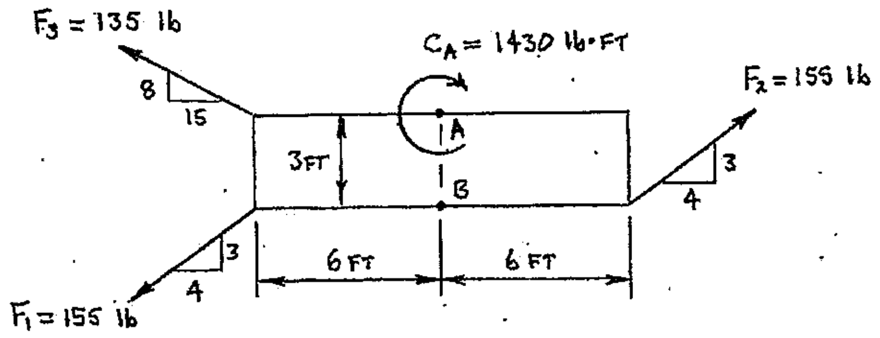

6.8 A force-couple system is applied as shown below. Calculate the total moment about point B.

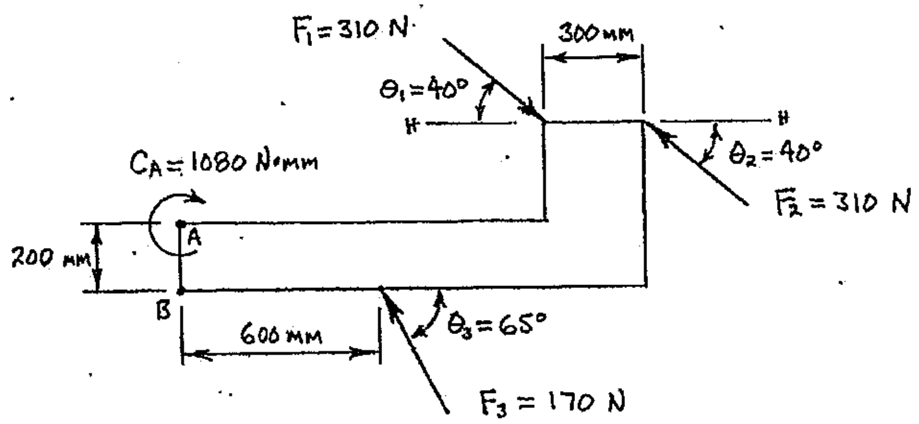

6.9 The object shown below is in static equilibrium. Determine the couple C_3 that is required to maintain static equilibrium.

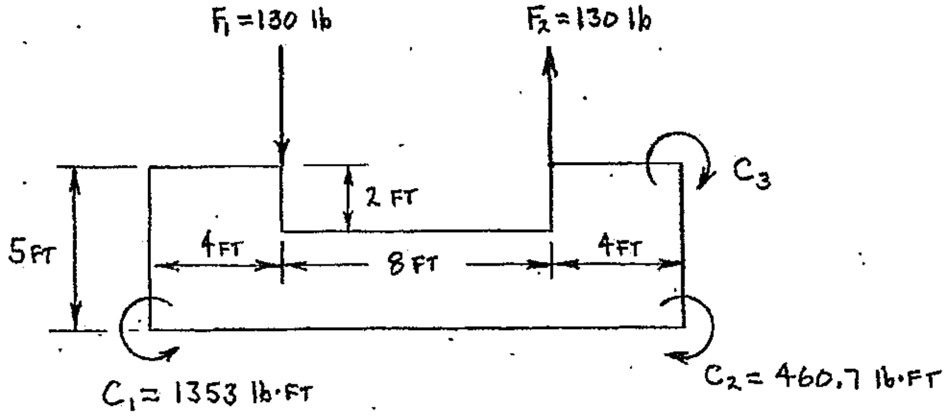

PRACTICE PROBLEMS

6.10 The object shown below is in static equilibrium due the the applied force-couple system. Determine forces F_2, F_3 and F_4.

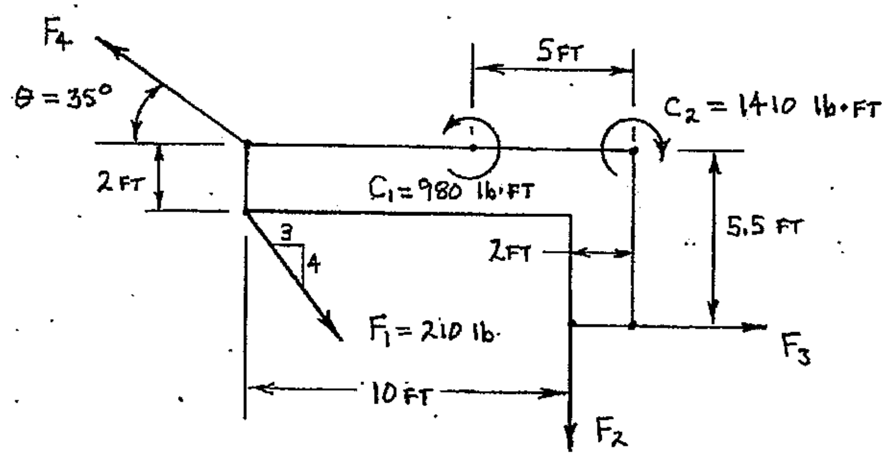

6.11 The object shown below is in static equilibrium due to the applied force-couple system. Determine F_3, F_4 and C_A.

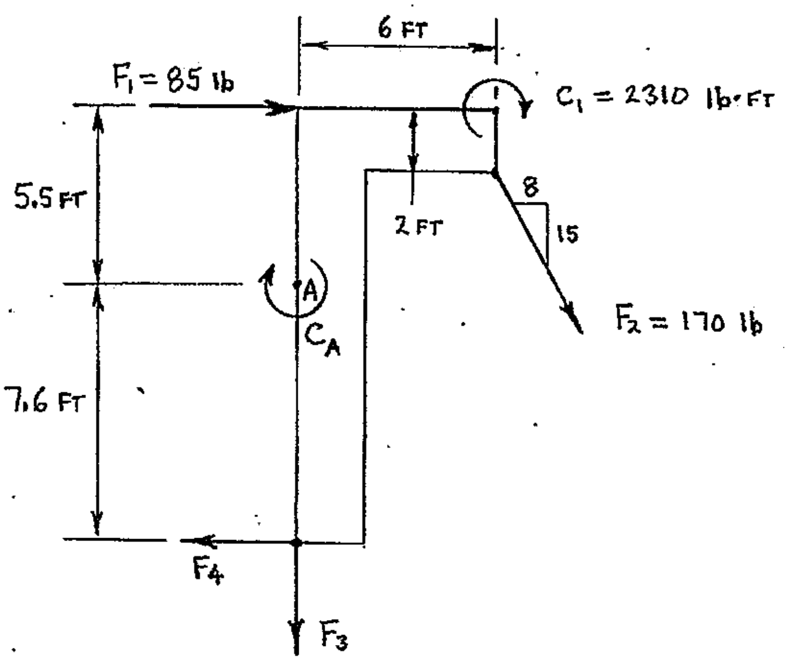

Chapter 7: Equivalent Force Systems

Equivalent Force Systems

An *equivalent force system* is normally a simplified version of an original force system. An equivalent force system must provide translational (linear) and rotational effects that are mathematically *identical* to those produced by the original system.

Equivalent system's effects = Original system's effects

$$\Sigma F_{X_{equivalent}} = \Sigma F_{X_{original}}$$
$$\Sigma F_{Y_{equivalent}} = \Sigma F_{Y_{original}}$$
$$\Sigma M_{P_{equivalent}} = \Sigma M_{P_{original}}$$ (where P is the same point in each system)

A complicated original force system is typically reduced to (and replaced with) either a single resultant force, or with a force-couple system that consists of one force and one couple applied at a specific location. This new equivalent system could then be used to help streamline further computations that would normally be based on the more complex original force system. The term "force system" is used here in a general sense; a force system could be made up of any combination of forces, couples, distributed loads, etc.

Reducing an Original Force System to an Equivalent Force-Couple System

An original (given) force system could be reduced to (replaced with) a system that consists of ***one force*** and ***one couple*** that are to be applied at a new, specified location. The single force must provide translational effects identical to those of the original system, and the single couple provides rotational effects identical to those of the original system. The procedure for replacing an original force system with an equivalent force-couple system is shown below:

Procedure:

1. Construct a complete working diagram of the original force-couple system. Evaluate the original system's effects to determine the components of the equivalent (new) force, and the equivalent (new) couple. The original (old) system's rotational effects must be evaluated with respect to the point at which the equivalent force-couple system is to be applied.

$$F_{X_{new}} = \Sigma F_{X_{old}}$$
$$F_{Y_{new}} = \Sigma F_{Y_{old}}$$
$$C_{P_{new}} = \Sigma M_{P_{old}}$$

Where: P is the specified point of application in the new (equivalent) system.
P is the same point in each system.

2. Construct a working diagram of the new (equivalent) force-couple system such that:
   a. The new (equivalent) system is applied at the specified location.
   b. The new system produces the same effects as the original system.

$$F_{X_{new}} = \Sigma F_{X_{old}}$$

$$F_{Y_{new}} = \Sigma F_{Y_{old}}$$

$$C_{P_{new}} = \Sigma M_{P_{old}}$$ (P is the <u>same</u> point in each system)

The following example problems demonstrate how to replace an original force system with an equivalent force-couple system that consists of one force and one couple applied at a specific location.

Example 7-1: Replace the force system shown below with an equivalent force-couple system (one force and one couple) applied at point A.

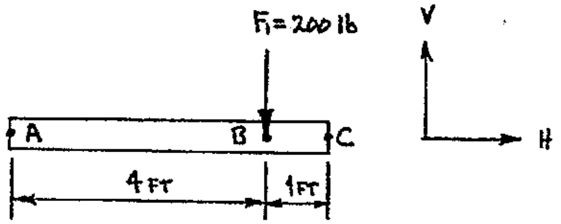

First, develop a working diagram. In this case, the working diagram is basically the same as the given diagram, but with the addition of a sign convention.

<u>Working diagram:</u>

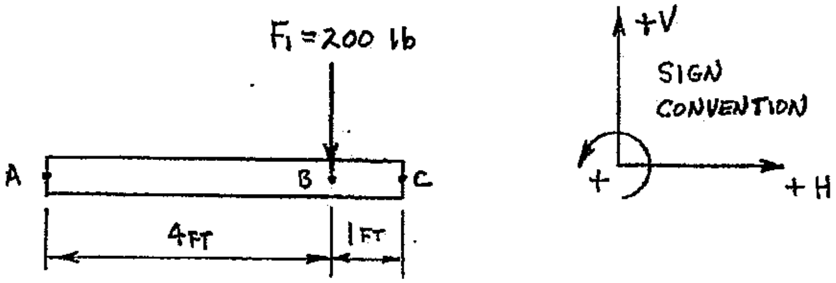

The single force to be applied at point A is normally found by summing forces in two perpendicular directions (in this case, $F_{Hnew} = \Sigma F_H$) and $F_{Vnew} = \Sigma F_V$), and then developing the resultant (F_{new}) from the two components. Since there is only one given force (F_1), and the single force in the equivalent force-couple system must provide translational effects mathematically identical to those of the original system, the given force (F_1) ***is*** the resultant of the original system (by observation) and thus becomes the new single force applied at point A in the equivalent system.

Example 7-1: (cont'd.)

The single equivalent (new) force would be:

$$F_{new} = \Sigma F_{old}$$

$$F_{new} = F_1$$

$$F_{new} = \underline{\underline{200\text{ lb} \downarrow}}$$

When the new single force (F_{new}) is applied at point A, its moment arm with respect to point A would be zero ($d_\perp = 0$) and it would NOT provide any tendency for rotation about point A. So, a couple must be applied at point A in the new equivalent system, and the magnitude and sense of the new couple must be equal to the total moment about point A due to the original system.

$$C_{Anew} = \Sigma M_{Aold}$$

$$C_{Anew} = \pm\left[(F_{1H})(d_\perp)\right] \pm \left[(F_{1V})(d_\perp)\right]$$

$$C_{Anew} = -F_1(d_\perp)$$

$$C_{Anew} = -(200\text{ lb})(4\text{ ft})$$

$$C_{Anew} = -800\text{ lb}$$

$$C_{Anew} = \underline{\underline{800\text{ lb-ft} \circlearrowright}}$$

So, the two force systems shown below would be equivalent (original system is on the left; new, equivalent force-couple system is on the right):

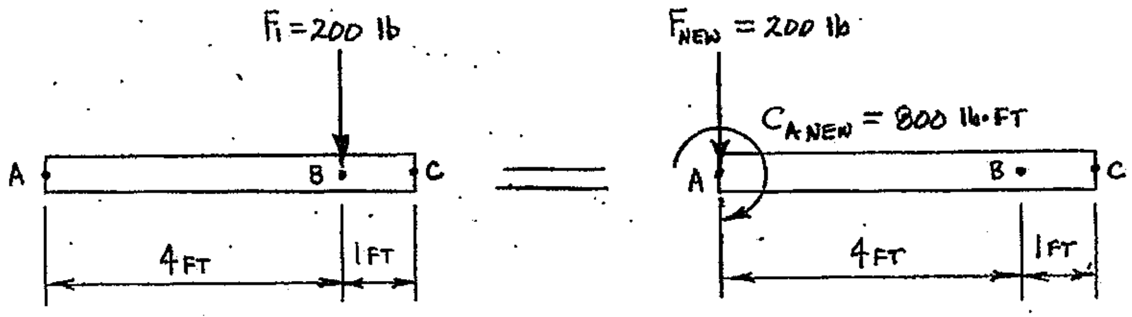

The answer for this problem would be the diagram on the right above, where the new force-couple system is shown applied at the specified point. The magnitudes, directions, senses and point of application for the new equivalent force-couple system are easily shown in a diagram.

Example 7-2: Replace the original force system shown below with an equivalent force-couple system (***one*** force and ***one*** couple) applied at point A.

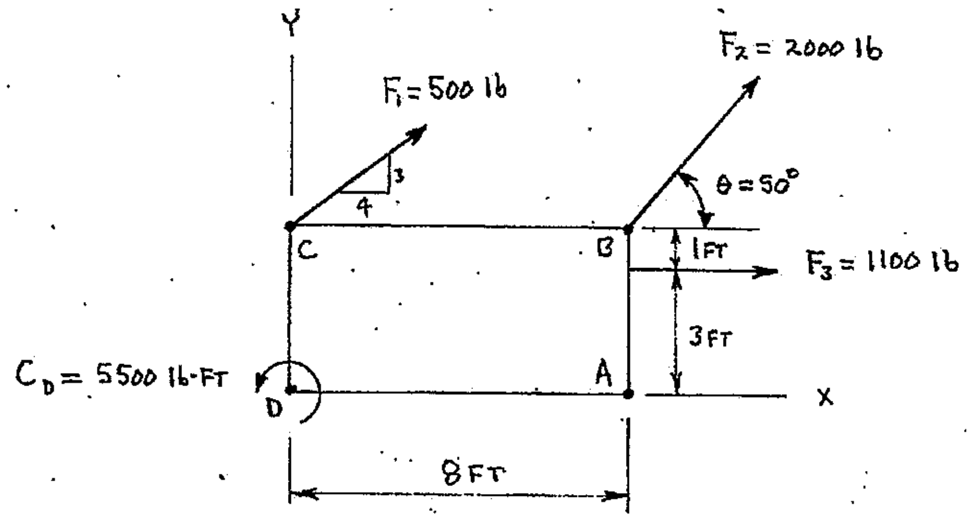

First, construct a complete working diagram from which to evaluate the effects of the original system:

<u>Working Diagram:</u>

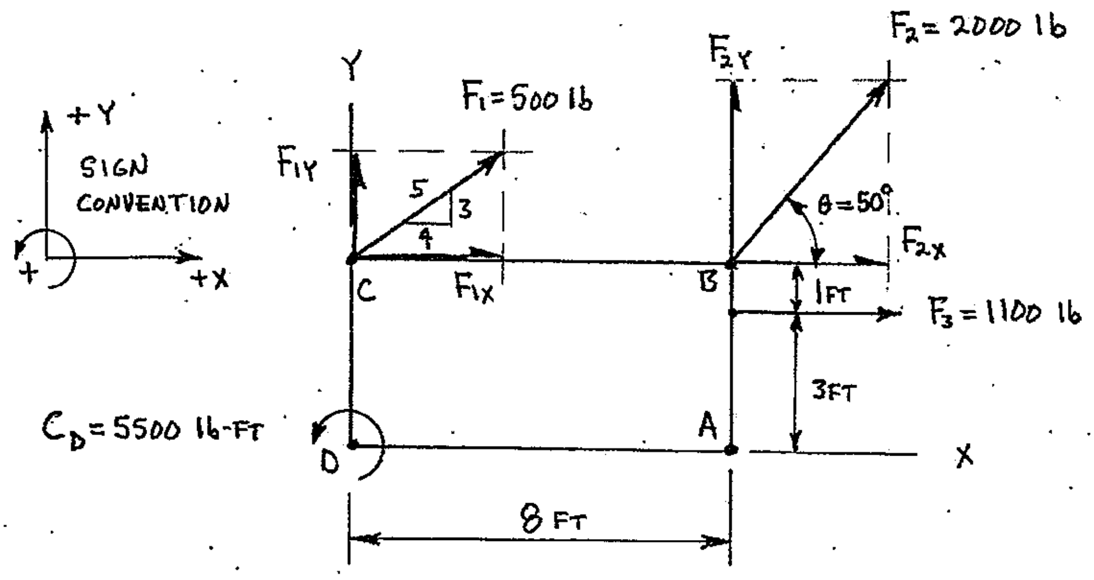

Now the effects of the original system can be evaluated. Since the new force-couple system is to be applied at point A, the rotational effects (summation of moments) must be evaluated at point A and then applied as a couple at point A in the new equivalent force-couple system. Notice that the definitions of equivalence have been left out of the summation equations. The definitions of equivalence have been included in equations up to this point as a "training aid", but will not be included in this and future chapters (although they can be included in your own work if necessary).

Example 7-2: cont'd.

It is important to note that the following three equations are all <u>SUMMATION</u> equations. Consequently, the sign (+ or -) developed and shown in the numerical answer is compared to the working diagram's sign convention to determine the correct sense for the vector answer.

Solving for the horizontal component of F_{new}:

$$F_{Xnew} = \Sigma F_{Xold}$$

$$F_{Xnew} = \pm F_{1X} \pm F_{2X} \pm F_{3X}$$

$$F_{Xnew} = +F_1\left(\frac{4}{5}\right) + F_2(\cos\theta) + F_3$$

$$F_{Xnew} = +500\,lb\left(\frac{4}{5}\right) + 2000\,lb(\cos 50^0) + 1100\,lb$$

$$F_{Xnew} = +400\,lb + 1285.58\,lb + 1100\,lb$$

$$F_{Xnew} = +2785.58\,lb$$

$$F_{Xnew} = \underline{\underline{2785.58\,lb \quad \rightarrow}}$$

Solving for the vertical component of F_{new}:

$$F_{Y\,new} = \Sigma F_{Y\,old}$$

$$F_{Y\,new} = \pm F_{1Y} \pm F_{2Y} \pm F_{3Y}$$ 0

$$F_{Y\,new} = +F_1\left(\frac{3}{5}\right) + F_2(\sin\theta)$$

$$F_{Y\,new} = +500\,lb\left(\frac{3}{5}\right) + 2000\,lb(\sin 50^0)$$

$$F_{Y\,new} = +300\,lb + 1532.09\,lb$$

$$F_{Y\,new} = +1832.09\,lb$$

$$F_{Y\,new} = \underline{\underline{1832.09\,lb \quad \uparrow}}$$

<u>cont'd.</u>

cos45 = $\frac{x}{300}$.

Example 7-2: (cont'd.)

Solving for the new equivalent couple, C_{Anew}:

$$C_{Anew} = \Sigma M_{Aold}$$

$$C_{Anew} = \pm C_D \pm [(F_{1X})(d_\perp)] \pm [(F_{1Y})(d_\perp)] \pm [(F_{2X})(d_\perp)] \pm [(F_{2Y})(d_\perp)]^{0} [(F_{3X})(d\perp)] \pm [(F_{3Y})d_\perp]^{0}$$

$$C_{Anew} = +C_D - \left[F_1\left(\frac{4}{5}\right)\right](4\text{ ft}) - \left[F_1\left(\frac{3}{5}\right)\right](8\text{ ft}) - [F_2(\cos\theta)](4\text{ ft}) - F_3(3\text{ ft})$$

$$C_{Anew} = +5500\text{ lb-ft} - \left[(500\text{ lb})\left(\frac{4}{5}\right)\right](4\text{ ft}) - \left[(500\text{ lb})\left(\frac{3}{5}\right)\right](8\text{ ft}) - [(2000\text{ lb})(\cos 50^\circ)](4\text{ ft})$$
$$-(1100\text{ lb})(3\text{ ft})$$

$$C_{Anew} = +5500\text{ lb-ft} - 1600\text{ lb-ft} - 2400\text{ lb-ft} - 5142.3\text{ lb-ft} - 3300\text{ lb-ft}$$

$$C_{Anew} = -6942.3\text{ lb-ft}$$

$$C_{Anew} = \underline{\underline{6942.3\text{ lb-ft} \circlearrowright}}$$

The new, equivalent force-couple system can now be constructed at point A:

Working diagram #2: (force-couple system at point A)

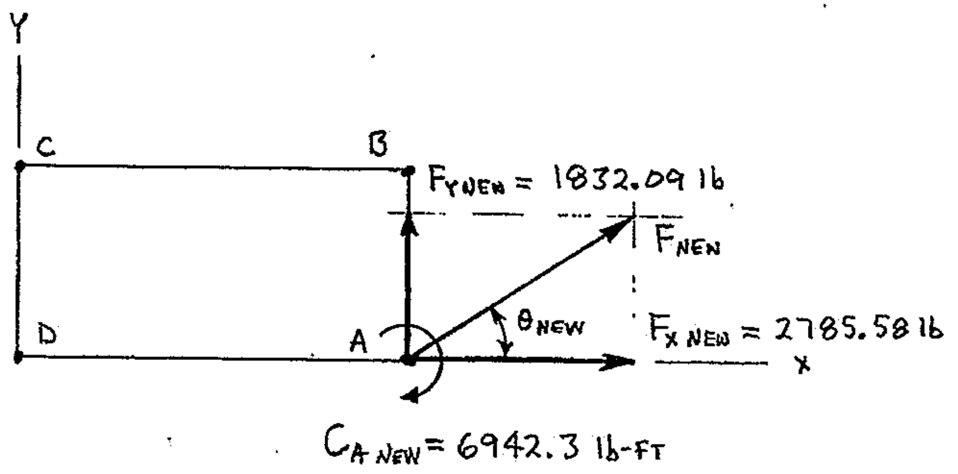

The magnitude of the single force, F_{new}, is found using the Pythagorean Theorem:

$$F_{new} = \sqrt{(F_{Xnew})^2 + (F_{Ynew})^2}$$

$$F_{new} = \sqrt{(2785.58\text{ lb})^2 + (1832.09\text{ lb})^2}$$

$$F_{new} = \underline{\underline{3334.07\text{ lb}}} \quad \text{(magnitude only)}$$

cont'd.

Example 7-2: (cont'd.)

The direction of F_{new}'s line of action is:

$$\tan\theta = \frac{F_{Ynew}}{F_{Xnew}}$$

$$\theta = \tan^{-1}\left(\frac{F_{Ynew}}{F_{Xnew}}\right)$$

$$\theta = \tan^{-1}\left(\frac{1832.09\ \text{lb}}{2785.58\ \text{lb}}\right)$$

$$\theta = \underline{\underline{33.3331^0}}$$

The answer is a diagram of the new force-couple system applied at point A, as shown in the answer box below:

Answer:

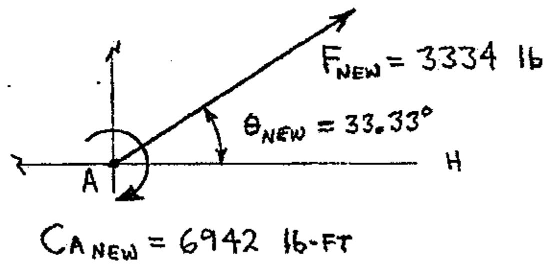

REPLACING AN ORIGINAL FORCE SYSTEM WITH A SINGLE RESULTANT FORCE

The resultant of a force system is a single force developed from the summation of the entire force system. When replacing an original force system with a single resultant force, the resultant must provide both translational and rotational effects that are mathematically identical to the effects of the original system. By definition, a resultant force will provide translational effects that are identical to the original forces that were summed to produce the resultant. To provide identical rotational effects, THE LOCATION OF THE RESULTANT'S LINE OF ACTION BECOMES CRITICAL. The resultant's line of action must be located such that the resultant will provide the same moment (magnitude and sense) as the original system with respect to a specific point. The procedure for replacing an original force system with a single resultant force is shown below:

Procedure:

1. Evaluate the original system's effects to determine the components of the equivalent (new) force. The new force is the single resultant force.

$$F_{Xnew} = \Sigma F_{Xold}$$
$$F_{Ynew} = \Sigma F_{Y\,old}$$

2. Construct a working diagram (working diagram #2) using the components of the new force (the single resultant force). Determine the magnitude, direction and sense of the new single resultant force, F_{new}.

Working diagram #2:

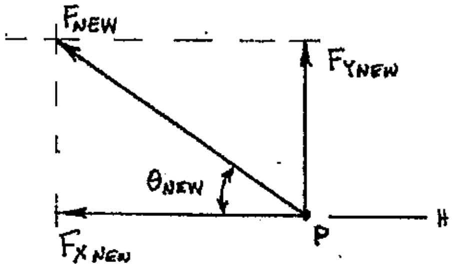

3. Select a convenient point at which to evaluate the rotational effects of the original force system, based on the specifications for describing the resultant force's line of action. The moment produced by the new single resultant force must be the same (magnitude and sense) as the moment produced by the original system with respect to the same point.

$$M_{Pnew} = \Sigma M_{Pold}$$

→ The moment produced by the single resultant force (refers to M_{Pnew})

Where: P is the convenient point to sum moments about
P is the same point in each system

4. Specify the location of the new single resultant force's line of action such that the moment cause by the new force has the same magnitude and sense as M_{Pnew}. Construct a working diagram (working diagram #3) and use the sense found for M_{Pnew} to locate F_{new}'s line of action so that F_{new} will cause a moment that has the same sense as M_{Pnew}. F_{new} is typically applied at a convenient point along its line of action so that only one of its components has a non-zero moment arm with respect to point P (the point momemts were summed about to find M_{Pnew}). Either (or both) of the diagrams shown in working diagram #3 could be used to locate the line of action for the new single resultant force, F_{new}.

Working diagram #3: (for example, based on a counterclockwise M_{Pnew})

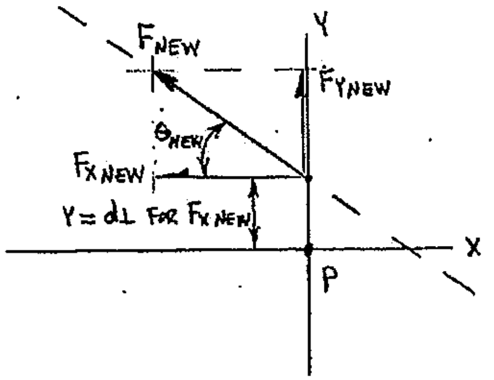

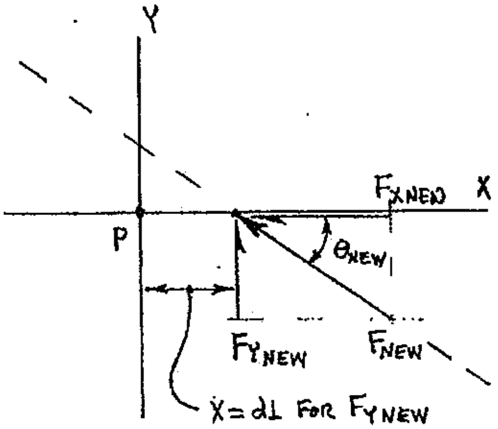

The following example problems demonstrate how to replace an original force system with a new single resultant force.

Example 7-3: A force-couple system is shown below. Replace the original force-couple system with a single resultant force, and specify where the resultant's line of action crosses the horizontal axis.

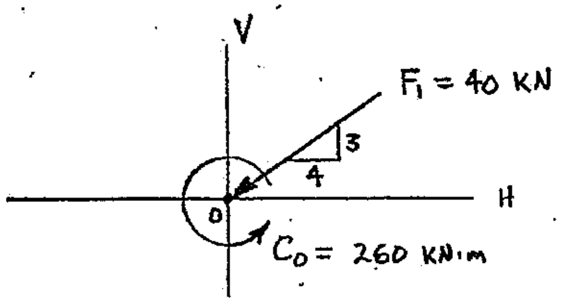

The new resultant force must have magnitude, direction, sense and a point of application. The point of application will be used to establish the location of the resultant's line of action such that the resultant produces rotational effects identical to those of the original system (in this case, the resultant must provide the same moment as C_O = 260 kN-m ↺).

To provide identical translational effects, the resultant must have the same magnitude, direction and sense as the original single force, as shown below:

By observation: $F_{new} = F_1 = 40\text{kN}$ 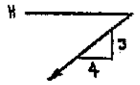

The line of action of the single resultant force, F_{new}, must now be located so that F_{new} will produce the same moment about point O as that from the original system (C_O = 260 kN-m ↺). To produce a moment with counterclockwise sense, the line of action of the single resultant force must lie to the LEFT of point O (as shown in the working diagram below). To simplify calculations, the point of application of F_{new} is shown ***on*** the horizontal axis (choosing to place F_{new}'s point of application on the H-axis results in a moment arm of zero (0) for the horizontal component of F_{new}).

Working diagram:

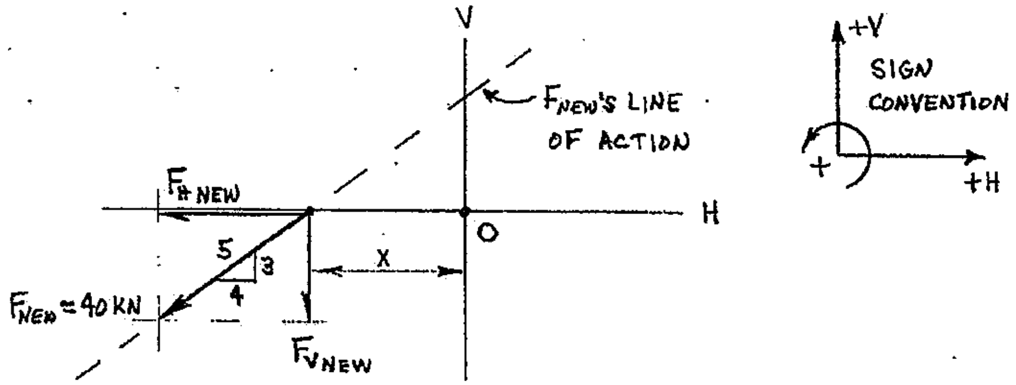

Remember, the moment produced by the single resultant force with respect to point O is M_{Onew}, and M_{Onew} is equal to the sum of all individual moments from the original system ($M_{Onew} = C_O$ = 260 kn-m ↺, for this example). The location of F_{new}'s line of action can now be established using Varignon's Theorem:

$$\pm M_{Onew} = \pm\left[(F_{Hnew})(d_\perp)\right] \pm \left[(F_{Vnew})(d_\perp)\right]$$

$$+M_{Onew} = +\left[\left(\frac{3}{5}\right)(F_V)(x)\right]$$

$$x = \frac{+M_{Onew}}{+\left[\left(\frac{3}{5}\right)(F_V)\right]}$$

$$x = \frac{+(260\text{ kN-m})}{+\left[\left(\frac{3}{5}\right)(40\text{ kN})\right]}$$

$$x = \underline{\underline{10.8333\text{ m}}}$$ (F_{new} intersects the H-axis to the left of point O)

Example 7-3: (cont'd.)

One of the most common ways to specify the magnitude, direction, sense and point of application for the single resultant force (F_{new}) is via a diagram. The point of application for this example was required to be that point where the single resultant's line of action crossed the horizontal axis. This point of application is established by the distance x in the diagram of the answer shown below.

Answer:

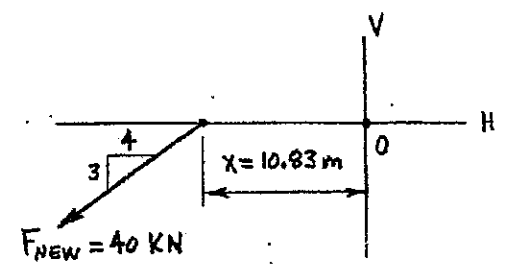

Example 7-4: Replace the original force-couple system shown below with a single resultant force, and specify the location where the resultant's line of action crosses the x-axis. (This is the same original force system that was used for Example 5-2).

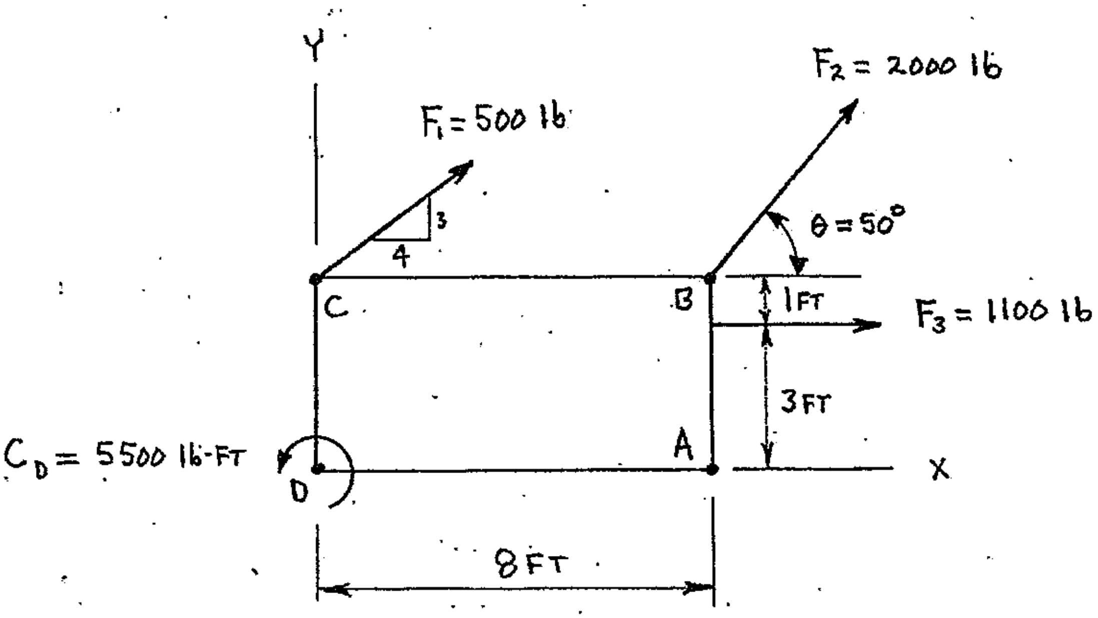

cont'd.

Example 7-4: cont'd.

First, construct a complete working diagram from which to evaluate the effects of the original system:

Initial Working Diagram:

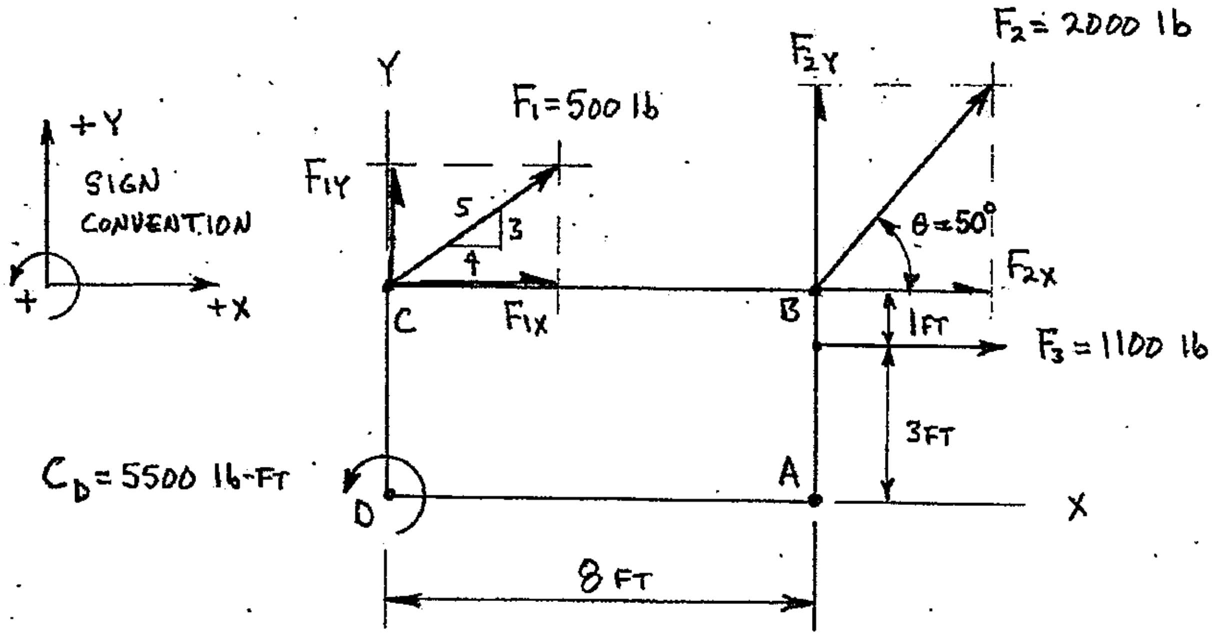

The effects of the original system can now be evaluated.

Solving for the X-component of F_{new}:

$$F_{Xnew} = \Sigma F_{Xold}$$

$$F_{Xnew} = \pm F_{1X} \pm F_{2X} \pm F_{3X}$$

$$F_{Xnew} = +F_1\left(\frac{4}{5}\right) + F_2(\cos\theta) + F_3$$

$$F_{Xnew} = +500\,\text{lb}\left(\frac{4}{5}\right) + 2000\,\text{lb}(\cos 50^0) + 1100\,\text{lb}$$

$$F_{Xnew} = +400\,\text{lb} + 1285.58\,\text{lb} + 1100\,\text{lb}$$

$$F_{Xnew} = +2785.58\,\text{lb}$$

$$F_{Xnew} = \underline{\underline{2785.58\,\text{lb} \;\rightarrow}}$$

cont'd.

Example 7-4: (cont'd.)

Solving for the Y-component of F_{new}:

$$F_{Y\,new} = \Sigma F_{Y\,old}$$
$$F_{Y\,new} = \pm F_{1Y} \pm F_{2Y} \pm \cancel{F_{3Y}}^{\,0}$$
$$F_{Y\,new} = +F_1\left(\frac{3}{5}\right) + F_2(\sin\theta)$$
$$F_{Y\,new} = +500\,\text{lb}\left(\frac{3}{5}\right) + 2000\,\text{lb}(\sin 50^0)$$
$$F_{Y\,new} = +300\,\text{lb} + 1532.09\,\text{lb}$$
$$F_{Y\,new} = +1832.09\,\text{lb}$$
$$F_{Y\,new} = \underline{\underline{1832.09\,\text{lb}\ \uparrow}}$$

A second working diagram is now constructed and used to determine the magnitude, sense and direction for the new single resultant force, F_{new}:

Working diagram #2: (used to find F_{new} and θ_{new})

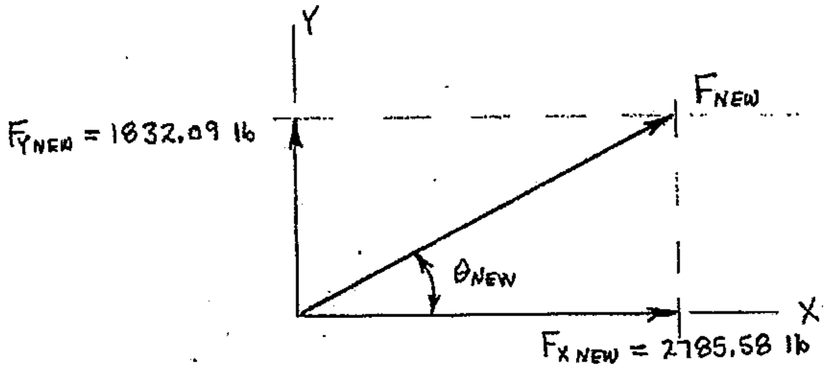

Solving for the magnitude of the single resultant force, F_{new}:

$$F_{new} = \sqrt{(F_{Xnew})^2 + (F_{Ynew})^2}$$
$$F_{new} = \sqrt{(2785.58\text{ lb})^2 + (1832.09\text{ lb})^2}$$
$$F_{new} = \underline{\underline{3334.07\text{ lb}}} \qquad \text{(magnitude only)}$$

cont'd.

Example 7-4: (cont'd.)

Solving for the direction of the single resultant force, F_{new}:

$$\tan\theta_{new} = \frac{F_{Ynew}}{F_{Xnew}}$$

$$\theta_{new} = \tan^{-1}\left(\frac{F_{Ynew}}{F_{Xnew}}\right)$$

$$\theta_{new} = \tan^{-1}\left(\frac{1832.09\,\text{lb}}{2785.58\,\text{lb}}\right)$$

$$\theta_{new} = \underline{\underline{33.3331^0}}$$

So, the single resultant force is: $F_{new} = 3334.07$ lb

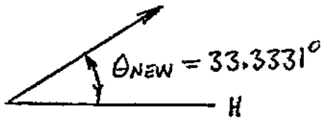

One requirement of the original problem statement is to specify the location where the single resultant's line of action crosses the X-axis. Since point A lies <u>on</u> the X-axis, it will be used as a convenient point to evaluate the rotational effects (summation of moments) of the original system.

Solving for the moment (M_{Anew}) that must be produced by the single resultant force with respect to point A:

$$M_{Anew} = \Sigma M_{Aold}$$

$$M_{Anew} = \pm C_D \pm[(F_{1X})(d_\perp)] \pm [(F_{1Y})(d_\perp)] \pm [(F_{2X})(d_\perp)] \pm [(F_{2Y})(d_\perp)] [(F_{3X})(d\perp)] \pm [(F_{3Y})d_\perp]$$

$$M_{Anew} = +C_D - \left[F_1\left(\frac{4}{5}\right)\right](4\text{ ft}) - \left[F_1\left(\frac{3}{5}\right)\right](8\text{ ft}) - [F_2(\cos\theta)](4\text{ ft}) - F_3(3\text{ ft})$$

$$M_{Anew} = +5500\text{ lb-ft} - \left[(500\text{ lb})\left(\frac{4}{5}\right)\right](4\text{ ft}) - \left[(500\text{ lb})\left(\frac{3}{5}\right)\right](8\text{ ft}) - [(2000\text{ lb})(\cos 50^0)](4\text{ ft})$$

$$-(1100\text{ lb})(3\text{ ft})$$

$$M_{Anew} = +5500\text{ lb-ft} - 1600\text{ lb-ft} - 2400\text{ lb-ft} - 5142.3\text{ lb-ft} - 3300\text{ lb-ft}$$

$$M_{Anew} = -6942.3\text{ lb-ft}$$

$$M_{Anew} = \underline{\underline{6942.3\text{ lb-ft}\ \circlearrowright}}$$

<u>cont'd.</u>

Example 7-4: (cont'd.)

The line of action of the single resultant force, F_{new}, must now be located so that F_{new} will produce the same moment about point A as that from the original system ($M_{Anew} = \Sigma M_{Aold} = 6942.3$ lb-ft ↻). To produce a moment with CLOCKWISE sense, the line of action of the single resultant force must lie to the <u>LEFT</u> of point A (as shown in the working diagram below). To simplify calculations, the point of application of F_{new} is shown ***on*** the X-axis (choosing to place F_{new}'s point of application on the X-axis results in a moment arm of zero for the X-component of F_{new}).

<u>Working diagram #3:</u> (used to locate the line of action of the resultant)

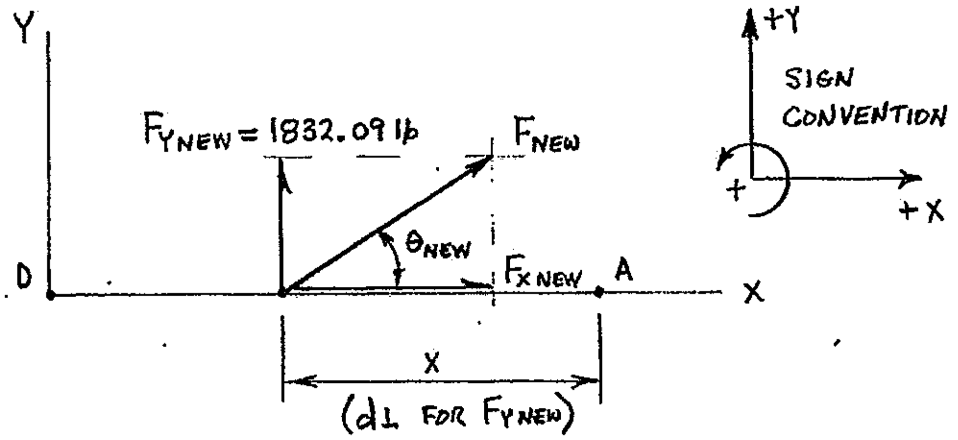

Remember, the moment produced by the single resultant force (F_{new}) with respect to point A is M_{Anew}, and M_{Anew} is equal to the sum of all individual moments from the original system ($M_{Anew} = \Sigma M_{Aold} = 6942.3$ lb-ft ↻, for this example). The location of F_{new}'s line of action can now be established using Varignon's Theorem:

$$\pm M_{A_{new}} = \pm\left[\left(F_{X_{new}}\right)\left(d_\perp\right)\right] \pm \left[\left(F_{Y_{new}}\right)\left(d_\perp\right)\right]$$

$$-M_{A_{new}} = -\left[\left(F_{Y_{new}}\right)(x)\right]$$

$$x = \frac{-M_{A_{new}}}{-\left(F_{Y_{new}}\right)}$$

$$x = \frac{-(6942.3 \text{ lb-ft})}{-(1832.09 \text{ lb})}$$

$$x = \underline{\underline{3.78928 \text{ ft}}}$$

(F_{new} intersects the X-axis to the <u>left</u> of point A)

<u>cont'd.</u>

Example 7-4: (cont'd.)

A final answer can now be developed. The answer is normally a diagram that shows the magnitude, direction and sense of the single resultant force along with the location of its line of action with respect to a known reference (point A).

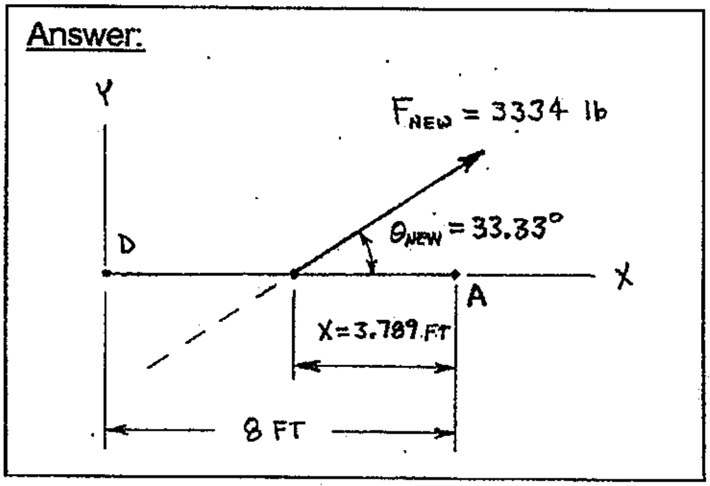

SUMMARY

An equivalent force system is normally a simplified version of an original force system. An equivalent force system must provide translational (linear) and rotational effects that are ***identical*** to those produced by the original system, as shown below:

Equivalent system's effects = Original system's effects

$$\Sigma F_{X\,equivalent} = \Sigma F_{X\,original}$$

$$\Sigma F_{Y\,equivalent} = \Sigma F_{Y\,original}$$

$$\Sigma M_{P\,equivalent} = \Sigma M_{P\,original}$$ (where P is the same point in each system)

A complicated original force system could be replaced with an equivalent force system that consists of either a single resultant force with a specified line of action, or a force-couple system (<u>one</u> force and <u>one</u> couple) applied at a specific point. When an original force system is replaced with a single resultant force, the resultant must have magnitude, direction and sense that would cause translational effects identical to those of the original system. The resultant's line of action must be located such that the single force will also produce rotation effects identical to those of the original system.

When replacing an original force system with a force-couple system (one force and one couple applied at a specific location), the single force must provide identical translational effects while the couple provides identical rotational effects.

<u>FURTHER EXAMPLE PROBLEMS</u> (solutions in GFSA format are on the following pages)

Example 7-5 Replace the force system shown below with an equivalent system at point A that consists of <u>one</u> force and <u>one</u> couple.

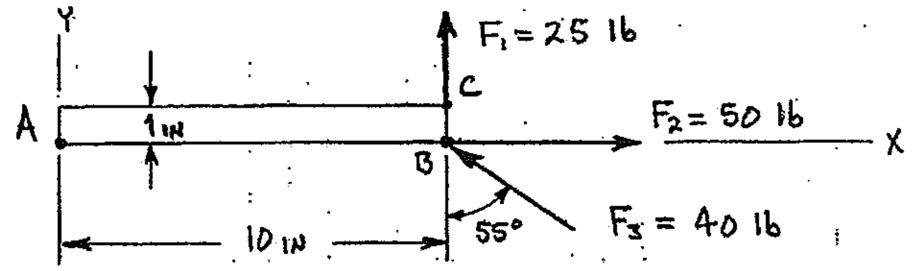

Example 7-6 Replace the force system shown below with a single resultant force. Determine the resultant's magnitude, direction, sense, and the location where its line of action crosses the horizontal axis.

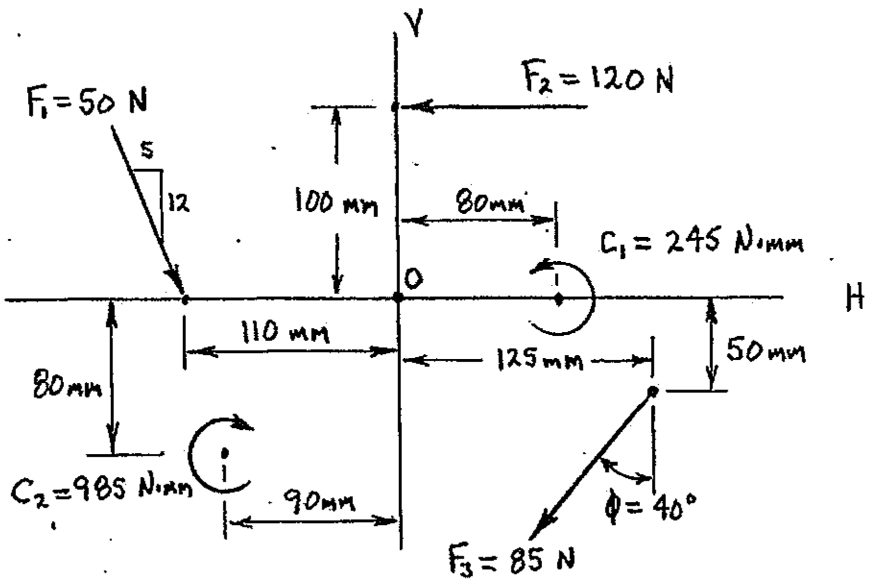

PROBLEM: EXAMPLE 7-5

GIVEN: FORCE SYSTEM APPLIED AS SHOWN BELOW.

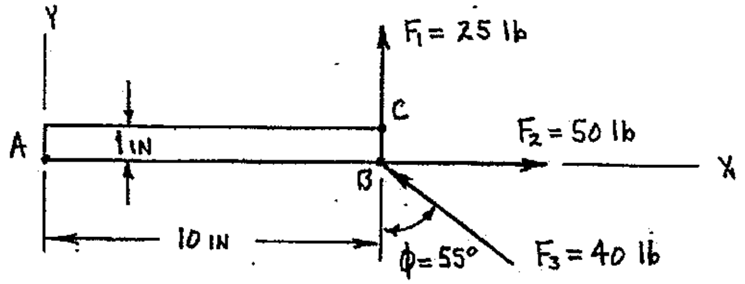

FIND: REPLACE THE FORCE SYSTEM SHOWN ABOVE WITH AN EQUIVALENT SYSTEM AT POINT A THAT CONSISTS OF ONE FORCE AND ONE COUPLE.

SOLUTION:

WORKING DIAGRAM #1:

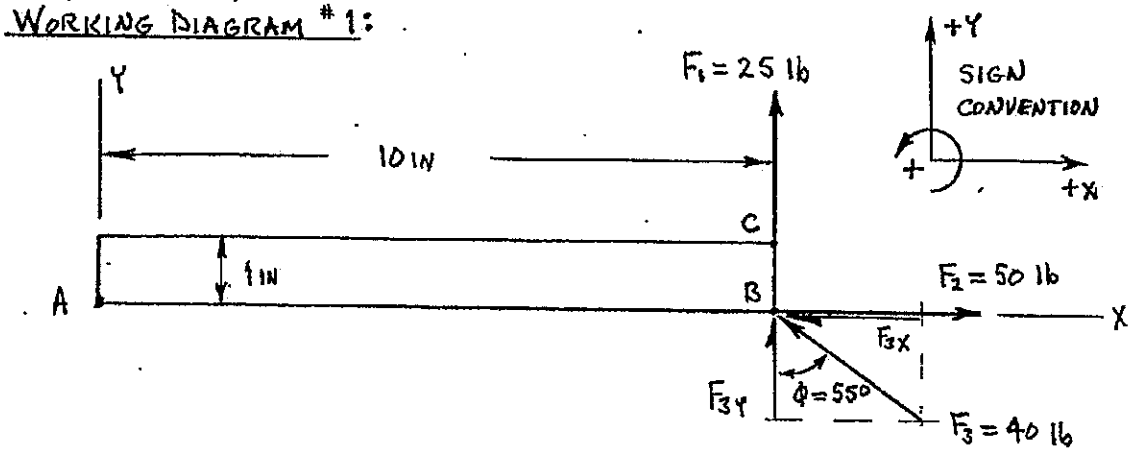

SOLVING FOR THE HORIZONTAL COMPONENT OF F_{NEW} ($F_{X\,NEW}$):

$F_{X\,NEW} = \Sigma F_{X\,OLD}$

$F_{X\,NEW} = \pm \cancel{F_{1X}}^{\,0} \pm F_{2X} \pm F_{3X}$

$F_{X\,NEW} = +F_2 - F_3 \sin 55°$

$F_{X\,NEW} = +50\text{ lb} - (40\text{ lb})(\sin 55°)$

$F_{X\,NEW} = +50\text{ lb} - 32.7661\text{ lb}$

$F_{X\,NEW} = +17.2339\text{ lb}$

$F_{X\,NEW} = \underline{\underline{17.2339\text{ lb}}} \longrightarrow$

CONT'D.

PROBLEM: EXAMPLE 7-5 (CONT'D.)

SOLVING FOR THE VERTICAL COMPONENT OF F_{NEW} ($F_{Y NEW}$):

$F_{Y NEW} = \Sigma F_{Y OLD}$

$F_{Y NEW} = \pm F_{1Y} \pm F_{2Y} \pm F_{3Y}$ (with F_{2Y} crossed out, = 0)

$F_{Y NEW} = +F_1 + F_3 \cos 55°$

$F_{Y NEW} = +25\text{ lb} + (40\text{ lb})(\cos 55°)$

$F_{Y NEW} = +25\text{ lb} + 22.9431\text{ lb}$

$F_{Y NEW} = +47.9431\text{ lb}$

$F_{Y NEW} = 47.9431\text{ lb} \uparrow$

SOLVING FOR THE NEW EQUIVALENT COUPLE, $C_{A NEW}$:

$C_{A NEW} = \Sigma M_{A OLD}$

$C_{A NEW} = \pm[(F_{1X})(d_\perp)] \pm [(F_{1Y})(d_\perp)] \pm [(F_{2X})(d_\perp)] \pm [(F_{2Y})(d_\perp)] \pm [(F_{3X})(d_\perp)] \pm [(F_{3Y})(d_\perp)]$ (the F_{1X}, F_{2X}, F_{2Y} and F_{3X} terms crossed out, = 0)

$C_{A NEW} = +[(F_1)(10\text{ in})] + [(F_3)(\cos 55°)(10\text{ in})]$

$C_{A NEW} = +[(25\text{ lb})(10\text{ in})] + [(40\text{ lb})(\cos 55°)(10\text{ in})]$

$C_{A NEW} = +250\text{ lb·in} + 229.431\text{ lb·in}$

$C_{A NEW} = +479.431\text{ lb·in}$

$C_{A NEW} = 479.431\text{ lb·in}$ ↺

WORKING DIAGRAM #2: (FORCE-COUPLE SYSTEM @ POINT A)

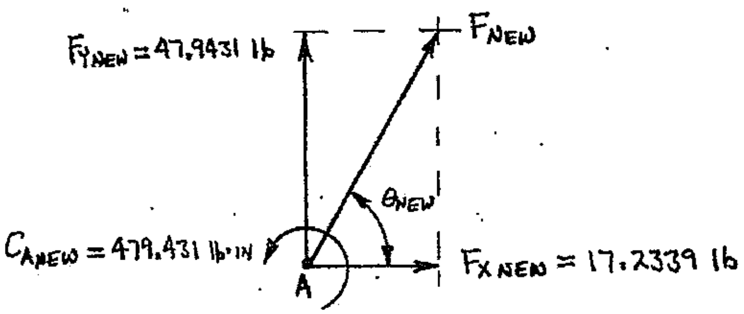

CONT'D.

PROBLEM: EXAMPLE 7-5 (CONT'D.)

MAGNITUDE OF F_{NEW}:

$$F_{NEW} = \sqrt{(F_{X\,NEW})^2 + (F_{Y\,NEW})^2}$$

$$F_{NEW} = \sqrt{(17.2339\text{ lb})^2 + (47.9431\text{ lb})^2}$$

$$F_{NEW} = \underline{\underline{50.9465\text{ lb}}}$$ (MAGNITUDE ONLY)

DIRECTION OF F_{NEW}:

$$\tan\theta_{NEW} = \frac{F_{Y\,NEW}}{F_{X\,NEW}}$$

$$\theta_{NEW} = \tan^{-1}\left(\frac{F_{Y\,NEW}}{F_{X\,NEW}}\right)$$

$$\theta_{NEW} = \tan^{-1}\left(\frac{47.9431\text{ lb}}{17.2339\text{ lb}}\right)$$

$$\theta_{NEW} = \underline{\underline{70.2282^\circ}}$$

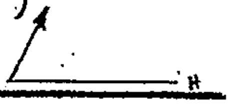

ANSWER:

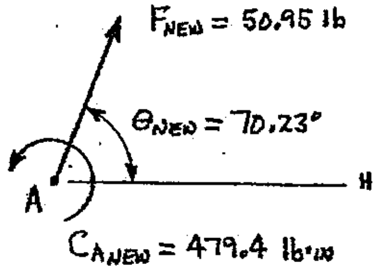

PROBLEM: EXAMPLE 7-6

GIVEN: FORCE SYSTEM SHOWN BELOW.

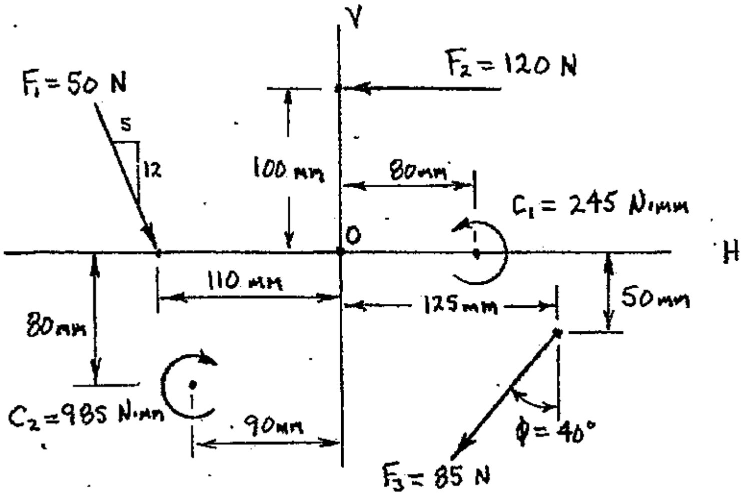

FIND: REPLACE THE FORCE SYSTEM SHOWN ABOVE WITH A SINGLE RESULTANT FORCE. DETERMINE THE RESULTANT'S MAGNITUDE, DIRECTION, SENSE AND THE THE LOCATION WHERE ITS LINE OF ACTION CROSSES THE HORIZONTAL AXIS.

SOLUTION:

WORKING DIAGRAM:

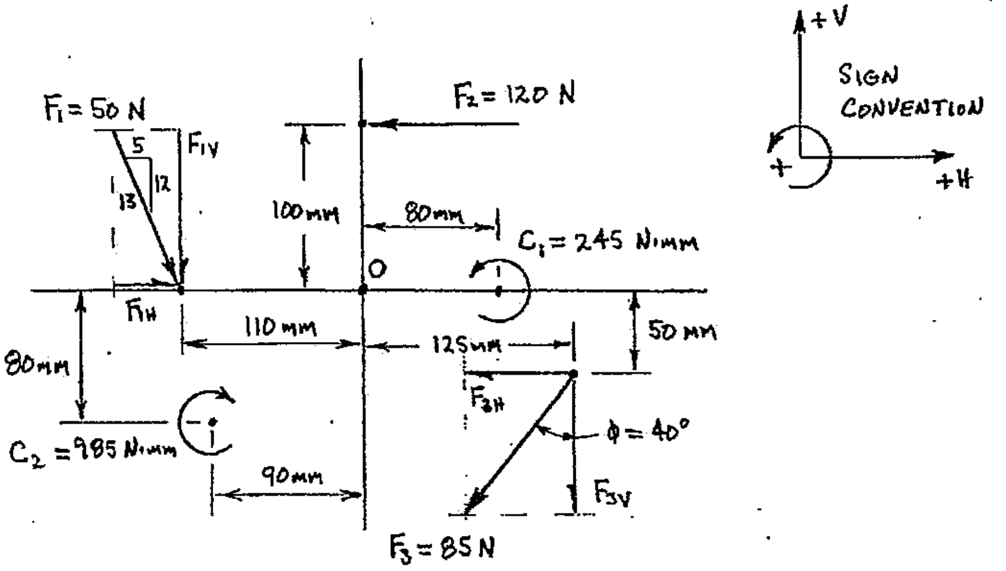

CONT'D.

PROBLEM: EXAMPLE 7-6 (CONT'D.)

SOLVING FOR THE H-COMPONENT OF F_{NEW}:

$$F_{H\,NEW} = \Sigma F_{H\,OLD}$$

$$F_{H\,NEW} = \pm F_{1H} \pm F_{2H} \pm F_{3H}$$

$$F_{H\,NEW} = +(5/13)F_1 - F_2 - (F_3)\sin 40°$$

$$F_{H\,NEW} = +(5/13)(50\,N) - 120\,N - (85\,N)(\sin 40°)$$

$$F_{H\,NEW} = +19.2308\,N - 120\,N - 54.6369\,N$$

$$F_{H\,NEW} = -155.406\,N$$

$$F_{H\,NEW} = 155.406\,N \leftarrow$$

SOLVING FOR THE V-COMPONENT OF F_{NEW}:

$$F_{V\,NEW} = \Sigma F_{V\,OLD}$$

$$F_{V\,NEW} = \pm F_{1V} \pm F_{2V} \pm F_{3V} \quad (F_{2V} = 0)$$

$$F_{V\,NEW} = -(12/13)F_1 - (F_3)\cos 40°$$

$$F_{V\,NEW} = -(12/13)(50\,N) - (85\,N)(\cos 40°)$$

$$F_{V\,NEW} = -46.1538\,N - 65.1138\,N$$

$$F_{V\,NEW} = -111.268\,N$$

$$F_{V\,NEW} = 111.268\,N \downarrow$$

WORKING DIAGRAM #2: (FOR F_{NEW} + θ_{NEW})

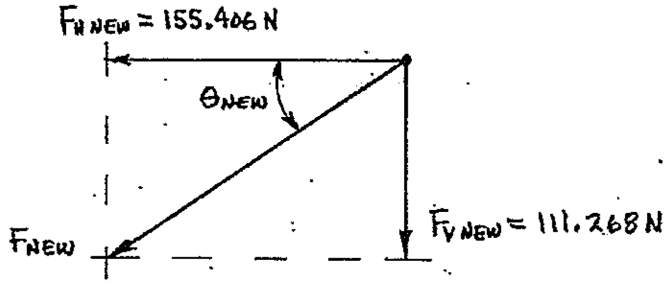

CONT'D.

PROBLEM: EXAMPLE 7-6 (CONT'D.)

SOLVING FOR F_{NEW} AND θ_{NEW}:

$$F_{NEW} = \sqrt{(F_{H\,NEW})^2 + (F_{V\,NEW})^2}$$

$$F_{NEW} = \sqrt{(155.406\text{ N})^2 + (111.268\text{ N})^2}$$

$$F_{NEW} = \underline{191.132\text{ N}} \quad \text{(MAGNITUDE ONLY)}$$

$$\theta_{NEW} = \tan^{-1}\left(\frac{F_{V\,NEW}}{F_{H\,NEW}}\right)$$

$$\theta_{NEW} = \tan^{-1}\left(\frac{111.268\text{ N}}{155.406\text{ N}}\right)$$

$$\theta_{NEW} = \underline{\underline{35.6020^\circ}}$$

SOLVING FOR THE MOMENT ($M_{O\,NEW}$) THAT MUST BE PRODUCED BY F_{NEW} ABOUT PT. O:

$$M_{O\,NEW} = \Sigma M_{O\,OLD}$$

$$M_{O\,NEW} = \pm[(F_{1H})(d\perp)] \pm [(F_{1V})(d\perp)] \pm [(F_{2H})(d\perp)] \pm [(F_{3V})(d\perp)] \pm [(F_{3H})(d\perp)] \pm [(F_{2V})(d\perp)] \pm C_1 \pm C_2$$

(The $[(F_{1H})(d\perp)]$ and $[(F_{3V})(d\perp)]$ terms are crossed out, marked 0.)

$$M_{O\,NEW} = +[(12/13)(F_1)(110\text{ mm})] + [(F_2)(100\text{ mm})] - [(F_3 \sin 40^\circ)(50\text{ mm})] - [(F_3 \cos 40^\circ)(125\text{ mm})] + C_1 - C_2$$

$$M_{O\,NEW} = +[(12/13)(50\text{ N})(110\text{ mm})] + [(120\text{ N})(100\text{ mm})] - [(85\text{ N})(\sin 40^\circ)(50\text{ mm})] - [(85\text{ N})(\cos 40^\circ)(125\text{ mm})] + 245\text{ N}\cdot\text{mm} - 985\text{ N}\cdot\text{mm}$$

$$M_{O\,NEW} = +5076.92\text{ N}\cdot\text{mm} + 12{,}000\text{ N}\cdot\text{mm} - 2731.85\text{ N}\cdot\text{mm} - 8139.22\text{ N}\cdot\text{mm} + 245\text{ N}\cdot\text{mm} - 985\text{ N}\cdot\text{mm}$$

$$M_{O\,NEW} = +5465.85\text{ N}\cdot\text{mm}$$

$$M_{O\,NEW} = \underline{\underline{5465.85\text{ N}\cdot\text{mm}}}$$

CONT'D.

PROBLEM: EXAMPLE 7-6 (CONT'D.)

$F_{NEW} = 191.132 \text{ N}$

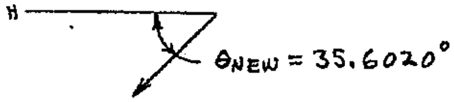

$M_{O_{NEW}} = 5465.85 \text{ N·mm}$ ↺

F_{NEW} MUST CROSS THE HORIZONTAL AXIS TO THE LEFT OF POINT O TO PRODUCE A MOMENT WITH COUNTERCLOCKWISE SENSE (SAME SENSE AS $M_{O\,NEW}$)

WORKING DIAGRAM #3: (TO LOCATE F_{NEW}'s LINE OF ACTION)

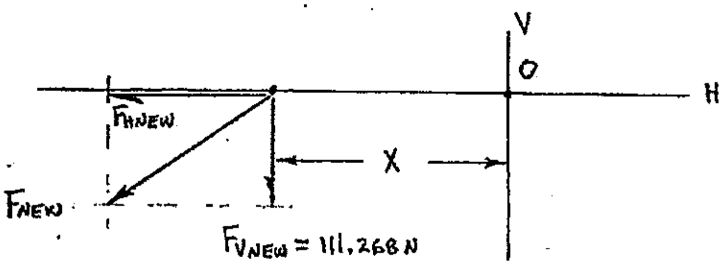

SOLVING FOR DISTANCE X: ($d\perp$ OF $F_{V\,NEW}$)

$$\pm M_{O_{NEW}} = \pm\left[(F_{H_{NEW}})(\cancel{d\perp})^{0}\right] \pm \left[(F_{V_{NEW}})(d\perp)\right]$$

$$+M_{O\,NEW} = +\left[(F_{V\,NEW})(x)\right]$$

$$X = \frac{+M_{O\,NEW}}{+F_{V\,NEW}}$$

$$X = \frac{+5465.85 \text{ N·mm}}{+111.268 \text{ N}}$$

$$X = \underline{49.1233 \text{ mm}}$$

ANSWER:

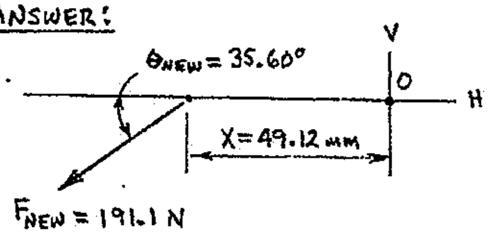

PRACTICE PROBLEMS

7.1 A roof truss has forces applied as shown below. Replace the original force system with an equivalent force system that consists of one force and one couple applied at point D.

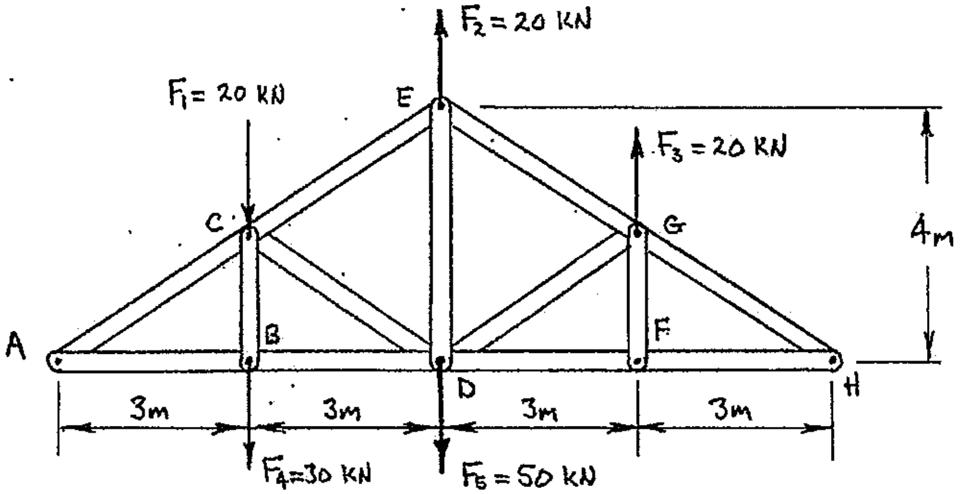

7.2 Replace the force system shown below with an equivalent force system that consists of one force and one couple applied at point O.

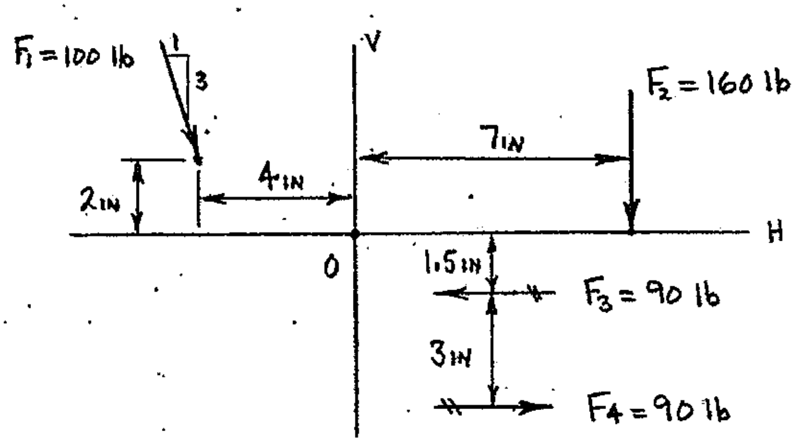

PRACTICE PROBLEMS

7.3 A roof truss has forces applied as shown below. Replace the original force system with a single resultant force. Specify the resultant's magnitude, direction, sense, and identify the location where the resultant's line of action crosses the lower chord between A and H. Specify this location as a horizontal distance from point A.

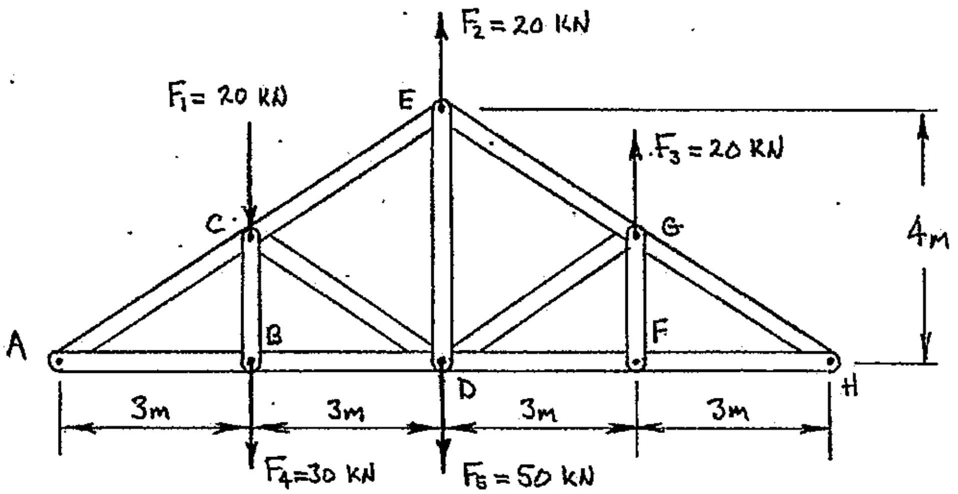

7.4 A bridge truss has forces applied as shown below. Replace the original force system with a single resultant force and specify the resultant's magnitude, direction, sense, and identify the location where the resultant's line of action crosses a horizontal line that contains points A and H. Specify this location as a horizontal distance from point A.

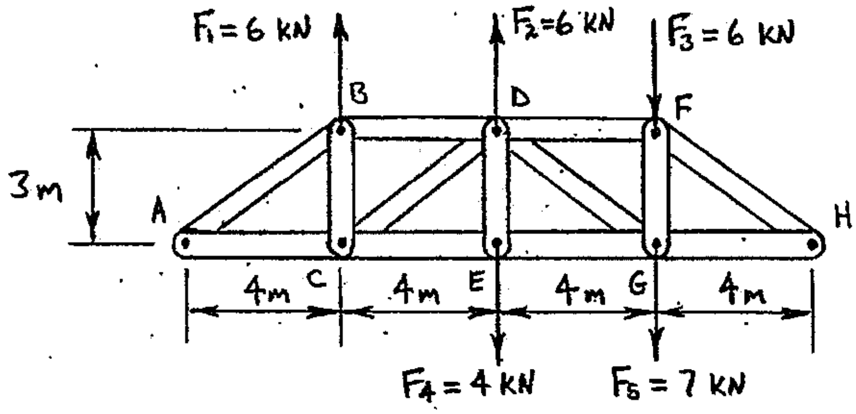

PRACTICE PROBLEMS

7.5 A force system (forces and couples) is applied to a rectangular plate as shown below. Replace the original force system with a single resultant force (lb). Determine the resultant's magnitude, direction, sense and point of application. Specify the point of application as a horizontal distance from point D.

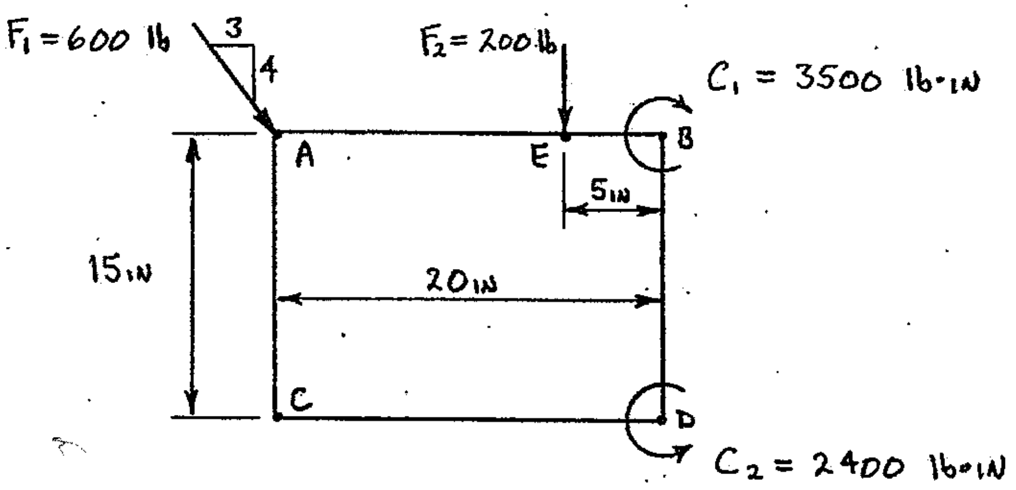

7.6 A force system is applied to a bracket as shown below. Replace the original force system with a force-couple system (one force and one couple) applied at point A.

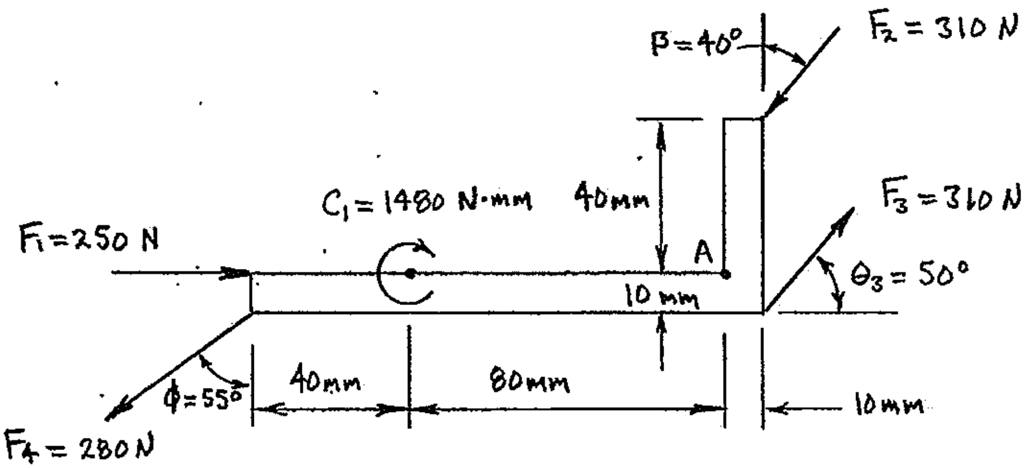

PRACTICE PROBLEMS

7.7 A force-couple system is applied to an object as shown below. Replace the original system with an equivalent force-couple system (one force and one couple) applied at point A.

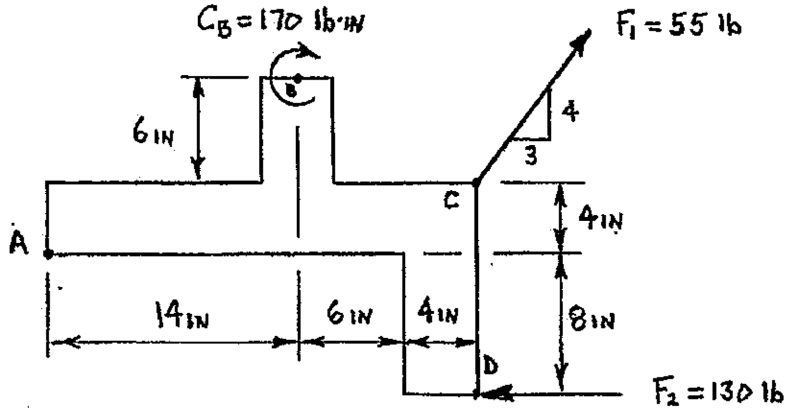

7.8 Four forces act on a 28" X 15" plate as shown below. Replace the four original forces with a single equivalent force, and determine the locations of the points where the line of action of the single equivalent force intersects the edges of the plate. Use a diagram of the plate as your final answer (show the magnitude, direction, and sense of the equivalent force and the locations where its line of action intersects the edges of the plate).

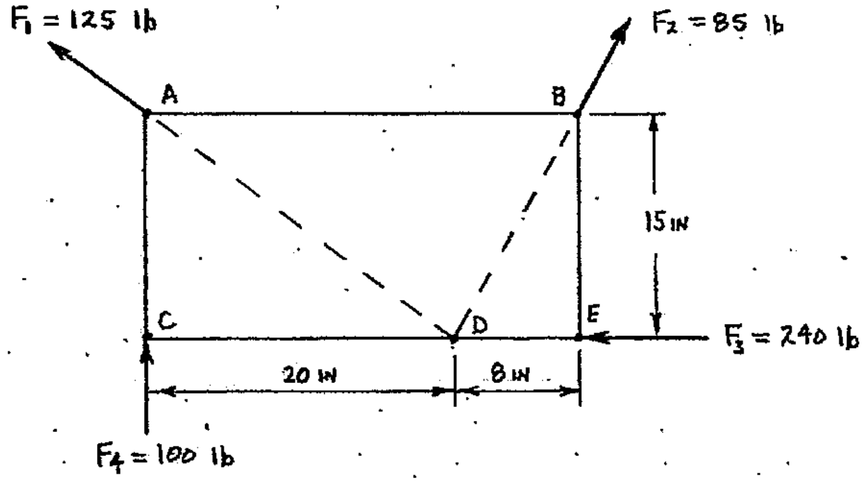

Chapter 8: SUPPORT REACTIONS AND FREE BODY DIAGRAMS

The term "support" can mean to bear weight, to maintain position, to hold up, or to withstand. In engineering mechanics, supports are normally locations where an object is connected to something that will allow the object to remain in a fixed position even when acted upon by some type of force system. In a wood framed house, the floor decking is "supported" by the floor joists. The floor joists are beams whose ends are "supported" by the sill plates; the sill plates are "supported" by the foundation, and finally earth "supports" the foundation.

Reactions occur at locations on an object where the object is connected to some type of support. All objects are assumed to be rigid bodies when studying statics, so the object essentially just transfers any applied loads (forces or couples) from their points of application to the support locations. Reactions that develop at the support locations are called ***support reactions*** (or just sometimes just reactions).

When drawing an "initial working diagram" for an object that is in static equilibrium, the support reactions (forces and/or couples) must be shown on the diagram along with the initial force system that acts on the object. Support reactions are shown at each location where the object was originally connected to some type of support. A diagram that includes all of the acting influences and all reactions required for static equilibrium is called a ***free body diagram*** **(FBD)**. The term free body diagram describes a diagram of an object that has been "cut free" at any supports, so the supports are NOT shown in the free body diagram. However, the effects of the supports must be modeled (drawn/shown) on the FBD by some combination of forces and/or couples, based on the type of support that was originally connected at each support location.

A free body diagram can be an entire object, or any portion of an object. For example, an entire bridge could be used as the object in a free body diagram where the bridge has been "cut away" from its supports. The object could also be just one side of the bridge (one truss), or just one member of the bridge truss, or just one pin at the end of a truss member. Deciding exactly what to draw as the "object" in a free body diagram is sometimes one of the most difficult steps in a static equilibrium problem solution.

TYPES OF SUPPORTS

Many different type of supports can be defined, both for two-dimensional and three-dimensional force systems. Only the common supports for two-dimensional systems will be presented in this chapter.

One of the simplest types of support is the "smooth surface". A smooth surface is defined as a surface that provides no friction. A frictionless surface is not really possible, however sometimes the friction force is so small compared to all other forces in the system that for practical purposes a support surface could be considered to be a "smooth surface". A smooth surface support prevents translation (linear movement) only in a direction perpendicular to the smooth surface. So, a smooth surface can

provide only a single reaction force with a known line of action (perpendicular to the smooth support surface). A smooth surface is modeled as a single reaction force with a known line of action that is perpendicular to the smooth surface (no matter what the orientation of the smooth surface), as shown in Figure 8-1.

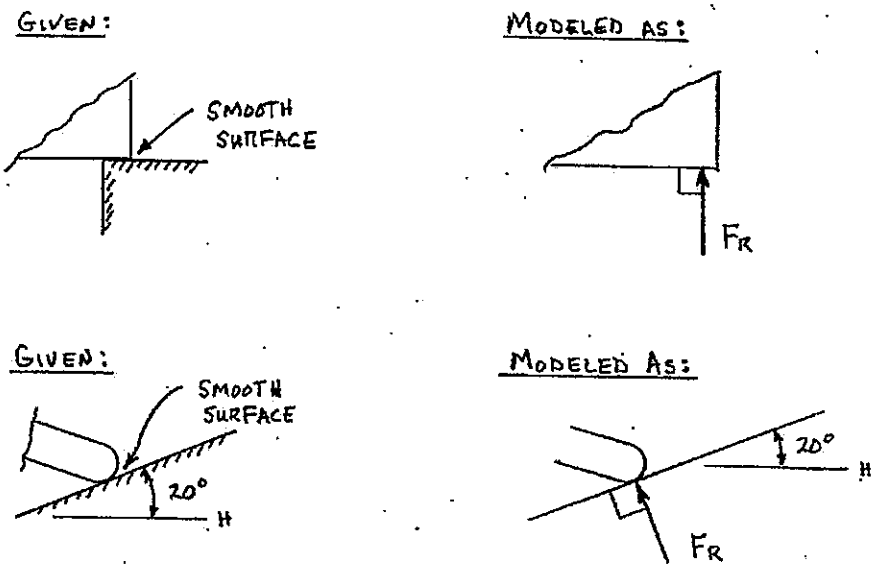

FIGURE 8-1 Smooth surface supports

A roller support is similar to a smooth surface in that it can only provide support (prevent translation) in a direction perpendicular to the surface being rolled across. A roller support is modeled as a single reaction force with a known line of action that is perpendicular to the surface being rolled across, as shown in Figure 8-2.

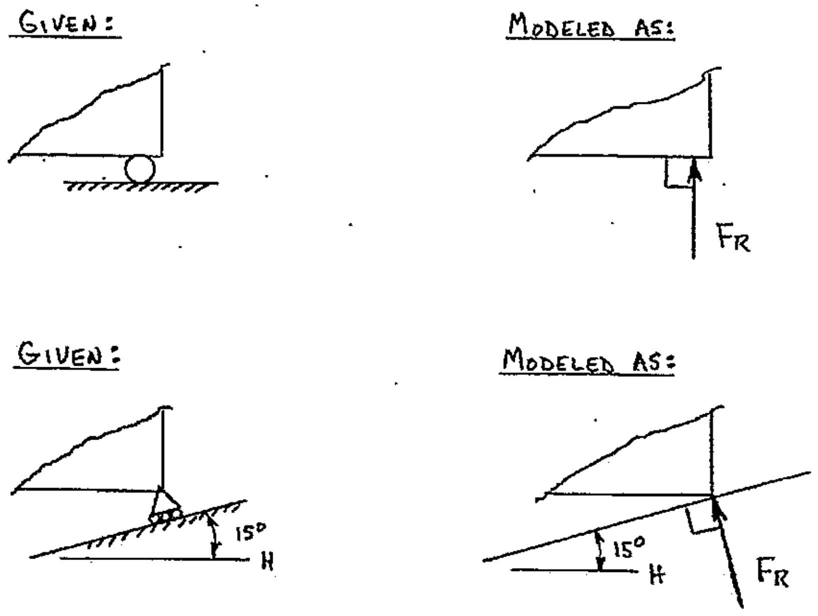

FIGURE 8-2 Roller supports

Objects are sometimes supported by cables or ropes. A cable can only provide support when it is in tension, so a cable support provides a single reaction force with a known direction (the same as the cable's given orientation) and known sense (always *pulling* on the object). Force is assumed to travel undiminished along a cable, even if the cable goes around a pulley and changes direction. A cable (or rope, chain, etc.) support is modeled as a single reaction force with known line of action and known sense (pulling on the support location), as shown in Figure 8-3.

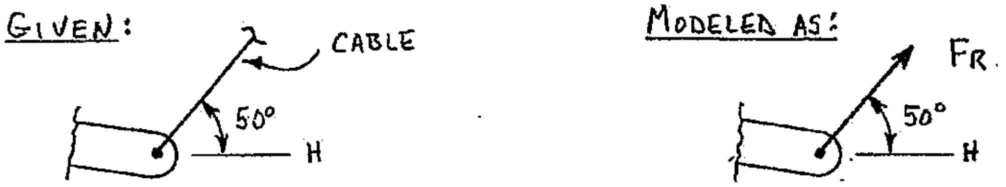

FIGURE 8-3 Cable support

A pin support (or hinge support) is another type of two-dimensional support common in engineering mechanics. A pin prevents translation in any direction, so a pin will provide a single reaction force with a ***specific, but unknown***, line of action. Thus, if a pin support were modeled as a single reaction force, the magnitude, direction and sense of the reaction would all be unknown. Consequently, a pin support is normally modeled as the two perpendicular components of the single reaction force. Then, if the single reaction force at the pin is required, it can be found by calculating the resultant of its two perpendicular reaction components. Pin supports are modeled as shown in Figure 8-4. Unless instructed otherwise, ALWAYS model a pin support as two perpendicular components, HORIZONTAL and VERTICAL, regardless of the angle of attachment for the pin support.

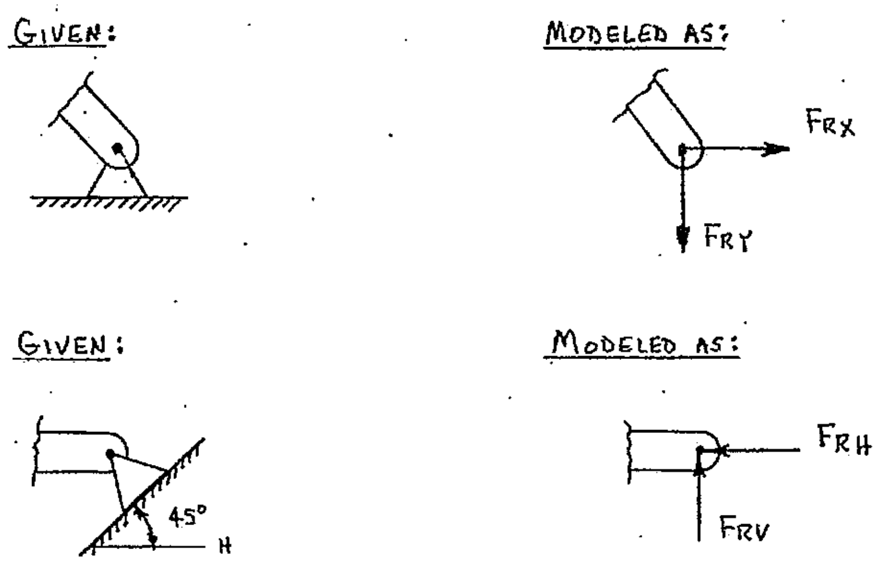

FIGURE 8-4 Pin (or hinge) supports

A fixed support is the result of solidly attaching an object to a support location so that all movement is prevented at the support (the object can not move linearly in any direction, and can not rotate about the support). Fixed supports can be made by welding or bonding objects together. Some bolted connections that allow no rotation are also considered to be fixed supports. A fixed support could also result from setting the base of a light pole or flagpole deep in concrete and allowing the concrete to harden. A fixed support is modeled by two perpendicular reaction force components and a couple, as shown in Figure 8-5. Fixed supports are sometimes called moment connections, due to the reaction couple that prevents any rotation at the connection. If the support surface is vertical (as seen in the top section of Figure 8-5), the fixed support is normally called a cantilever support (or just cantilever).

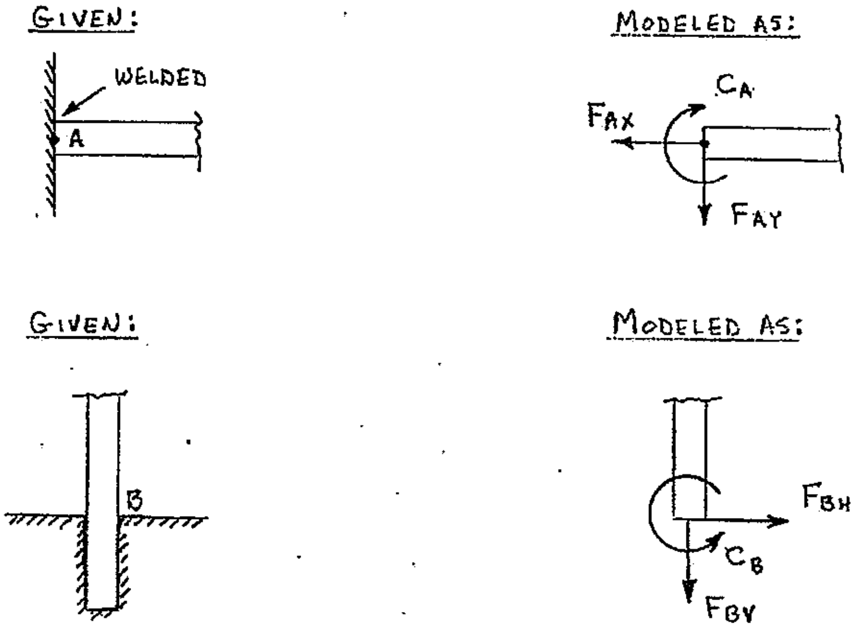

Figure 8-5 Fixed supports

<u>FREE BODY DIAGRAMS</u>

Any solution used to determine support reactions begins with a free body diagram (FBD). The FBD must include a title, the analytical diagram and the sign convention. The title for a free body diagram must be descriptive (i.e., FBD of the beam, FBD of the plate, etc.). The analytical diagram must include a sketch of the object, any loads (forces and/or couples) acting on the object, all support reactions, and all dimensions and notation required for the mathematical equilibrium solution. Each unknown force's line of action must be extended, and the intersection points of the extended lines of action identified and located. The FBD must be <u>correct</u>; supports correctly modeled, all acting influences applied correctly, and all dimensions shown and/or calculated correctly. The mathematical equilibrium solution is a model of the FBD, so ***if the FBD is incorrect the mathematical solution will also be incorrect***.

Learning to develop correct free body diagrams is a skill that requires practice. The following examples show how to develop free body diagrams for several common loading and support conditions. Dimensions have not been shown in Examples 8-1 through 8-4 so that the support reactions (the model of each support) can be seen more clearly. If a free body diagram is to be used to actually solve for the support reactions, then all relevant dimensions must be included on the free body diagram.

Example 8-1 The beam shown below rests on a smooth surface at point A and is pinned at point B. Develop a free body diagram of the beam.

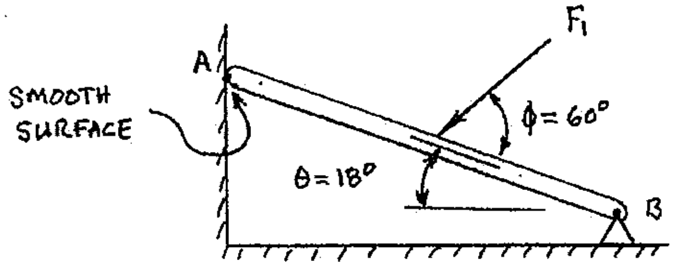

The smooth surface at point A is modeled as a single reaction force with a horizontal line of action (its line of action must be perpendicular to the vertical support surface). The pin connection at B is modeled by a pair of perpendicular components (vertical and horizontal). The unknown forces' lines of action intersect at two points (points B and C).

FBD OF BEAM AB:

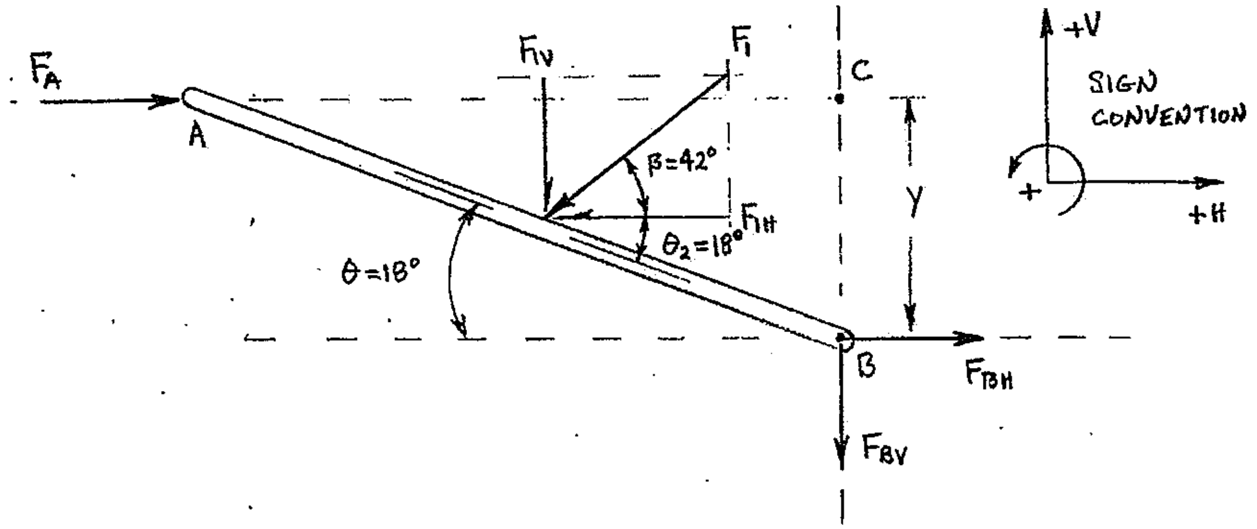

Example 8-2: A horizontal bar is supported by a pin at C and a cable that extends from A to B. Develop a free body diagram of the bar.

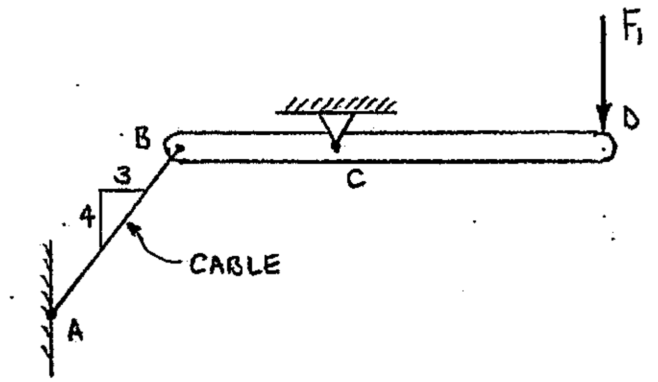

The cable attached at Point B is modeled as a single reaction force with a known line of action (same as cable's original direction) and known sense (pulling on point B). The pin support at C is modeled as a pair of perpendicular components (vertical and horizontal). The unknown forces' lines of action intersect at three points (B, C and E). Note that the components of cable reaction F_B are not shown at this time, since you must extend the only line of action of F_B (not F_B's components).

<u>FBD OF HORIZONTAL BAR:</u>

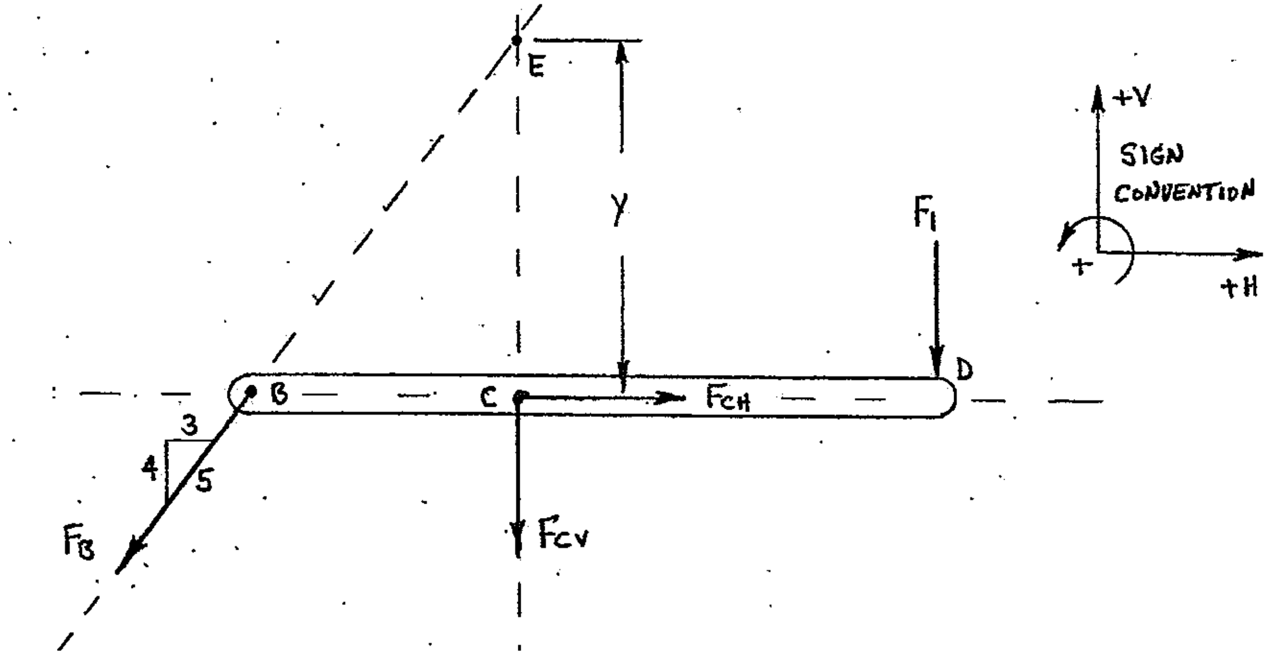

Example 8-3: The bracket shown below is supported by a pin at B and a roller at D. Develop a free body diagram of the bracket.

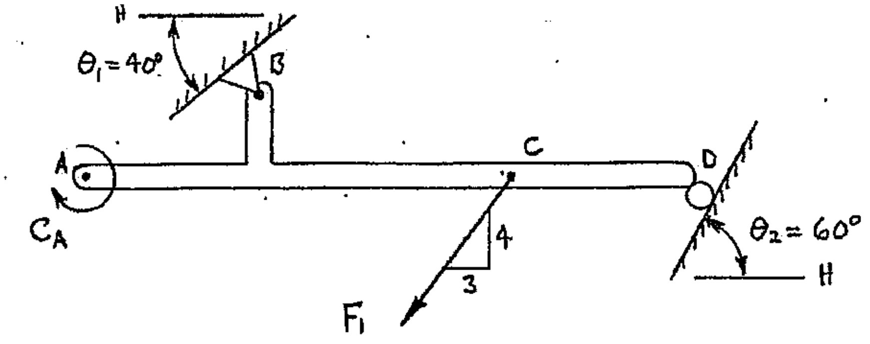

The pin at B is modeled as a pair of perpendicular components, and the components at a pin are always modeled as vertical and horizontal, regardless of the orientation of the support surface where the pin is attached. The roller at point D is modeled as a single reaction force with a known line of action that is perpendicular to the surface being rolled across. The unknown forces' lines of action intersect at three points B, E and G). Note that the components of roller reaction F_D are not shown at this time, since you must extend the only line of action of F_D (not F_D's components).

FBD OF BRACKET:

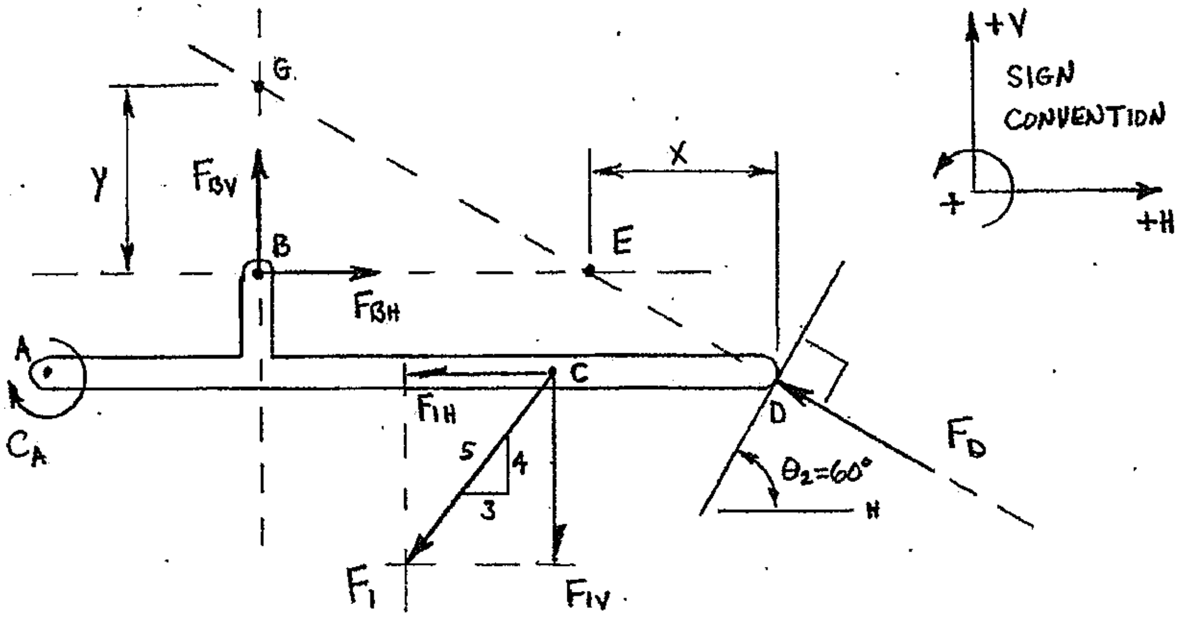

Example 8-4: A cantilever bracket is loaded as shown below. Develop a free body diagram of the bracket.

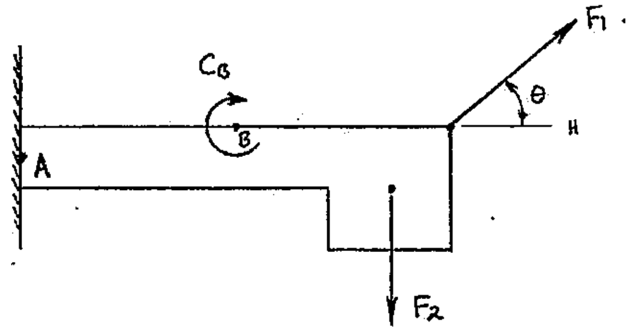

The fixed support at point A is modeled as a pair of perpendicular components (horizontal and vertical) and a couple. The unknown forces' lines of action intersect at only one point (point A).

FBD OF CANTILEVER BRACKET:

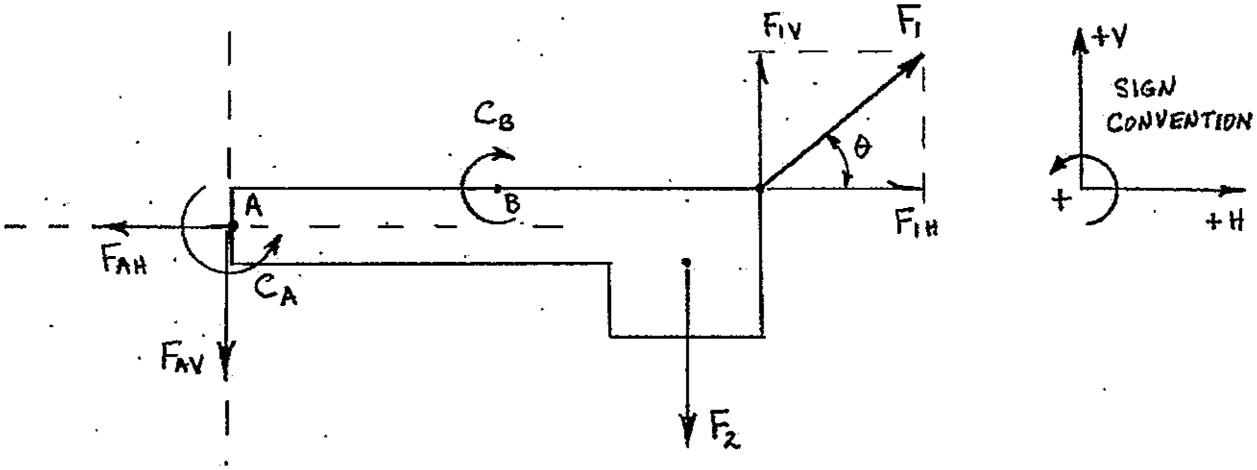

EQUILIBRIUM ANALYSIS TABLE

An equilibrium analysis table for the object shown in a free body diagram is constructed directly after the free body diagram. The purpose of the equilibrium analysis table is to determine which equilibrium equation will be used to solve for each unknown support reaction, and also to determine which equilibrium equation(s) will be used to verify the solution. The equilibrium analysis table also allows the user to establish an "order of solution" for the mathematical work that is required to determine the support reactions.

FBD OF BRACKET:

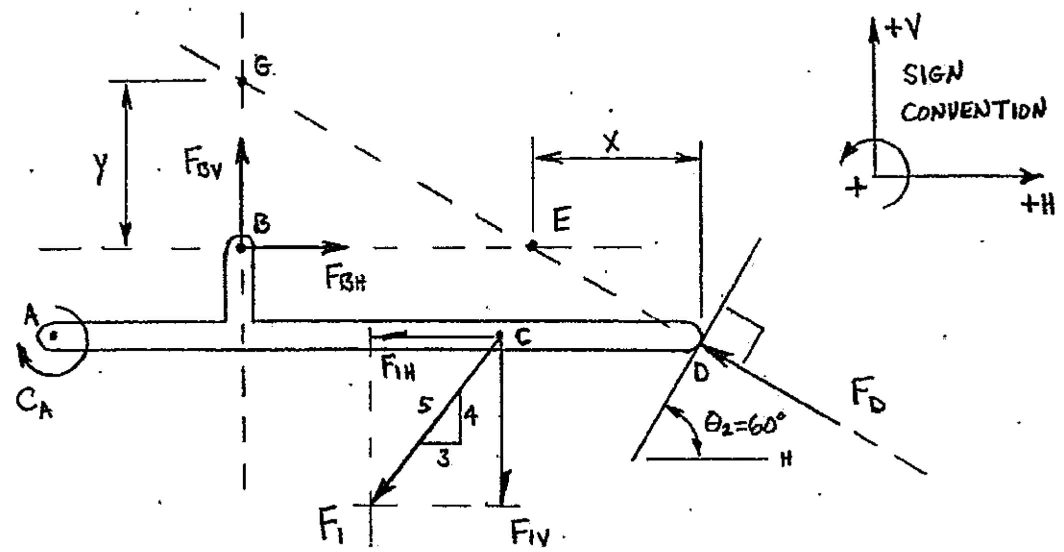

FIGURE 8-6 FBD of bracket (from Example 8-3)

An equilibrium analysis table will be developed for the free body diagram shown above in Figure 8-6. The top row of the equilibrium analysis table contains the column headings. The column labeled "Principle" is for equilibrium equations. Write a moment equilibrium equation ($\Sigma M_P = 0$) for each and every point where unknown forces' lines of action intersect, one equation per row, before writing any force equilibrium equations. For the FBD shown above, moment equilibrium equations can be written for points B, E and G (see table below). Next, determine how many unknowns (forces and couples) would be in each equation. When evaluating the equilibrium equation shown in row 1 ($\Sigma M_B = 0$), unknown forces F_{BH} and F_{BV} have moment arms equal to zero about point B. So, F_D is the only unknown when solving $\Sigma M_B = 0$ and F_D is shown under the "Unknowns" heading in row 1. Any equation that has only a single unknown can be solved directly, and this is the action stated in row 1 under the "Action" heading. The first three equilibrium equations and first row now appear as follows (the "Order of Solution" will be established only after the rest of the table has been completed):

Equilibrium Analysis Table for FBD of Bracket: (partial)

	Principle	Unknowns	Action	Order of Solution
1	$\Sigma M_B = 0$	F_D	Solve for F_D using $\Sigma M_B = 0$	
2	$\Sigma M_E = 0$	F_{BV}		
3	$\Sigma M_G = 0$	F_{BH}		

The unknowns and actions for rows 2 and 3 were established similarly to those in row 1, and are shown below. Force equilibrium equations are included in the table only after moment equilibrium equations have been established for each of the points where unknown forces' lines of action intersect.

Equilibrium Analysis Table for FBD of Bracket: (partial)

	Principle	Unknowns	Action	Order of Solution
1	$\Sigma M_B = 0$	F_D	Solve for F_D using $\Sigma M_B = 0$	
2	$\Sigma M_E = 0$	F_{BV}	Solve for F_{BV} using $\Sigma M_E = 0$	
3	$\Sigma M_G = 0$	F_{BH}	Solve for F_{BH} using $\Sigma M_G = 0$	
4	$\Sigma F_H = 0$			
5	$\Sigma F_V = 0$			

The unknowns for each force equilibrium equation are based on the fact that NONE of the support reactions are known at this time (no equilibrium equations have been solved yet). Each force equilibrium equation has two unknowns, and can not be solved individually. The two force equilibriums have a total of three unknowns, so the two equations can not be solved simultaneously. However, the force equilibrium equations can (and will) be used to verify the mathematical solution after values have been calculated for the three support reactions (F_{BH}, F_{BV} and F_D).

Note that the vertical and horizontal components of reaction force F_D are not shown in the table's "Unknowns" column. The components of F_D may (and probably will) be used in the mathematical solution, but only the single reaction force (for a roller, cable or smooth surface) is shown in the equilibrium analysis table; this keeps the number of unknowns to a minimum.

Equilibrium Analysis Table for FBD of Bracket: (partial)

	Principle	Unknowns	Action	Order of Solution
1	$\Sigma M_B = 0$	F_D	Solve for F_D using $\Sigma M_B = 0$	
2	$\Sigma M_E = 0$	F_{BV}	Solve for F_{BV} using $\Sigma M_E = 0$	
3	$\Sigma M_G = 0$	F_{BH}	Solve for F_{BH} using $\Sigma M_G = 0$	
4	$\Sigma F_H = 0$	F_{BH}, F_D	None at this time	
5	$\Sigma F_V = 0$	F_{BV}, F_D	None at this time	

The "Order of Solution" is the final item that must be completed in the equilibrium analysis table. The three independent equations (shown in the first three rows) can be solved in any order; an order is chosen and that same order is then followed in the mathematical solution. Verification of the solution with one (or both) of the force equilibrium equations would be the last step in the problem solution.

The equilibrium analysis table is normally shown directly below the free body diagram. The free body diagram and the completed equilibrium analysis table are shown on the next page.

FBD OF BRACKET:

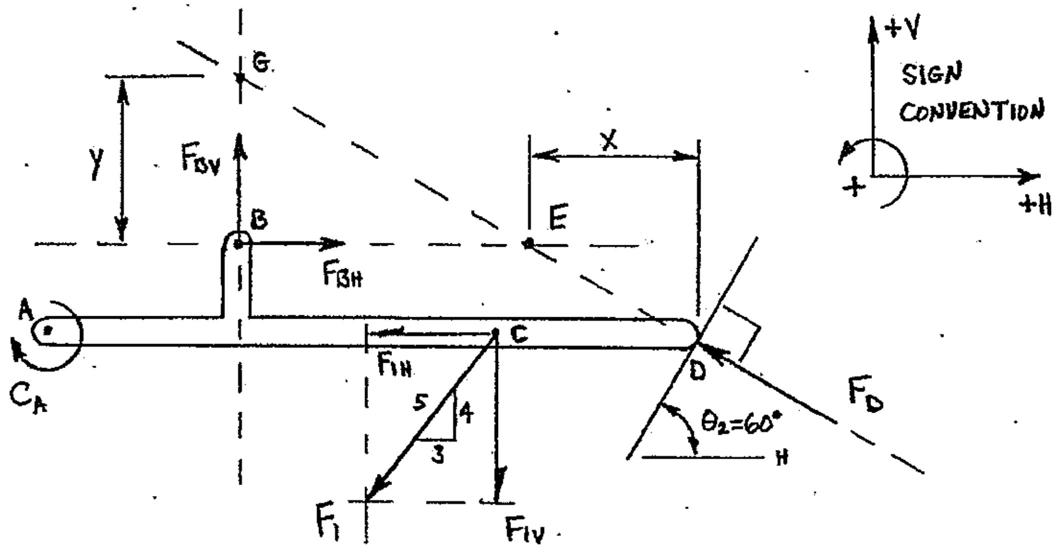

Equilibrium Analysis Table for FBD of Bracket: (complete)

	Principle	Unknowns	Action	Order of Solution
1	$\Sigma M_B = 0$	F_D	Solve for F_D using $\Sigma M_B = 0$	1
2	$\Sigma M_E = 0$	F_{BV}	Solve for F_{BV} using $\Sigma M_E = 0$	2
3	$\Sigma M_G = 0$	F_{BH}	Solve for F_{BH} using $\Sigma M_G = 0$	3
4	$\Sigma F_H = 0$	F_{BH}, F_D	None at this time	4 (verify solution)
5	$\Sigma F_V = 0$	F_{BV}, F_D	None at this time	5 (verify solution)

SOLUTION PROCEDURE FOR STATIC EQUILIBRIUM PROBLEMS

A general solution procedure for support reaction problems is shown below. Each support reaction problem is unique, and sometimes there may be several different ways to solve for the support reactions. However, the general procedure outlined below should help to define a consistent solution methodology.

General Solution Procedure for Static Equilibrium and Support Reactions:

1. Construct a free body diagram of the object (must always work from a FBD).
   a. Include all acting influences (forces and/or couples)
   b. Do NOT show the supports on the FBD. Instead, correctly model all reactions (forces and/or couples) at any locations where the object has been disconnected from a support.
   c. ***Assume*** a sense (push or pull) for all reaction forces.
   d. ***Assume*** a sense (↺ or ↻) for all reaction couples.
   e. Do NOT show the perpendicular components of the unknown forces at this time.

f. Extend the lines of action for each of the UNKNOWN forces (extend the line outward from both the arrowhead and tail of the force vector). Do NOT extend the lines of action for any known forces.
g. Locate and label (if not already labeled) the intersections of the extended lines of action. Label the intersection points with letters.
h. Include all dimensions, angles, etc. that will be required in the numerical solution.
i. Establish and show a sign convention.

2. Develop an equilibrium analysis table directly below the free body diagram.
   a. Begin the equilibrium analysis table by defining a moment equilibrium equation for a location where two unknown force's lines of action intersect. Determine the unknowns in this equation and the action required.
   b. Continue the next rows in the table as described above until a moment equilibrium equation has been established for every intersection point of unknown forces' lines of action.
   c. Define force equilibrium equations in two directions (normally horizontal and vertical), and determine the unknowns and actions for these equations.
   d. Establish an "order of solution" in the last (right-hand) column of the equilibrium analysis table.
   e. Return to the FBD and add any dimensions that need to be determined for use in the equilibrium equations identified above. Perpendicular components can now be added to the FBD if they are to be used in the mathematical solution.

3. Develop and solve the equilibrium equations identified in the equilibrium analysis table following the order of solution (shown in the table) to determine the unknown support reactions.
   a. Use the sign convention shown with the FBD to assign a positive (+) or negative (-) to each force or moment (actions and reactions) in the equilibrium equations. Base the signs (+ or -) given to any unknown reactions on the ASSUMED sense shown on the FBD.
   b. If the calculated value of a reaction is negative (-), the negative symbol indicates that the actual sense of the reaction is **opposite to** the assumed sense shown on the FBD.
   c. If the calculated value of a reaction is positive (+), the positive symbol indicates that the actual sense of the reaction **agrees with** the assumed sense shown on the FBD.

4. Perform at least one calculation to verify the solution values
   a. Substitute the appropriate values for calculated support reactions into any equilibrium equations that were NOT used to develop the values.
   b. You must remember to substitute the entire numerical answer (including the + or – sign) for each calculated support reaction when performing a verification calculation.

The solution procedure outline on the previous pages will be used to solve for the support reactions in Example 8-5 as shown below.

Example 8-5 The object shown below is supported by a pin at point A and a roller at point B. Calculate the support reactions at points A and B.

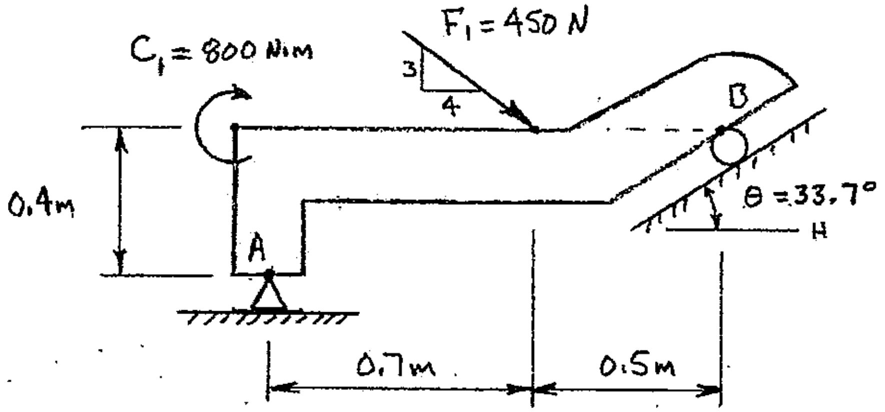

A free body diagram must be developed for the object. Drawing free body diagrams that are too small is a common mistake when learning how to solve static equilibrium problems. Since all of the information required for the numerical solution must be shown on the free body diagram, a LARGE FBD is necessary to clearly show all of the relevant information.

The pin support at point A is modeled as a pair of perpendicular components (horizontal and vertical), as shown on the free body diagram (following page). The roller support at point B is modeled as a single resultant force with a known line of action that is perpendicular to the surface being rolled across. Extending the lines of action of the unknown reaction forces at points A and B leads to three locations where the lines of action intersect; these points are labeled as A, C and D on the free body diagram. The locations for points C and D will need to be established for use in the equilibrium equations. A sign convention has been establish and included with the free body diagram.

The equilibrium analysis table is shown directly after the free body diagram, and is developed from the free body diagram. The free body diagram and the equilibrium analysis table are both shown on the following page.

cont'd.

Example 8-5: (cont'd.)

FBD of object AB:

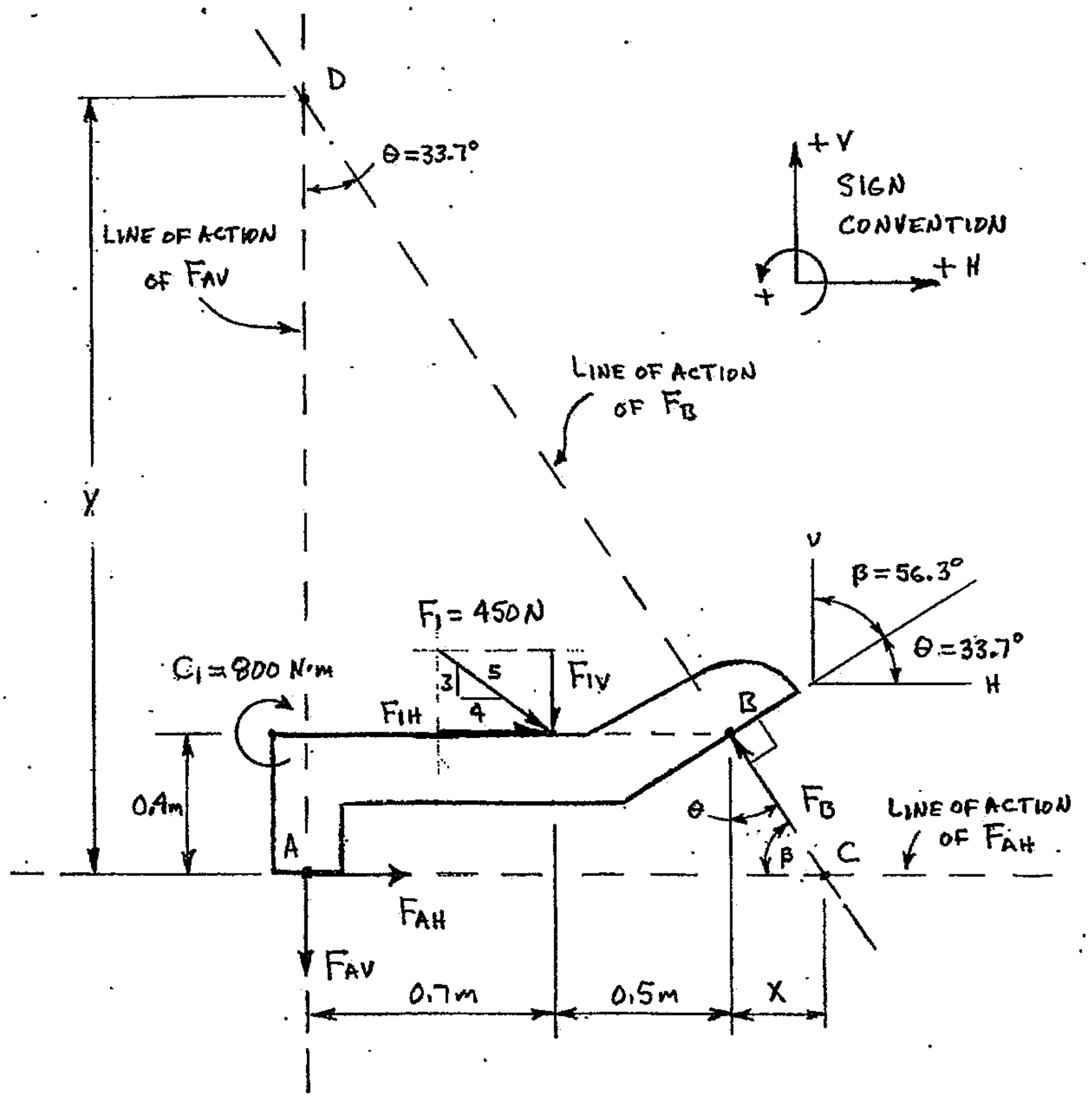

EQUILIBRIUM ANALYSIS TABLE FOR FBD OF OBJECT AB:

Principle	Unknowns	Action	Order of Solution
$\Sigma M_A = 0$	F_B	Solve for F_B using $\Sigma M_A = 0$	1
$\Sigma M_C = 0$	F_{AV}	Solve for F_{AV} using $\Sigma M_C = 0$	3
$\Sigma M_D = 0$	F_{AH}	Solve for F_{AH} using $\Sigma M_D = 0$	2
$\Sigma F_H = 0$	F_{AH}, F_B	None at this time	4 (verify solution)
$\Sigma F_V = 0$	F_{AV}, F_B	None at this time	5 (verify solution)

Example 8-5: (cont'd.)

First, calculate lengths x and y using information from the FBD:

$$\tan\theta = \frac{opp}{adj} = \frac{x}{0.4\ m}$$
$$x = (0.4\ m)(\tan\theta)$$
$$x = (0.4\ m)(\tan 33.7^0)$$
$$x = \underline{\underline{0.266767\ m}}$$

$$\tan\theta = \frac{opp}{adj} = \frac{(0.7\ m + 0.5\ m + x)}{y}$$
$$y = \frac{(0.7\ m + 0.5\ m + x)}{\tan\theta}$$
$$y = \frac{(0.7\ m + 0.5\ m + 0.266767\ m)}{\tan 33.7^0}$$
$$y = \underline{\underline{2.19932\ m}}$$

Equilibrium equations are now solved based on the order established in the equilibrium analysis table.

1. Apply static equilibrium by summing moments with respect to point A:

$$\Sigma M_A = 0$$
$$0 = \pm[(F_{AH})(d_\perp)] \pm [(F_{AV})(d_\perp)] \pm [(F_{1H})(d_\perp)] \pm [(F_{1V})(d_\perp)] \pm [(F_{BH})(d_\perp)] \pm [(F_{BV})(d_\perp)] \pm C_1$$
$$0 = -\left[\left(\frac{4}{5}\right)(F_1)(0.4\ m)\right] - \left[\left(\frac{3}{5}\right)(F_1)(0.7\ m)\right] + [(F_B)(\sin\theta)(0.4\ m)] + [(F_B)(\cos\theta)(1.2\ m)] - C_1$$
$$+[(F_B)(\sin\theta)(0.4\ m)] + [(F_B)(\cos\theta)(1.2\ m)] = +\left[\left(\frac{4}{5}\right)(F_1)(0.4\ m)\right] + \left[\left(\frac{3}{5}\right)(F_1)(0.7\ m)\right] + C_1$$
$$F_B[+(\sin\theta)(0.4\ m) + (\cos\theta)(1.2\ m)] = +\left[\left(\frac{4}{5}\right)(F_1)(0.4\ m)\right] + \left[\left(\frac{3}{5}\right)(F_1)(0.7\ m)\right] + C_1$$
$$F_B = \frac{+\left[\left(\frac{4}{5}\right)(F_1)(0.4\ m)\right] + \left[\left(\frac{3}{5}\right)(F_1)(0.7\ m)\right] + C_1}{[+(\sin\theta)(0.4\ m) + (\cos\theta)(1.2\ m)]}$$
$$F_B = \frac{+\left[\left(\frac{4}{5}\right)(450\ N)(0.4\ m)\right] + \left[\left(\frac{3}{5}\right)(450\ N)(0.7\ m)\right] + 800\ N\text{-}m}{[+(\sin 33.7^0)(0.4\ m) + (\cos 33.7^0)(1.2\ m)]}$$
$$F_B = +928.473\ N$$ (+ sign indicates <u>agreement</u> with sense shown on FBD)
$$F_B = \underline{\underline{928.473\ N}}$$ H 56.3°

<u>cont'd.</u>

Example 8-5: (cont'd.)

2. Apply static equilibrium by summing moments with respect to point C:

$$\Sigma M_C = 0$$

$$0 = \pm\left[(F_{AH})(d_\perp)\right] \pm \left[F_{AV}(d_\perp)\right] \pm \left[F_{1H}(d_\perp)\right] \pm \left[F_{1V}(d_\perp)\right]\left[(F_D)(d_\perp)\right] \pm C_1$$

$$0 = +\left[(F_{AV})(1.2\,m + x)\right] - \left[\left(\frac{4}{5}\right)(F_1)(0.4\,m)\right] + \left[\left(\frac{3}{5}\right)(F_1)(0.5\,m + x)\right] - C_1$$

$$F_{AV} = \frac{+\left[\left(\frac{4}{5}\right)(F_1)(0.4\,m)\right] - \left[\left(\frac{3}{5}\right)(F_1)(0.5\,m + x)\right] + C_1}{(1.2\,m + x)}$$

$$F_{AV} = \frac{+\left[\left(\frac{4}{5}\right)(450\,N)(0.4\,m)\right] - \left[\left(\frac{3}{5}\right)(450\,N)(0.5\,m + 0.266767\,m)\right] + 800\text{ N-m}}{(1.2\,m + 0.266767\,m)}$$

$F_{AV} = +502.447\text{ N}$ (+ sign indicates agreement with sense shown on FBD)

$F_{AV} = \underline{\underline{502.447\text{ N} \downarrow}}$

3. Apply static equilibrium by summing moments with respect to point D:

$$\Sigma M_D = 0$$

$$0 = \pm\left[(F_{AH})(d_\perp)\right] \pm \left[F_{AV}(d_\perp)\right] \pm \left[F_{1H}(d_\perp)\right] \pm \left[F_{1V}(d_\perp)\right]\left[(F_D)(d_\perp)\right] \pm C_1$$

$$0 = +\left[(F_{AH})(y)\right] + \left[\left(\frac{4}{5}\right)(F_1)(y - 0.4\,m)\right] - \left[\left(\frac{3}{5}\right)(F_1)(0.7\,m)\right] - C_1$$

$$F_{AH} = \frac{-\left[\left(\frac{4}{5}\right)(F_1)(y - 0.4\,m)\right] + \left[\left(\frac{3}{5}\right)(F_1)(0.7\,m)\right] + C_1}{(y)}$$

$$F_{AH} = \frac{-\left[\left(\frac{4}{5}\right)(450\,N)(2.19932\,m - 0.4\,m)\right] + \left[\left(\frac{3}{5}\right)(450\,N)(0.7\,m)\right] + 800\text{N-m}}{(2.19932\,m)}$$

$F_{AH} = +155.159\text{ N}$ (+ sign indicates agreement with sense shown on FBD)

$F_{AH} = \underline{\underline{155.159\text{ N} \rightarrow}}$

cont'd.

Example 8-5: (cont'd.)

The support reactions can now be verified using the force equilibrium equations. Remember that the entire numeric answers (including the + or – sign) must be substituted into the force equilibrium equations since the signs for each term in the equilibrium equations are determine from the <u>ASSUMED</u> sense shown in the FBD.

4. Verify the support reactions by applying static equilibrium in the horizontal direction

$$\Sigma F_H = 0$$

$$0 = \pm F_{AH} \pm F_{1H} \pm F_{BH}$$

$$0 = +F_{AH} + \left(\frac{4}{5}\right)F_1 - F_B \sin\theta$$

$$0 = +(+155.159\text{ N}) + \left(\frac{4}{5}\right)(450\text{ N}) - (+928.473\text{ N})(\sin 33.7^0)$$

$$\underline{\underline{0 = 0}} \qquad \text{(Support reaction values are OK)}$$

5. Verify the support reactions by applying static equilibrium in the vertical direction

$$\Sigma F_V = 0$$

$$0 = \pm F_{AV} \pm F_{1V} \pm F_{BV}$$

$$0 = -F_{AV} - \left(\frac{3}{5}\right)F_1 + F_B \cos\theta$$

$$0 = -(+502.447\text{ N}) - \left(\frac{3}{5}\right)(450\text{ N}) + (+928.473\text{ N})(\cos 33.7^0)$$

$$\underline{\underline{0 = 0}} \qquad \text{(Support reaction values are OK)}$$

<u>ANSWERS</u>:

F_{AH} = 155.2 N →

F_{AV} = 502.4 N ↓

F_B = 928.5 N 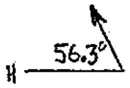

SUMMARY

Supports are normally locations where an object is connected to something that will allow the object to remain in a fixed position even when acted upon by some type of force system. Support reactions develop at each point of support in order to keep an object in static equilibrium when forces and/or couples are applied to the object.

Support reactions are shown on a free body diagram, along with all acting forces and/or couples and all other information that will be required to calculate the support reactions. A free body diagram (FBD) describes a diagram of an object that has been "cut free" at any supports, so the supports are NOT shown in the free body diagram. However, the effects of the supports must be modeled (drawn/shown) on the FBD by some combination of forces and/or couples, based on the type of support that was originally connected at each support location. Models of the support reactions for the five most common two-dimensional supports (smooth surface, roller, cable, pin, fixed) were developed and used in several examples.

An equilibrium analysis table is to determine the specific equilibrium equation will be used to solve for each unknown support reaction, and also to determine which equilibrium equation(s) will be used to verify the solution. An equilibrium analysis table also allows the user to establish an "order of solution" for the mathematical work that is required to determine the support reactions.

FURTHER EXAMPLE PROBLEMS (solutions in GFSA format are on the following pages)

Example 8-6 A pole is welded to a horizontal flat plate, and supports loads as shown below. Calculate all support reactions at point A.

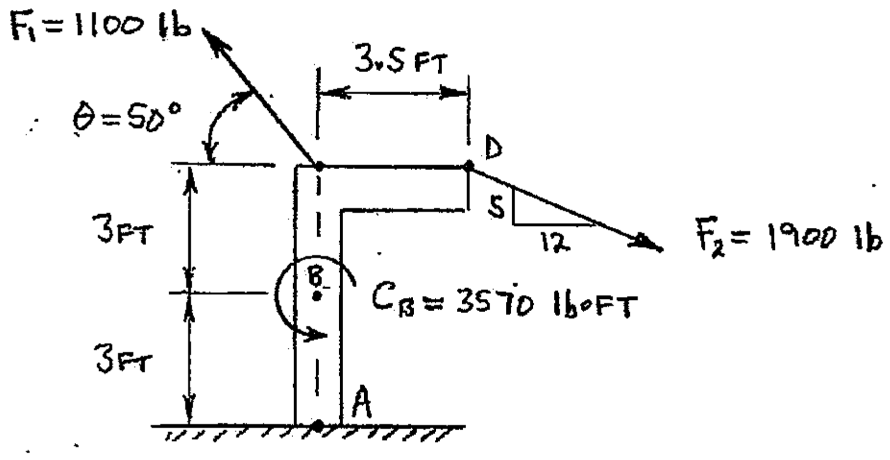

Example 8-7 A plate of uniform thickness is supported by a cable attached at B and a pin at point A. The plate weighs 1400-lb, and its weight can be assumed to act as a vertical concentrated force as shown below. Calculate all support reactions acting on the plate at points A and B.

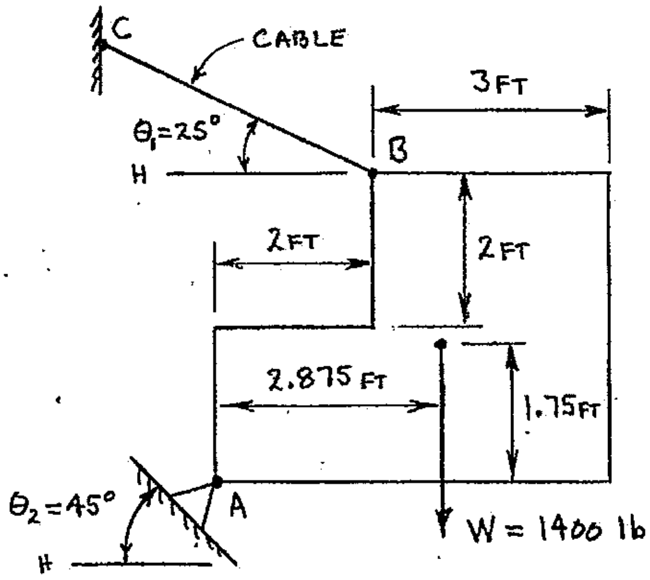

PROBLEM: EXAMPLE 8-6

GIVEN: A FORCE-COUPLE SYSTEM IS APPLIED TO A POST AS SHOWN BELOW.

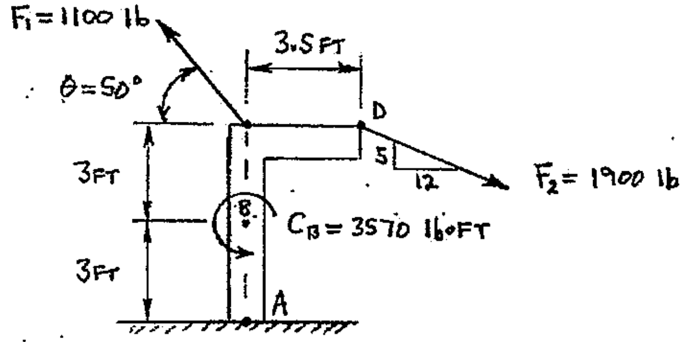

FIND: DETERMINE ALL SUPPORT REACTIONS ACTING ON THE POST AT LOCATION A.

SOLUTION:

FBD OF ENTIRE POST:

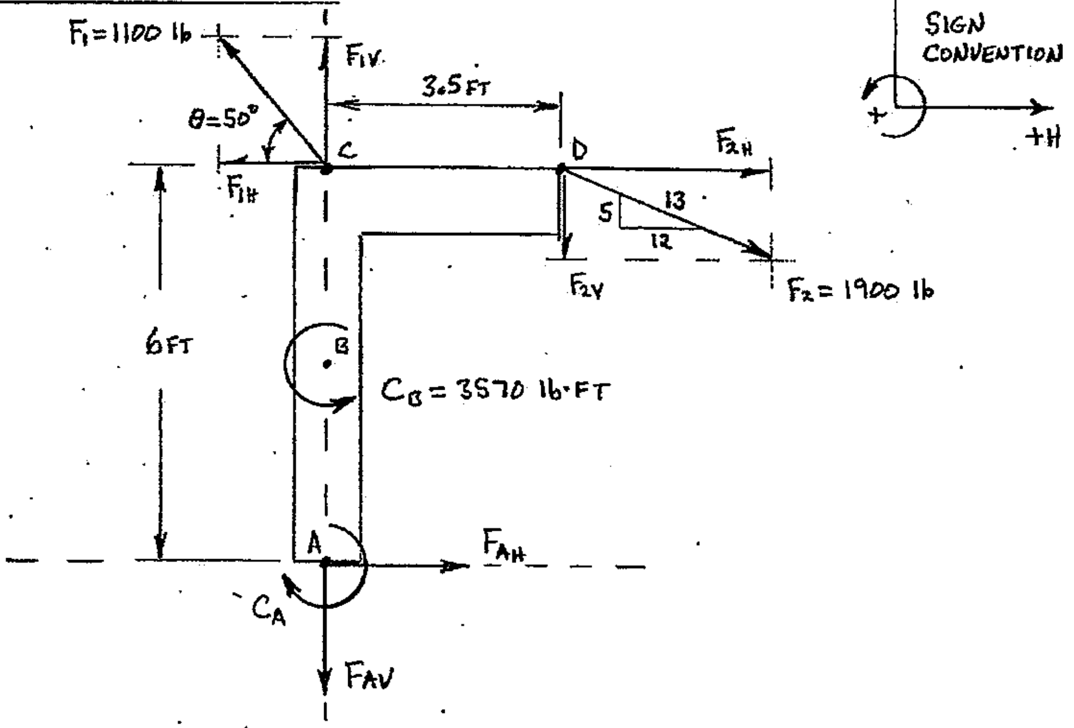

EQUILIBRIUM ANALYSIS TABLE FOR FBD OF POST:

PRINCIPLE	UNKNOWNS	ACTION	ORDER OF SOLUTION
$\Sigma M_A = 0$	C_A	SOLVE FOR C_A USING $\Sigma M_A = 0$	1
$\Sigma F_H = 0$	F_{AH}	SOLVE FOR F_{AH} USING $\Sigma F_H = 0$	2
$\Sigma F_V = 0$	F_{AV}	SOLVE FOR F_{AV} USING $\Sigma F_V = 0$	3
$\Sigma M_D = 0$	F_{AH}, F_{AV}, C_A	NONE @ THIS TIME	4 (VERIFY SOLUTION

PROBLEM: EXAMPLE 8-6 (CONT'D.)

1. APPLYING STATIC EQUILIBRIUM BY SUMMING MOMENTS ABOUT POINT A:

$$\Sigma M_A = 0$$

$$0 = \pm C_A \pm C_B \pm [(F_{AH})(d\perp)] \pm [(F_{AV})(d\perp)] \pm [(F_{1H})(d\perp)] \pm [(F_{1V})(d\perp)] \pm [(F_{2H})(d\perp)] \pm [(F_{2V})(d\perp)]$$

(the $d\perp$ terms for F_{AH}, F_{AV} and F_{1V} are struck through and marked 0)

$$0 = -C_A + C_B + [(F_1 \cos 50^\circ)(6\text{FT})] - [(\tfrac{12}{13})(F_2)(6\text{FT})] - [(\tfrac{5}{13})(F_2)(3.5\text{FT})]$$

$$C_A = +C_B + [(F_1 \cos 50^\circ)(6\text{FT})] - [(\tfrac{12}{13})(F_2)(6\text{FT})] - [(\tfrac{5}{13})(F_2)(3.5\text{FT})]$$

$$C_A = +3570 \text{ lb·FT} + [(1100 \text{ lb})(\cos 50^\circ)(6\text{FT})] - [(\tfrac{12}{13})(1900 \text{ lb})(6\text{FT})] - [(\tfrac{5}{13})(1900 \text{ lb})(3.5\text{FT})]$$

$$C_A = +3570 \text{ lb·FT} + 4242.40 \text{ lb·FT} - 10,523.07 \text{ lb·FT} - 2557.69 \text{ lb·FT}$$

$$C_A = -5268.36 \text{ lb·FT}$$

$$C_A = \underline{\underline{5268.36 \text{ lb·FT} \circlearrowright}}$$

2. APPLYING STATIC EQUILIBRIUM BY SUMMING FORCES IN THE H-DIRECTION:

$$\Sigma F_H = 0$$

$$0 = \pm F_{AH} \pm F_{1H} \pm F_{2H}$$

$$0 = +F_{AH} - F_1 \cos 50^\circ + (\tfrac{12}{13}) F_2$$

$$F_{AH} = +F_1 \cos 50^\circ - (\tfrac{12}{13}) F_2$$

$$F_{AH} = +(1100 \text{ lb})(\cos 50^\circ) - (\tfrac{12}{13})(1900 \text{ lb})$$

$$F_{AH} = +707.066 \text{ lb} - 1753.85 \text{ lb}$$

$$F_{AH} = -1046.78 \text{ lb}$$

$$F_{AH} = \underline{\underline{1046.78 \text{ lb} \leftarrow}}$$

CONT'D.

PROBLEM: EXAMPLE 8-6 (CONT'D.)

3. APPLYING STATIC EQUILIBRIUM BY SUMMING FORCES IN THE Y-DIRECTION:

$$\Sigma F_Y = 0$$

$$0 = \pm F_{AV} \pm F_{1V} \pm F_{2V}$$

$$0 = -F_{AV} + F_1 \sin 50° - (5/13) F_2$$

$$F_{AV} = + F_1 \sin 50° - (5/13) F_2$$

$$F_{AV} = +(1100\text{ lb})(\sin 50°) - (5/13)(1900\text{ lb})$$

$$F_{AV} = +842.649\text{ lb} - 730.769\text{ lb}$$

$$F_{AV} = +111.880\text{ lb}$$

$$F_{AV} = 111.880\text{ lb} \downarrow$$

4. VERIFY SOLUTION USING $\Sigma M_D = 0$:

$$\Sigma M_D = 0$$

$$0 = \pm C_A \pm C_B \pm [(F_{AH})(d\perp)] \pm [(F_{AV})(d\perp)] \pm [(F_{1H})(d\perp)^{0}] \pm [(F_{1V})(d\perp)] \pm [(F_2)(d\perp)^{0}]$$

$$0 = -C_A + C_B + [(F_{AH})(6\text{FT})] + [(F_{AV})(3.5\text{FT})] - [(F_1)(\sin 50°)(3.5\text{FT})]$$

$$0 = -(-5268.34\text{ lb-FT}) + 3570\text{ lb·FT} + [(-1046.78\text{ lb})(6\text{FT})] + [(+111.880\text{ lb})(3.5\text{FT})] - [(1100\text{ lb})(\sin 50°)(3.5\text{FT})]$$

$$0 = +5268.34\text{ lb·FT} + 3570\text{ lb·FT} - 6280.68\text{ lb·FT} + 391.580\text{ lb·FT} - 2949.27\text{ lb·FT}$$

$$0 = 0$$

(SUPPORT REACTIONS ARE OK)

ANSWER:

$F_{AH} = 1047\text{ lb} \leftarrow$

$F_{AV} = 111.9\text{ lb} \downarrow$

$C_A = 5268\text{ lb·FT}$ (counterclockwise)

PROBLEM: EXAMPLE 8-7

GIVEN: A PLATE OF UNIFORM THICKNESS IS SUPPORTED BY A CABLE ATTACHED AT B AND A PIN AT POINT A. THE PLATE WEIGHS 1400 lb, AND ITS WEIGHT CAN BE ASSUMED TO ACT AS A VERTICAL CONCENTRATED FORCE AS SHOWN BELOW.

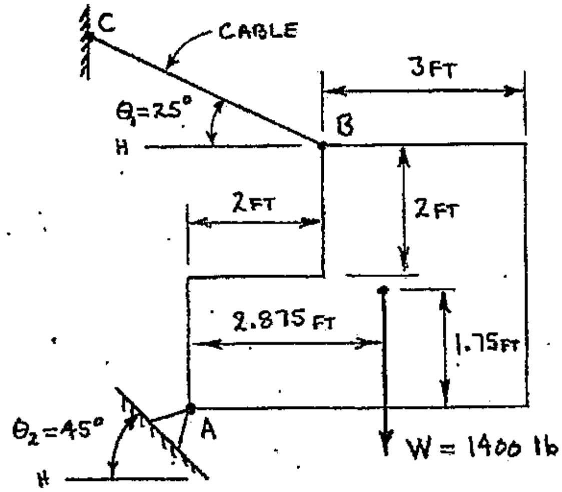

FIND: DETERMINE ALL SUPPORT REACTIONS ACTING ON THE PLATE AT POINTS A AND B.

SOLUTION:

FBD OF PLATE:

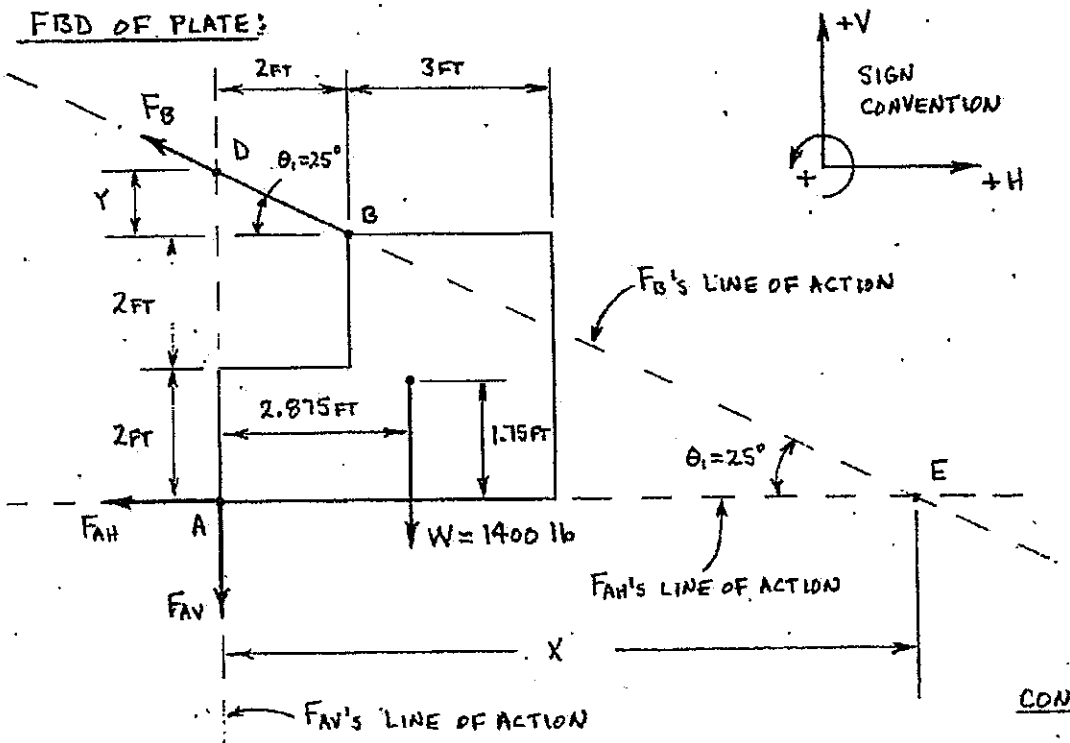

CONT'D.

PROBLEM: EXAMPLE 8-7 (CONT'D.)

EQUILIBRIUM ANALYSIS TABLE FOR FBD OF PLATE:

PRINCIPLE	UNKNOWNS	ACTION	ORDER OF SOLUTION
$\Sigma M_A = 0$	F_B	SOLVE FOR F_B USING $\Sigma M_A = 0$	1
$\Sigma M_D = 0$	F_{AH}	SOLVE FOR F_{AH} USING $\Sigma M_D = 0$	2
$\Sigma M_E = 0$	F_{AV}	SOLVE FOR F_{AV} USING $\Sigma M_E = 0$	3
$\Sigma F_H = 0$	F_{AH}, F_B	NONE @ THIS TIME.	4 (VERIFY SOLUTION)
$\Sigma F_V = 0$	F_{AV}, F_B	NONE @ THIS TIME.	5 (VERIFY SOLUTION)

DETERMINE DISTANCES X AND Y:

$$\tan\theta_1 = \frac{Y}{2\text{FT}}$$

$$Y = (\tan\theta_1)(2\text{FT})$$

$$Y = (\tan 25°)(2\text{FT})$$

$$Y = \underline{0.932615\ \text{FT}}$$

$$\tan\theta_1 = \frac{(4\text{FT} + Y)}{X}$$

$$X = \frac{(4\text{FT} + Y)}{\tan\theta_1}$$

$$X = \frac{(4\text{FT} + 0.932615\ \text{FT})}{\tan 25°}$$

$$X = \underline{10.5780\ \text{FT}}$$

1. APPLYING STATIC EQUILIBRIUM BY SUMMING MOMENTS ABOUT POINT A:

$$\Sigma M_A = 0$$

$$0 = \pm[(F_{AH})(d\perp)^{\nearrow 0}] \pm [(F_{AV})(d\perp)^{\nearrow 0}] \pm [(F_{BH})(d\perp)] \pm [(F_{BV})(d\perp)] \pm [(W)(d\perp)]$$

$$0 = +[(F_B)(\cos\theta_1)(4\text{FT})] + [(F_B)(\sin\theta_1)(2\text{FT})] - [(W)(2.875\ \text{FT})]$$

$$F_B[+(\cos\theta_1)(4\text{FT}) + (\sin\theta_1)(2\text{FT})] = +[(W)(2.875\ \text{FT})]$$

$$F_B = \frac{+[(W)(2.875\ \text{FT})]}{[+(\cos\theta_1)(4\text{FT}) + (\sin\theta_1)(2\text{FT})]}$$

$$F_B = \frac{+[(1400\ \text{lb})(2.875\text{FT})]}{[+(\cos 25°)(4\text{FT}) + (\sin 25°)(2\text{FT})]}$$

$$F_B = +900.353\ \text{lb}$$

$$F_B = \underline{900.353\ \text{lb} \angle 25°}$$ (directed up and to the left at 25°)

CONT'D.

PROBLEM: EXAMPLE 8-7 (CONT'D.)

2. APPLYING STATIC EQUILIBRIUM BY SUMMING MOMENTS ABOUT POINT D:

$$\Sigma M_D = 0$$

$$0 = \pm[(F_{AH})(d\perp)] \pm [(F_{AV})(\cancel{d\perp})^{0}] \pm [(F_B)(\cancel{d\perp})^{0}] \pm [(W)(d\perp)]$$

$$0 = -[(F_{AH})(4\text{FT} + Y)] - [(W)(2.875\text{ FT})]$$

$$F_{AH} = \frac{-[(W)(2.875\text{ FT})]}{(4\text{FT} + Y)}$$

$$F_{AH} = \frac{-[(1400\text{ lb})(2.875\text{FT})]}{(4\text{FT} + 0.932615\text{ FT})}$$

$$F_{AH} = -815.997\text{ lb}$$

$$F_{AH} = \underline{\underline{815.997\text{ lb} \longrightarrow}}$$

3. APPLYING STATIC EQUILIBRIUM BY SUMMING MOMENTS ABOUT POINT E:

$$\Sigma M_E = 0$$

$$0 = \pm[(F_{AH})(\cancel{d\perp})^{0}] \pm [(F_{AV})(d\perp)] \pm [(F_B)(\cancel{d\perp})^{0}] \pm [(W)(d\perp)]$$

$$0 = +[(F_{AV})(X)] + [(W)(X - 2.875\text{FT})]$$

$$F_{AV} = \frac{-[(W)(X - 2.875\text{FT})]}{X}$$

$$F_{AV} = \frac{-[(1400\text{ lb})(10.5780\text{ FT} - 2.875\text{FT})]}{10.5780\text{ FT}}$$

$$F_{AV} = -1019.49\text{ lb}$$

$$F_{AV} = \underline{\underline{1019.49\text{ lb} \uparrow}}$$

4. VERIFY SOLUTION USING $\Sigma F_H = 0$:

$$\Sigma F_H = 0$$

$$0 = \pm F_{AH} \pm F_{BH}$$

$$0 = -F_{AH} - F_B \cos\theta_1$$

CONT'D.

PROBLEM: EXAMPLE 8-7 (CONT'D.)

$0 = -F_{AH} - F_B \cos\theta_1$

$0 = -(-815.997 \text{ lb}) - (+900.353 \text{ lb})(\cos 25°)$

$0 = +815.997 \text{ lb} - 815.997 \text{ lb}$

$\underline{\underline{0 = 0}}$ (SUPPORT REACTIONS ARE OK)

5. VERIFY SOLUTION USING $\Sigma F_V = 0$:

$\Sigma F_V = 0$

$0 = \pm F_{AV} \pm F_{BV} \pm W$

$0 = -F_{AV} + F_B \sin 25° - W$

$0 = -(-1019.49 \text{ lb}) + (+900.353 \text{ lb})(\sin 25°) - 1400 \text{ lb}$

$0 = +1019.49 \text{ lb} + 380.506 \text{ lb} - 1400 \text{ lb}$

$\underline{\underline{0 = 0}}$ (SUPPORT REACTIONS ARE OK)

ANSWER:

$F_{AH} = 816.0$ lb →

$F_{AV} = 1019$ lb ↑

$F_B = 900.4$ lb ↖ 25°

PRACTICE PROBLEMS

Diagrams for problems 1-3 are shown below. For each problem, complete a free body diagram, followed by an equilibrium analysis table for the FBD. The free body diagram must include a title, all acting forces and/or couples, correctly modeled reactions at each support, extended lines of action for all unknown forces and labels for the intersection points of the extended lines of action. A sign convention must also be established and shown with each FBD. Do NOT solve for any of the support reactions.

8.1 A cantilever beam is loaded as shown below.

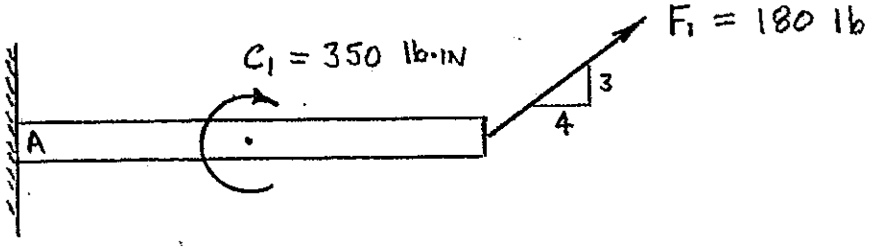

8.2 A triangular plate is supported as shown below, and its weight (W) acts through the centroid of the plate.

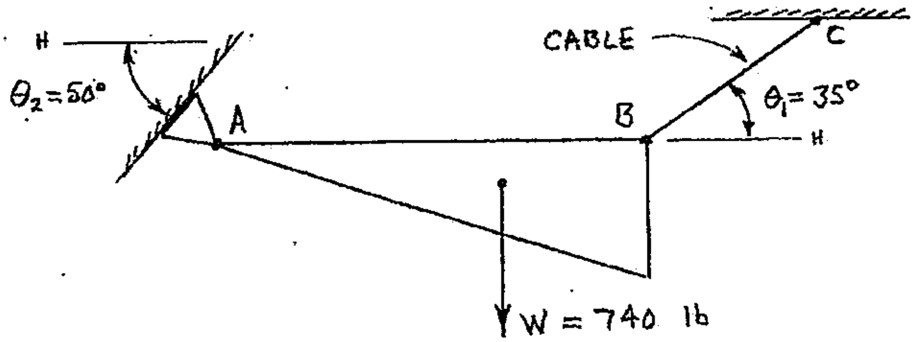

8.3 A bracket is loaded and supported as shown below.

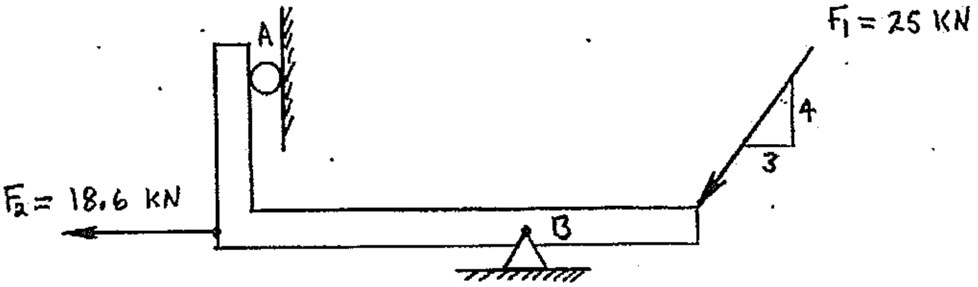

Practice Problems

8.4 Rigid bar ABC is horizontal, and is supported by a pin at point B. The bar weighs 35 pounds and its weight can be modeled as a concentrated force that passes through the midpoint of the bar. Calculate the reaction (lb) of the cable at point C on bar ABC.

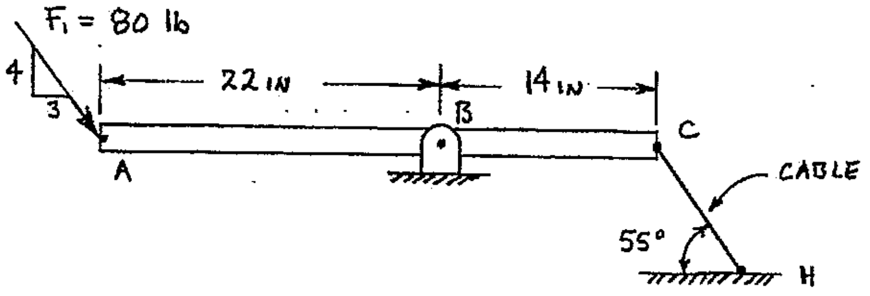

8.5 A bracket has been welded to a vertical support at point A, and loaded as shown below. Calculate all support reactions acting on the bracket at point A

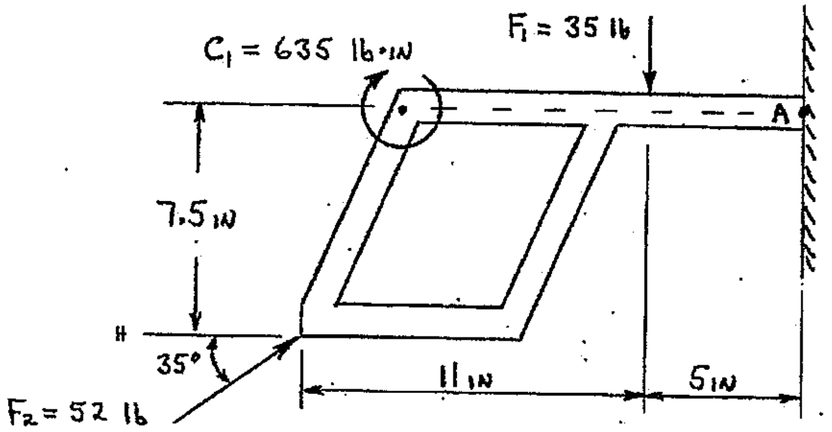

8.6 A bracket is supported by a pin at location A, a cable at location B, and is loaded as shown below. Calculate all support reactions acting on the bracket.

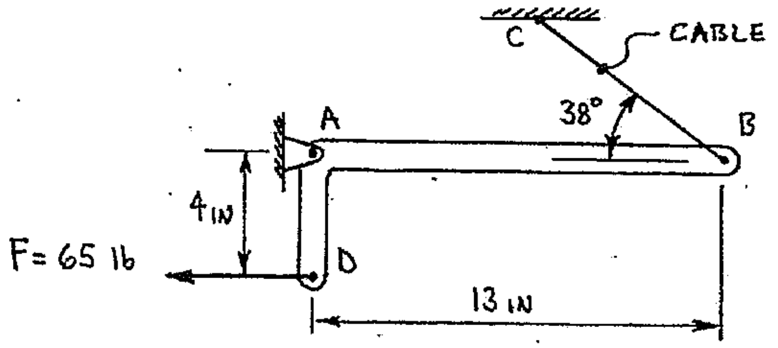

Practice Problems

8.7 The rigid bar shown below is supported by a pin at location A and rests on a smooth surface at location B. Calculate all support reactions acting on the bar at locations A and B.

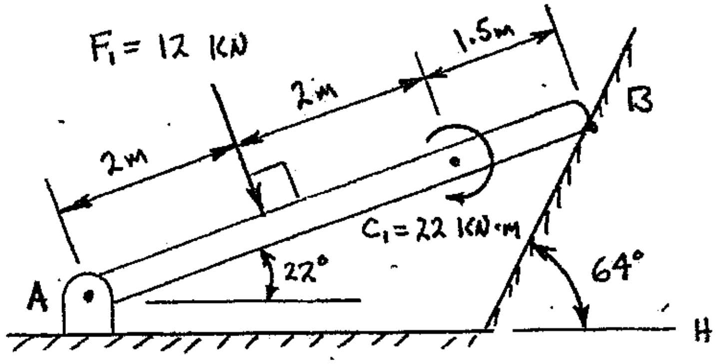

8.8 A bracket is supported by a roller at location A and a pin at location B. Loads are applied as shown. Calculate all support reactions acting on the bracket at locations A and B.

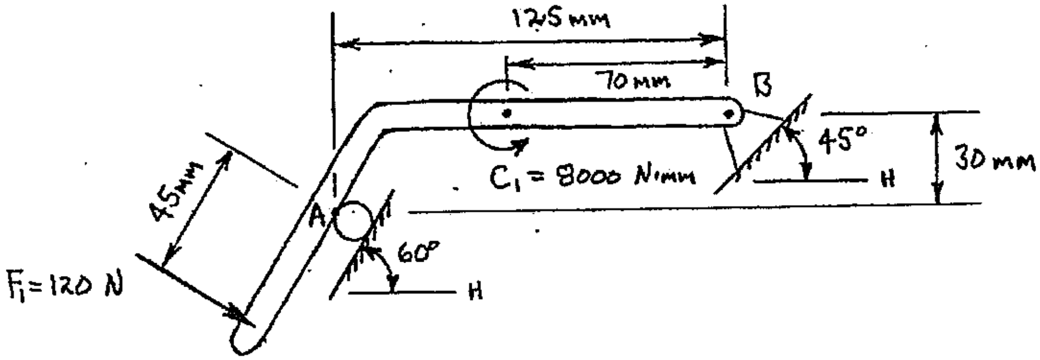

This page intentionally left blank.

CHAPTER 9: CENTROIDS OF PLANE AREAS

A centroid is defined as the geometric center of an area. The centroid is the location (a point) at which an area could be balanced if it were supported at that point. The centroid locations for three common areas are shown in Figure 9-1.

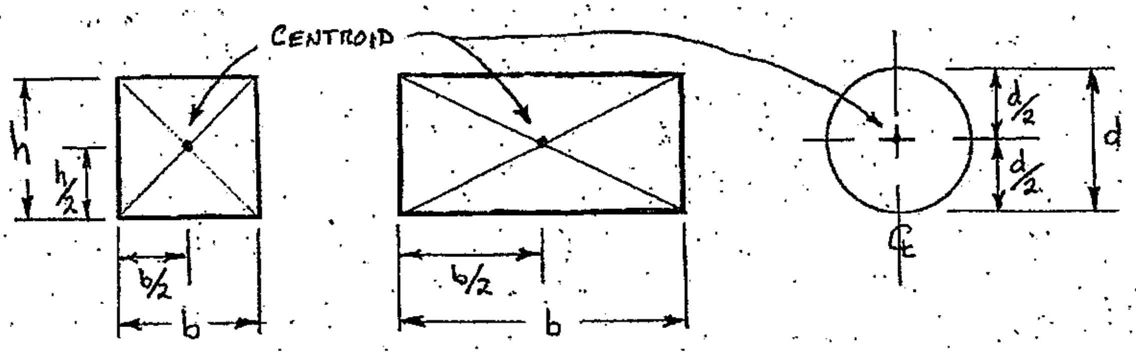

FIGURE 9-1 Centroid locations for three common areas

The centroid locations for other elementary areas are shown in Figure 9-3. Centroid locations for the cross-sectional areas of some common structural shapes (wide-flange beams, standard I-beams, channels, etc.) are listed in Tables B1-&7 in the Appendix.

A centroid will always be located on an axis of symmetry, as shown in Figure 9-2 (and 9-1). For the I-beam, the centroid is located at the intersection of the horizontal and vertical axes of symmetry. The centroid of the T-beam must lie on its vertical axis of symmetry, however the vertical location of the centroid would have to be calculated.

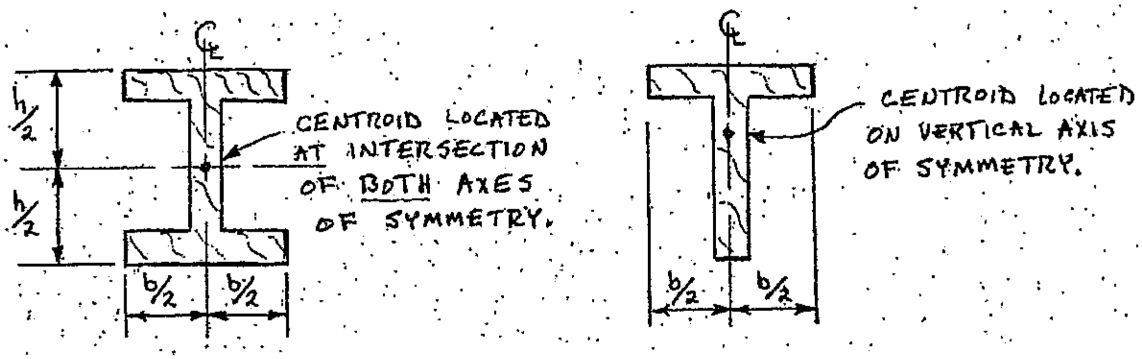

FIGURE 9-2 Centroid locations for areas with axes of symmetry

Since the centroid is a location (point), the centroid's location must be specified based on some reference. Typically the reference is a set of perpendicular axes (horizontal & vertical; X & Y) and the centroid's location is given as the perpendicular distance from each axis.

The location of the perpendicular axes must be determined prior to beginning calculations for a centroid's location. The location of the perpendicular axes may be given, or the axes may be placed where they would be the most convenient if no axes were given. For the T-beam shown in Figure 9-2, the vertical axis of symmetry could be used as the Y-axis, with the X-axis placed along the bottom edge of the beam. Since a centroid must lie on an axis of symmetry, the centroid would lie ***on*** the Y-axis of the T-beam and calculations would only be needed to determine the perpendicular distance from the X-axis to the centroid.

Shape	Centroid	Area
Triangle	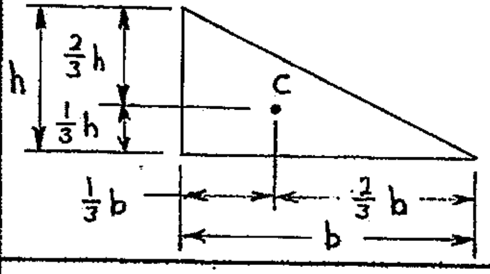	$A = \frac{1}{2}bh$
Semicircle	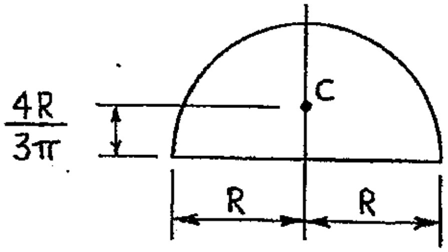	$A = \frac{1}{2}\pi R^2$
Quarter circle	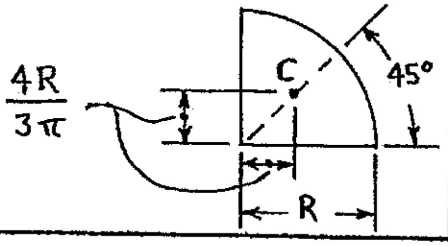	$A = \frac{1}{4}\pi R^2$

FIGURE 9-3 Centroids of simple areas (check technical references for other areas)

An area composed of a number of discreet elementary shapes and/or common structural cross-sections is called a composite area. To calculate the centroid location for a composite area, you must first identify the individual elementary areas that make up the composite area. In Figure 9-4, the composite area is made up of three individual areas; the cross-sectional area of the C10X30 channel, the cross-sectional area of the W21X50 wide-flange beam, and the cross-sectional area of the 1"x 8" plate.

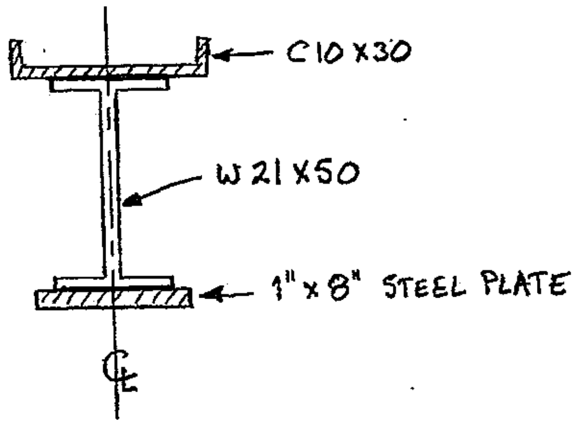

FIGURE 9-4 The cross-section of a built-up beam

Centroid locations for composite areas are normally calculated by using the concept of "area moments". In the most general terms, a moment is the product of some quantity and the perpendicular distance from the quantity to a reference (typically a point or an axis). An area moment is the product of an area and the perpendicular distance from the area's centroid to a reference axis, as shown below:

Moment = (quantity)(d⊥ to a reference axis or point)

Area Moment = (area)(d⊥ from the area's centroid to a reference axis)

The fundamental equations used to calculate the centroid location for a composite area are shown below:

$$A\overline{X} = \sum_{i=1}^{n} a_i x_i \qquad \left[A\overline{X} = \text{ area moment} = (\text{area})(d \perp)\right]$$

$$A\overline{Y} = \sum_{i=1}^{n} a_i y_i \qquad \left[A\overline{Y} = \text{ area moment} = (\text{area})(d \perp)\right]$$

The equations from the previous page are then algebraically manipulated to isolate the perpendicular distances ($\overline{X}$ and $\overline{Y}$) from the centroid of a composite area to each of the perpendicular reference axes. Several forms for the equations used to locate the centroid of a composite area are shown below:

$$\overline{X} = \frac{\sum_{i=1}^{n} a_i x_i}{A} \qquad \text{or:} \quad \overline{X} = \frac{\sum_{i=1}^{n} a_i x_i}{\sum_{i=1}^{n} a_i} \qquad \text{or:} \quad \overline{X} = \frac{\sum a_i x_i}{\sum a_i}$$

$$\overline{Y} = \frac{\sum_{i=1}^{n} a_i y_i}{A} \qquad \text{or:} \quad \overline{Y} = \frac{\sum_{i=1}^{n} a_i y_i}{\sum_{i=1}^{n} a_i} \qquad \text{or:} \quad \overline{Y} = \frac{\sum a_i y_i}{\sum a_i}$$

Where:

$\overline{X} =$ d$\perp$ from the Y-reference axis to the centroid of a composite area

$\overline{Y} =$ d$\perp$ from the X-reference axis to the centroid of a composite area

$\sum_{i=1}^{n} a_i x_i = a_1 x_1 + a_2 x_2 + a_3 x_3 + a_4 x_4 + \ldots\ldots\ldots\ldots + a_n x_n$

$\sum_{i=1}^{n} a_i y_i = a_1 y_1 + a_2 y_2 + a_3 y_3 + a_4 y_4 + \ldots\ldots\ldots\ldots + a_n y_n$

$A =$ total area of a composite shape $\left(A = \sum_{i=1}^{n} a_i = a_1 + a_2 + a_3 + a_4 + \ldots\ldots\ldots + a_n\right)$

$x_i =$ d$\perp$ from the Y-reference axis to the centroid of the ith discreet element

$y_i =$ d$\perp$ from the X-reference axis to the centroid of the ith discreet element

$a_i =$ area of the ith discreet area within a composite area

i = subscript used to identify the discreet area elements within a composite area $(i = 1, 2, 3, 4, \ldots\ldots\ldots n)$

$\sum$ = a "truncated" version of $\sum_{i=1}^{n}$ sometimes used when writing the algebraic statements

Several things must be done before beginning calculations for a centroid location. First, the perpendicular reference axes must be established and positive senses shown. Sometimes, in academic problems, the reference axes are given. If not given, the reference axes should be established in a convenient location (typically along one or two sides of a composite area, or on an axis of symmetry if one exists). Next, the composite area must by divided into discreet elements whose individual centroid locations are known or easily calculated using information as shown in Figure 9-1,

Figure 9-3, and Tables B1-B7 (Appendix). A complete working diagram is then constructed. The working diagram should show all necessary dimensions, the individual discreet area elements, and the location of the centroid for each discreet area element. The location of the centroid of the composite area can then be calculated based on information shown on the working diagram.

Many individual quantities (areas, distances, etc.) are required to calculate the centroid location for a composite area, so a table is normally developed to keep track of individual items. If units are shown in the table headings, then units won't be required with each entry in the table. Each row of the table represents a discreet element of area. The last row is for summations of the a_i, a_ix_i and a_iy_i columns. Signs for area magnitudes are positive (+) if the area is solid; negative (-) for any "holes". Signs for distance magnitudes are based on the signs established for the reference axes.

Table for centroid location:

element	a_i (in^2)	x_i (in)	y_i (in)	a_ix_i (in^3)	a_iy_i (in^3)
1					
2					
n					
Σ					

The following examples demonstrate how to calculate the centroid location of a composite area.

Example 9-1 Calculate the centroid location for the shaded area shown below, based on the given reference axes.

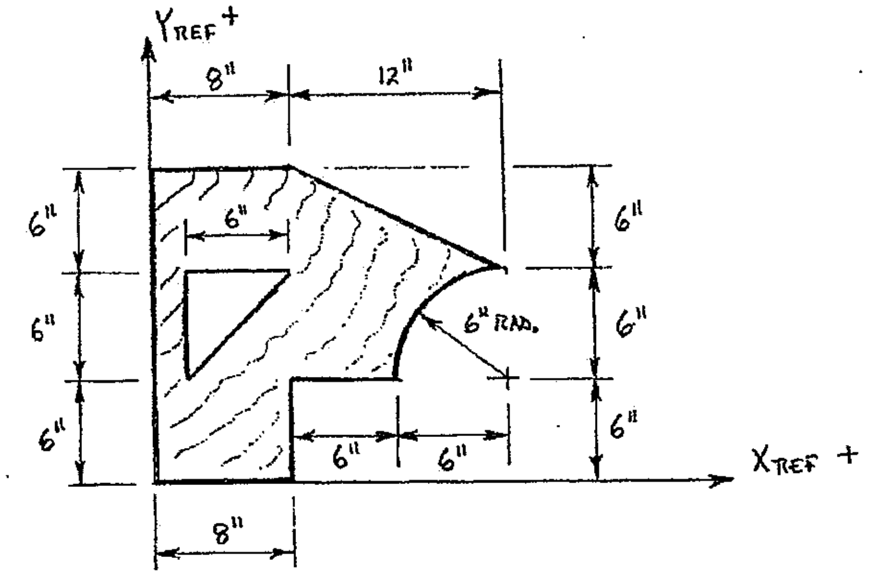

cont'd.

Example 9-1: (cont'd.)

First, a working diagram must be constructed. The diagram should show all dimensions, the breakdown of the composite area into elementary discreet areas, the centroid locations for the discreet areas, and the perpendicular distances (x_i and y_i) for each discreet area. (These working diagrams need to be LARGE, due to the amount of information shown on the diagram.)

Working diagram:

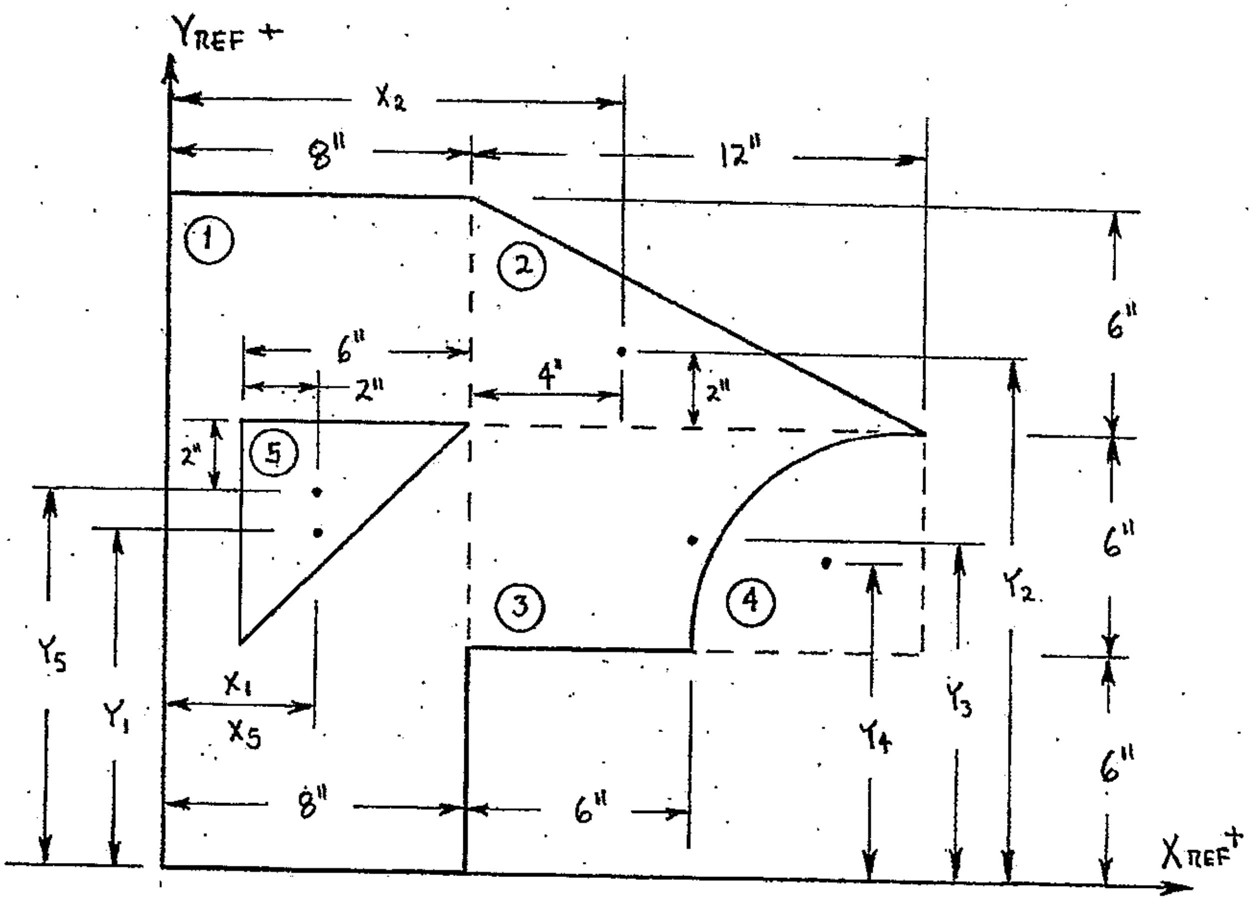

Area element 1 (a_1) is a solid rectangle, 8" x 18":

a_1 = (8 in)(18 in) = 144 in^2

x_1 = 4 in

y_1 = 9 in

Area element 2 (a_2) is a solid right triangle with base of 12" and height of 6":

a_2 = ½(12 in)(6 in) = 36 in^2

x_2 = 8 in + 4 in = 12 in

y_2 = 6 in + 6 in + 2 in = 14 in

cont'd.

Example 9-1: (cont'd.)

Area element 3 (a_3) is a solid rectangle, 6" x 12":

$a_3 = 72\ in^2$

$x_3 = 8\ in + 6\ in = 14\ in$

$y_3 = 6\ in + 3\ in = 9\ in$

Area element 4 (a_4) is a quarter circle "hole" with a radius of 6":

$a_4 = ¼\ \pi R = ¼\ (\pi)(6\ in) = 4.712\ in^2$ (shown as negative in table)

$x_4 = (8\ in + 12\ in) - 0.4244R = (20\ in) - 0.4244(6\ in) = 17.454\ in$

$y_4 = 6\ in + 0.4244R = 6\ in + 0.4244(6\ in) = 8.546\ in$

Area element 5 (a_5) is a right triangular "hole" with base of 6" and height of 6":

$a_4 = ½\ (6\ in)(6\ in) = 18\ in^2$ (shown as negative in table)

$x_5 = 4\ in$

$y_5 = 12\ in - 2\ in = 10\ in$

Table for centroid location:

element	a_i (in^2)	x_i (in)	y_i (in)	$a_i x_i$ (in^3)	$a_i y_i$ (in^3)
solid 1	+ 144	+ 4	+ 9	+ 576	+ 1296
solid 2	+ 36	+ 12	+ 14	+ 432	+ 504
solid 3	+ 72	+ 14	+ 9	+ 1008	+ 648
"hole" 4	- 4.712	+ 17.454	+ 8.546	- 82.243	- 40.269
"hole" 5	- 18	+ 4	+ 10	- 72	- 180
Σ	+ 229.288			+ 1861.757	+ 2227.731

The $\overline{X}$ and $\overline{Y}$ dimensions for the centroid location can now be calculated:

$$\overline{X} = \frac{\sum a_i x_i}{\sum a_i} = \frac{+1861.757\,in^3}{+229.288\,in^2} = \underline{\underline{+8.1197\,in}}$$

$$\overline{Y} = \frac{\sum a_i y_i}{\sum a_i} = \frac{+2227.731\,in^3}{+229.288\,in^2} = \underline{\underline{+9.7159\,in}}$$

Answer:

Centroid is located at:

$\overline{X} = +8.120\ in$

$\overline{Y} = +9.716\ in$

Example 9-2 A built-up beam is made by welding together four channels, as shown in the cross-section below. Calculate the location of the centroid with respect to the given reference axes.

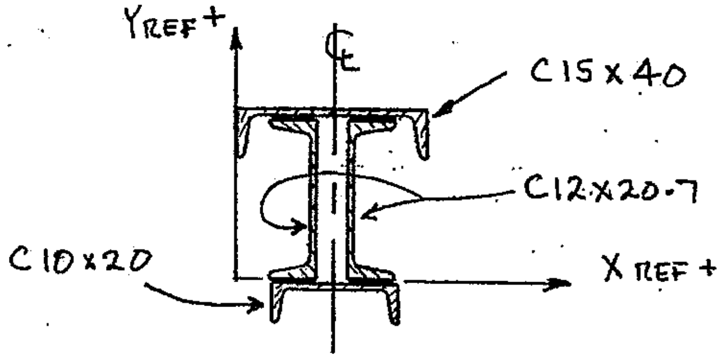

First, a working diagram is developed that shows relevant dimensions, the individual discreet elements, and the centroid location for each element.

<u>Working diagram</u>:

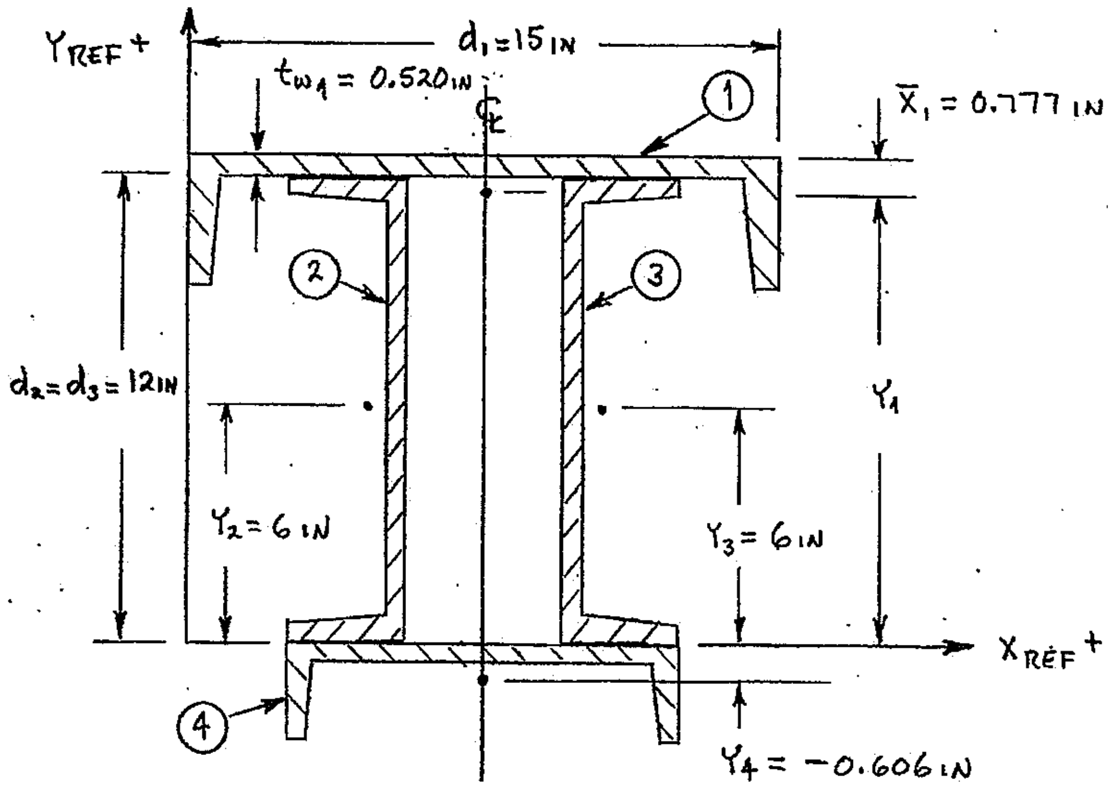

The built-up beam is symmetric about its centerline (the centerline represents the vertical axis of symmetry). Since the centroid of an object will always be located on an axis of symmetry (if available), the $\overline{X}$ location of the centroid must lie on the centerline.

cont'd.

Example 9-2: cont'd.

$\overline{X}$ location of centroid:

$$\overline{X} = \frac{d_1}{2} = \frac{15\,in}{2} = \underline{\underline{+7.5\ in}}$$ (+ sign indicates that $\overline{X}$ is to the right of Y_{REF})

Most of the y_i distances can be taken directly from Table 3 (Appendix). However, y_1 must be calculated as shown below:

$$y_1 = (d_2 + t_{w1}) - \overline{x}_1$$
$$y_1 = (12.0\,in + 0.520\,in) - 0.777\,in$$
$$y_1 = \underline{\underline{+11.743\ in}}$$

<u>Table for centroid location</u>: ($\overline{Y}$ only)

element		a_i (in^2)	y_i (in)	a_iy_i (in^3)
C15x40	1	+ 11.8	+11.743	+ 138.567
C12x20.7	2	+ 6.09	+ 6.0	+ 36.54
C12x20.7	2	+ 6.09	+ 6.0	+ 36.54
C10x20	3	+ 5.88	- 0.606	- 3.563
	Σ	+ 29.86		+ 208.084

The $\overline{Y}$ dimension for the centroid location can now be calculated:

$$\overline{Y} = \frac{\sum a_i y_i}{\sum a_i} = \frac{+208.084\,in^3}{+29.86\,in^2} = \underline{\underline{+6.96865\ in}}$$

<u>Answers</u>:

$\overline{X} = +7.500$ in

$\overline{Y} = +6.969$ in

The centroid of this built-up section does not lie ***on*** any of the individual elements, but in the "open space" in the center of the built-up section. Likewise, the centroid for each individual channel does not lie on the channel. A centroid is not required to lie on a physical area, it just defines the geometric center of the area.

SUMMARY

A centroid is the geometric center of an area. The centroid is the location (a point) at which an area could be balanced if it were supported at that point. Centroid locations for elementary shapes and common structural members are typically found in reference figures and tables.

An area composed of a number of discreet elementary shapes and/or common structural cross-sections is called a composite area. The centroid location for a composite area can be found by using area moments with respect to a given set of reference axes.

FURTHER EXAMPLE PROBLEMS (solutions in GFSA format are on the following pages)

Example 9-3 Calculate the centroid location ($\overline{X}, \overline{Y}$) for the shaded area shown below (with respect to the given reference axes).

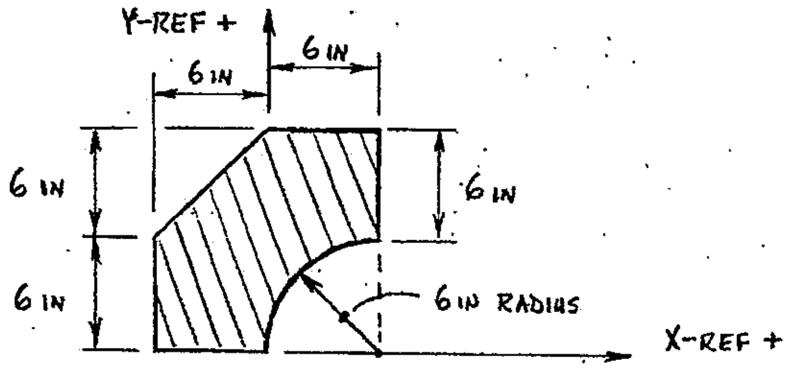

Example 9-4 A C12 x 20.7 channel and a L6 x 4 x ⅜ angle are welded together to form the cross-section as shown below. The angle is oriented such that the longer leg is vertical. Calculate the location ($\overline{X}, \overline{Y}$) of the centroid with respect to the reference axes shown.

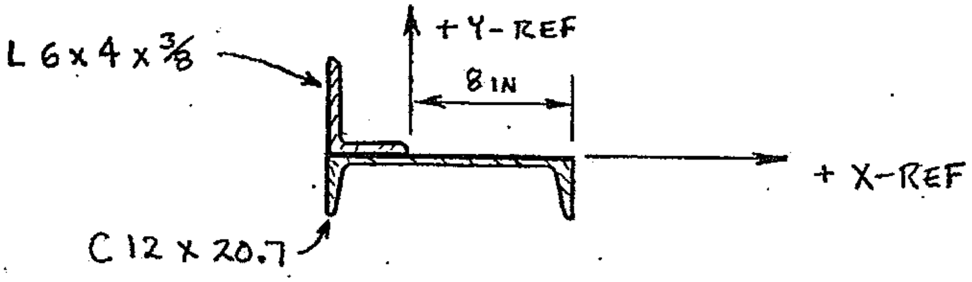

PROBLEM: EXAMPLE 9-3

GIVEN: SHADED AREA AND REFERENCE AXES SHOWN BELOW.

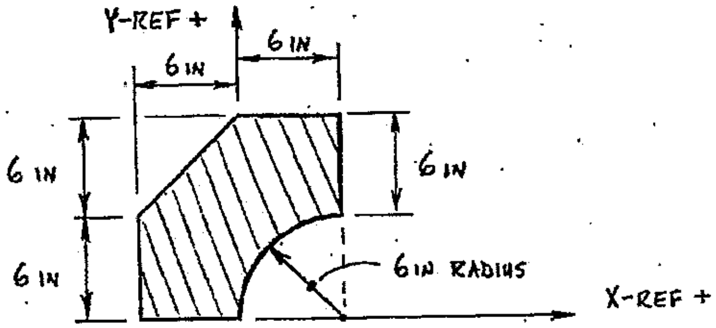

FIND: CALCULATE THE LOCATION $(\overline{X}, \overline{Y})$ OF THE CENTROID FOR THE SHADED AREA.

SOLUTION:

WORKING DIAGRAM:

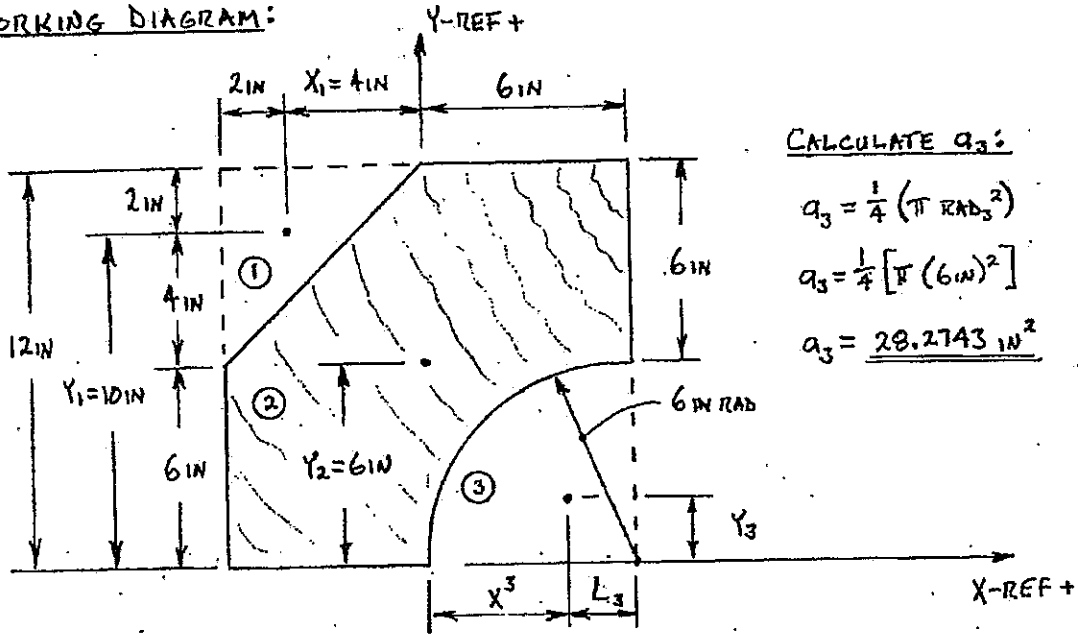

CALCULATE a_3:

$a_3 = \frac{1}{4}(\pi \, RAD_3^2)$

$a_3 = \frac{1}{4}[\pi (6_{IN})^2]$

$a_3 = \underline{28.2743 \text{ IN}^2}$

DETERMINE X_3 AND Y_3:

$Y_3 = \frac{4(RAD_3)}{3\pi}$

$Y_3 = \frac{4(6_{IN})}{3\pi}$

$Y_3 = \underline{2.54648 \text{ IN}}$

$X_3 = 6_{IN} - L_3$ (AND $L_3 = Y_3$)

$X_3 = 6_{IN} - 2.54648 \text{ IN}$

$X_3 = \underline{3.45352 \text{ IN}}$

CONT'D.

PROBLEM: EXAMPLE 9-3 (CONT'D.)

TABLE FOR CENTROID LOCATION:

ELEMENT	a_i (IN²)	x_i (IN)	y_i (IN)	$a_i x_i$ (IN³)	$a_i y_i$ (IN³)
TRIANGULAR HOLE ①	−18.0	−4.0	+10.0	+72.0	−180.0
SOLID 12×12 SQ. ②	+144.0	0	+6.0	0	+864.0
1/4 CIRCULAR HOLE ③	−28.2743	+3.45352	+2.54648	−97.6459	−71.9999
Σ	+97.7257			−25.6459	+612.0001

CALCULATE $\bar{X}$ AND $\bar{Y}$:

$$\bar{X} = \frac{\Sigma a_i x_i}{\Sigma a_i}$$

$$\bar{X} = \frac{-25.6459 \text{ IN}^3}{+97.7257 \text{ IN}^2}$$

$$\bar{X} = -0.262427 \text{ IN}$$

$$\bar{Y} = \frac{\Sigma a_i y_i}{\Sigma a_i}$$

$$\bar{Y} = \frac{+612.0001 \text{ IN}^3}{+97.7257 \text{ IN}^2}$$

$$\bar{Y} = +6.26245 \text{ IN}$$

ANSWER:

CENTROID LOCATED AT:

$\bar{X} = -0.2624$ IN

$\bar{Y} = +6.262$ IN

PROBLEM: EXAMPLE 9-4

GIVEN: A C12 X 20.7 CHANNEL AND A L6x4x3/8 ANGLE ARE WELDED TOGETHER TO FORM THE CROSS-SECTION SHOWN BELOW. THE ANGLE IS ORIENTED SUCH THAT THE LONGER LEG IS VERTICAL.

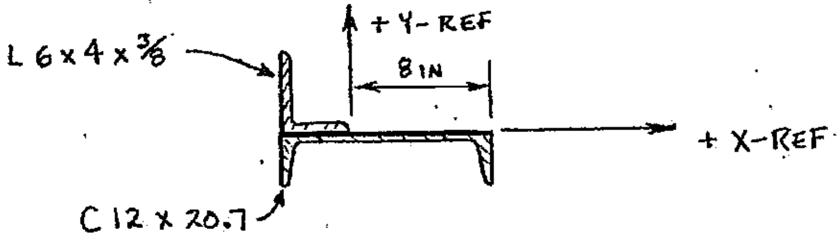

FIND: CALCULATE THE LOCATION $(\bar{X}, \bar{Y})$ OF THE CENTROID WITH RESPECT TO THE GIVEN REFERENCE AXES.

SOLUTION:

WORKING DIAGRAM:

$a_1 = 3.61\ in^2$ (TABLE B4)

$a_2 = 6.09\ in^2$ (TABLE B3)

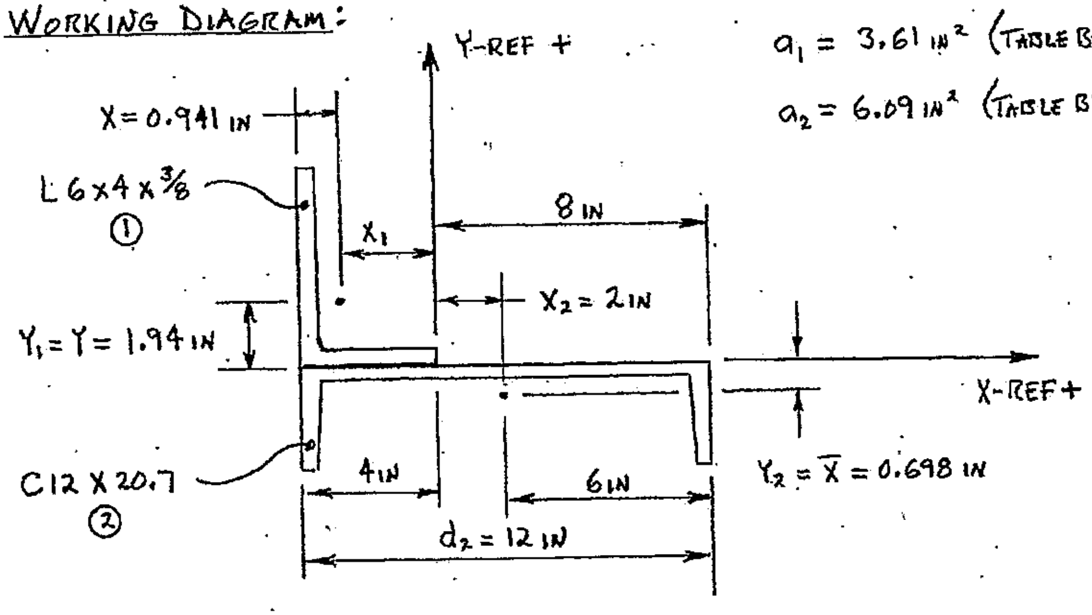

$X_1 = 4\ in - X$

$X_1 = 4\ in - 0.941\ in$

$X_1 = \underline{\underline{3.059\ in}}$

CONT'D.

PROBLEM: EXAMPLE 9-4 (CONT'D.)

TABLE FOR CENTROID LOCATION:

ELEMENT	a_i (in^2)	x_i (in)	y_i (in)	$a_i x_i$ (in^3)	$a_i y_i$ (in^3)
1	+3.61	−3.059	+1.94	−11.0430	+7.00340
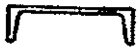 2	+6.09	+2.00	−0.698	+12.1800	−4.25082
Σ	+9.70			+1.1370	+2.75258

SOLVE FOR $\bar{X}$ AND $\bar{Y}$:

$$\bar{X} = \frac{\Sigma a_i x_i}{\Sigma a_i}$$

$$\bar{X} = \frac{+1.1370 \text{ in}^3}{+9.70 \text{ in}^2}$$

$$\bar{X} = \underline{\underline{0.117216 \text{ in}}}$$

$$\bar{Y} = \frac{\Sigma a_i y_i}{\Sigma a_i}$$

$$\bar{Y} = \frac{+2.75258 \text{ in}^3}{+9.70 \text{ in}^2}$$

$$\bar{Y} = \underline{\underline{+0.283771 \text{ in}}}$$

ANSWER:

CENTROID LOCATION:

$\bar{X} = +0.1172$ in

$\bar{Y} = +0.2838$ in.

PRACTICE PROBLEMS

9.1 Calculate the centroid location for the shaded area shown below, based on the given reference axes.

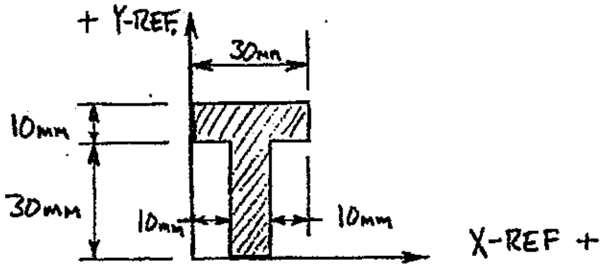

9.2 Calculate the centroid location for the shaded area shown below, based on the given reference axes.

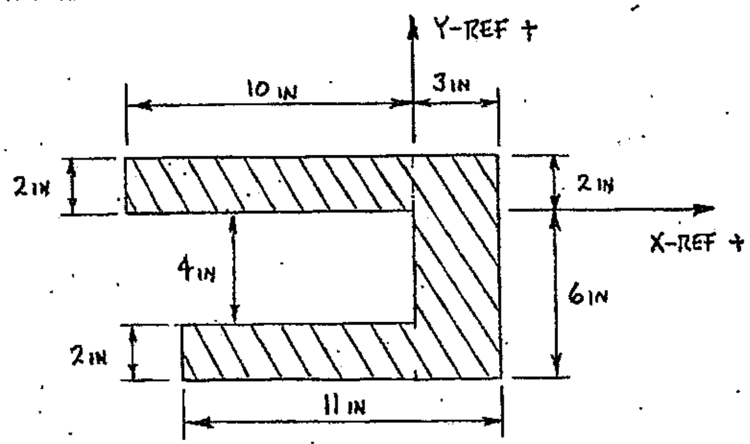

9.3 Calculate the centroid location for the shaded area shown below, based on the given reference axes.

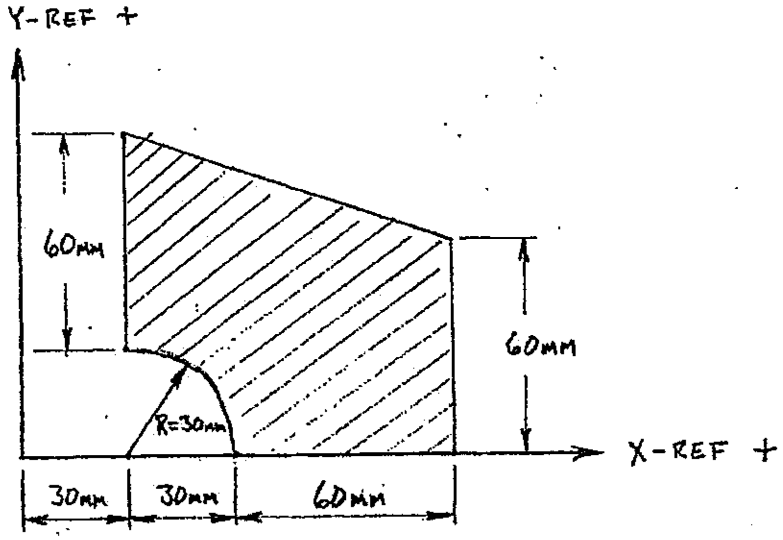

Practice Problems

9.4 A T-beam is built-up by welding together three steel channels as shown below. Calculate the centroid location for the beam's cross-section using the given reference axes.

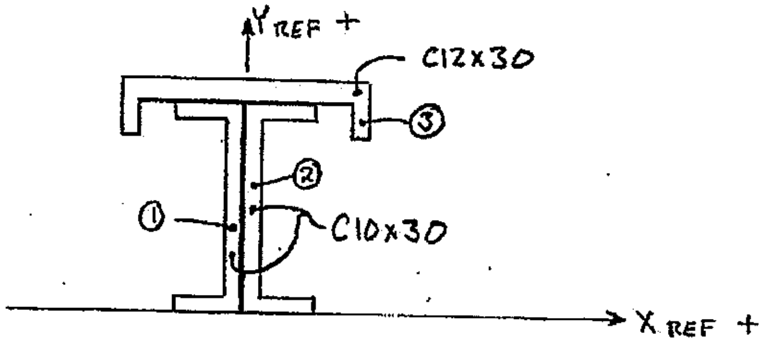

9.5 A beam is fabricated by welding together three steel channels; the beam's cross-section shown below. Calculate the centroid location for the cross-section based on the given reference axes.

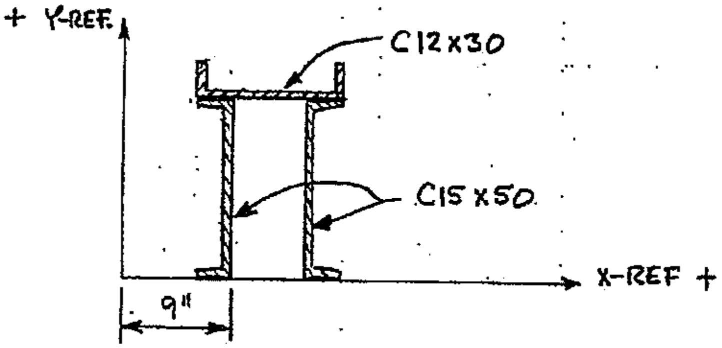

9.6 The cross-section for a fabricated beam is shown below. Calculate the centroid location based on the given reference axes.

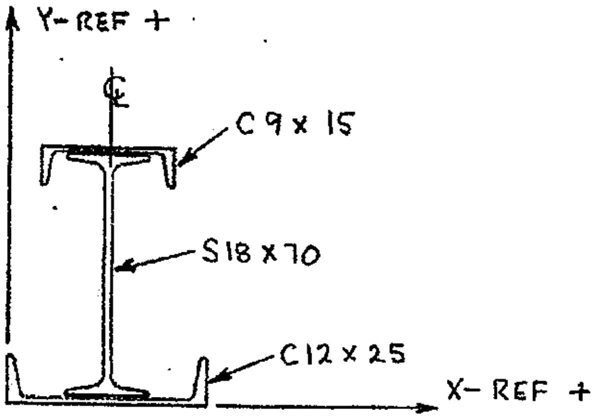

9.7 Calculate the centroid location for the shaded area shown below, based on the given reference axes.

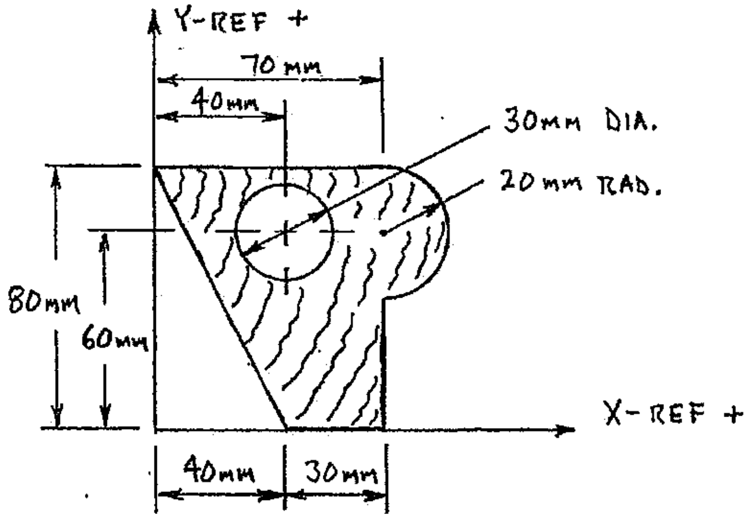

9.8 Calculate the centroid location for the shaded area shown below, based on the given reference axes.

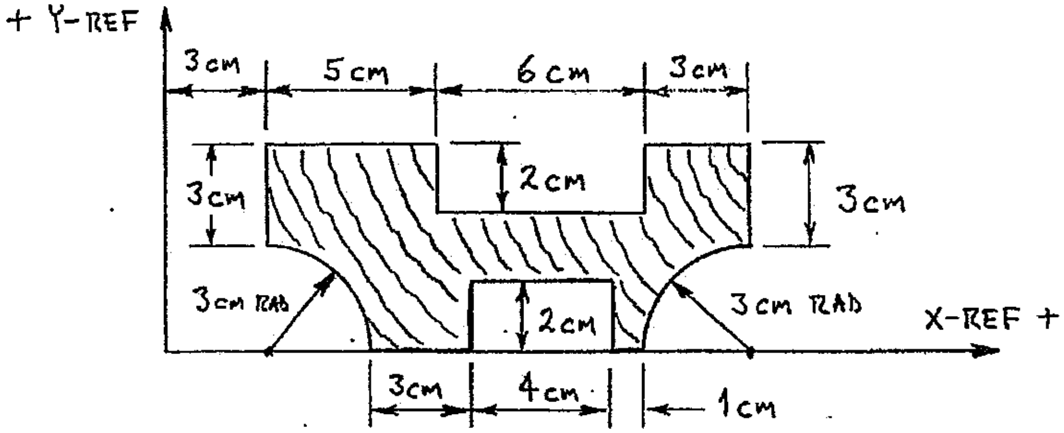

9.9 A beam is fabricated by welding together three steel channels, and its cross-section is shown below. Reference axes are also shown. Calculate the location ($\overline{X}, \overline{Y}$) of the centroid based on the given reference axes.

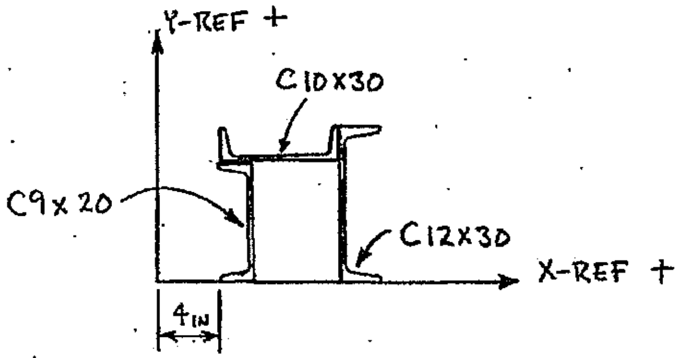

This page intentionally left blank.

CHAPTER 10: STATIC EQUILIBRIUM: BEAMS, AND DISTRIBUTED LOADS

COMMON TYPES OF BEAMS

The term "beam" is normally used to describe a single member that is used to span a distance between supports. Horizontal beams are the most common, however beams can have any orientation from horizontal to vertical. For instance, a vertical flagpole experiencing a wind load could be described as a cantilever beam.

The three most common types of beams are shown below. A ***simply supported*** beam has two supports, one pin and one roller, and the supports are located at the extreme ends of the beam. An ***overhanging*** beam has two supports, one pin and one roller, but one or both supports may be located at some distance in from each end resulting in overhangs at one or both ends. A ***cantilever*** beam is supported only at one end, and the support must be a fixed connection (welded, bonded, built-in, etc.). Cables and "smooth surfaces" can also be used as one of the supports on a simply supported or overhanging beam, typically in conjunction with a pin as the second support on the beam.

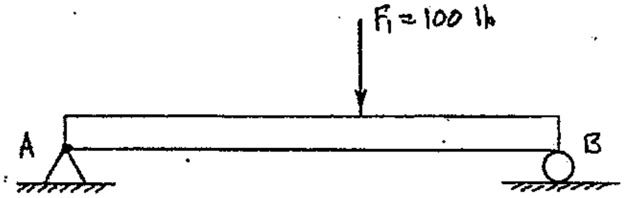

FIGURE 10-1 Simply supported beam

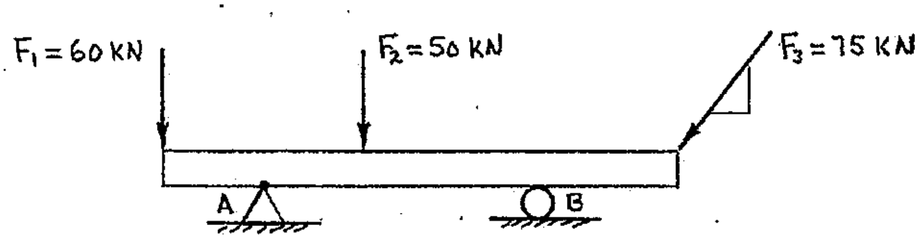

FIGURE 10-2 Overhanging beam

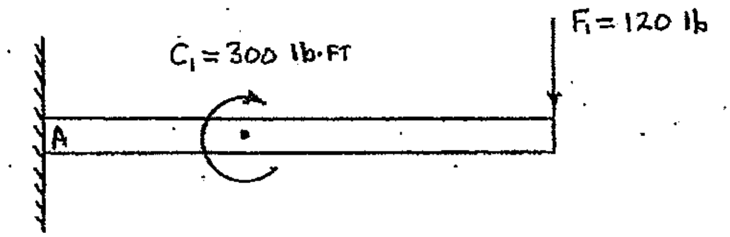

FIGURE 10-3 Cantilever beam

COMMON LOADING CONDITIONS FOR BEAMS

Any combination of the common loading conditions (forces, couples, distributed loads) shown in Figures 10-4 through 10-7 can be applied to a beam. Two of the more common loads applied to beams are forces and couples. ***A concentrated load*** (or concentrated force) occurs when the entire load is assumed to act at a single point. A concentrated load must have magnitude, direction, sense and a point of application, as shown in Figure 10-4.

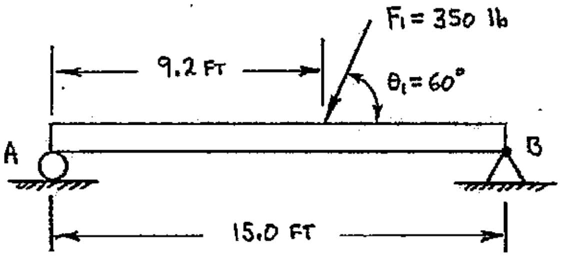

FIGURE 10-4 Simply supported beam with a single concentrated load

A beam could also be loaded with an ***applied couple***, as shown in Figure 10-5. The magnitude, rotational sense and point of application must all be specified for an applied couple.

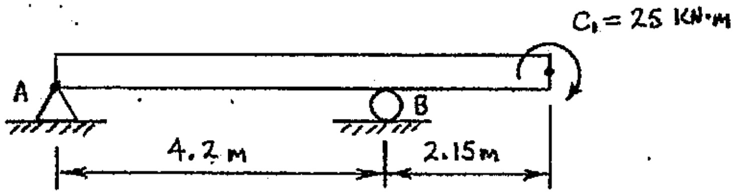

FIGURE 10-5 Overhanging beam with an applied couple

DISTRIBUTED LOADS

Distributed loads (or line loads) are another common loading condition for beams. Distributed loads are loads that are applied over a long and very narrow area, such as the top surface of a beam. For example, a wood 2 x 12 used as a floor joist in residential construction has a top surface that is only 1½ inch wide. However, the 2 x 12 might span 15 feet (180-in) between supports. The weight of the floor acting on the 2 x 12 beam is applied along its top surface (a long and very narrow area), and would represent a distributed load.

Distributed loads are represented on initial (or GIVEN:) diagrams as an area composed of parallel arrows; the arrows define the direction and sense of the distributed load (see Figures 10-6 and 10-7, following page). The units for a distributed load are "load per unit length" (lb/ft, lb/in, kN/m, etc.).

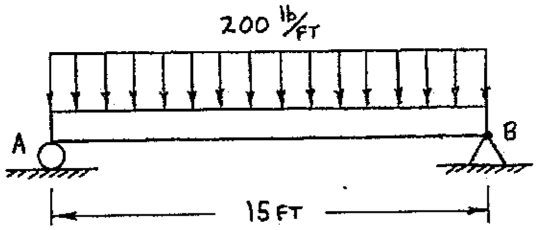

FIGURE 10-6 Simply supported beam with a constant distributed load

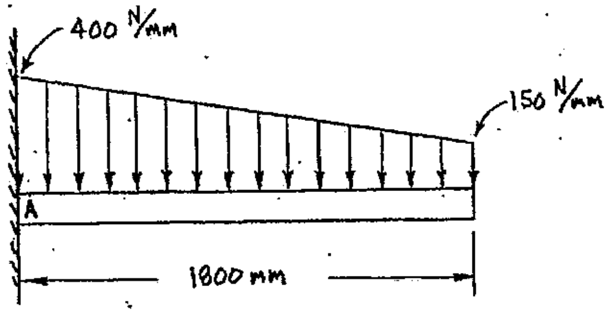

FIGURE 10-7 Cantilever beam with a linearly varying distributed load

The magnitude of the concentrated effect (the total force) due to a distributed load is represented by the area of the shape used to describe the distributed load. Figure 10-8 shows a linearly varying distributed load whose shape is a right triangle with a base of 8-ft and a "height" of 200 lb/ft. The concentrated effect (total force) of the distributed load is calculated as shown below:

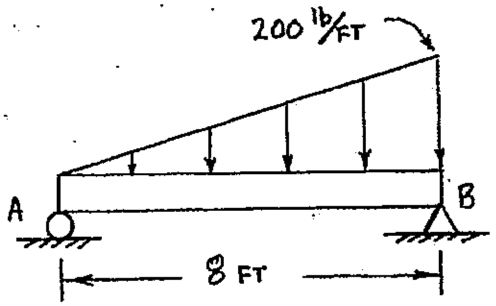

$$\text{total force} = \text{area of distributed load}$$

$$\text{total force} = \left(\frac{1}{2}\right)(\text{base})(\text{height})$$

$$\text{total force} = \left(\frac{1}{2}\right)(8\,\text{ft})\left(200\frac{\text{lb}}{\text{ft}}\right) = \underline{\underline{800\text{ lb}\ \downarrow}}$$

FIGURE 10-8 Total force due to a linearly varying distributed load

The line of action of the concentrated effect (the total force) due to a distributed load must pass through the centroid of the shape (area) used to describe the distributed load. When solving for support reactions, a distributed load's concentrated effect is modeled on a free body diagram as a single concentrated force that has the same direction and sense as the original distributed load. The single concentrated force must also pass through the centroid of the area used to describe the distributed load. Example 10-1 (following page) shows how to construct a free body diagram of a beam experiencing a linearly varying distributed load.

Example 10-1 A simply supported beam is loaded as shown below. Construct a complete free body diagram of the beam.

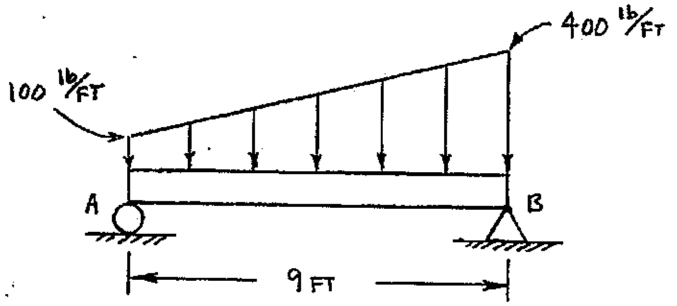

Rather than find the centroid of the entire trapezoidal area represented by the distributed load, the original area is divided into two simple shapes (areas) whose centroid locations are easily located. Area 1 is a rectangle with a base of 9-ft and height of 100 lb/ft. Area 2 is a right triangle with a base of 9-ft and a height of 300 lb/ft. The outline of each shape is shown on the free body diagram, and then the total concentrated force (L_1 and L_2) due to each individual area is shown acting through each area's centroid. Magnitudes for L_1 and L_2 are calculated and shown on the FBD, along with dimensions that locate the lines of action for L_1 and L_2. Reactions are modeled at each support, and then the extended lines of action are constructed for all unknown forces. A sign convention is established and shown. The complete free body diagram is shown below:

FBD of beam AB:

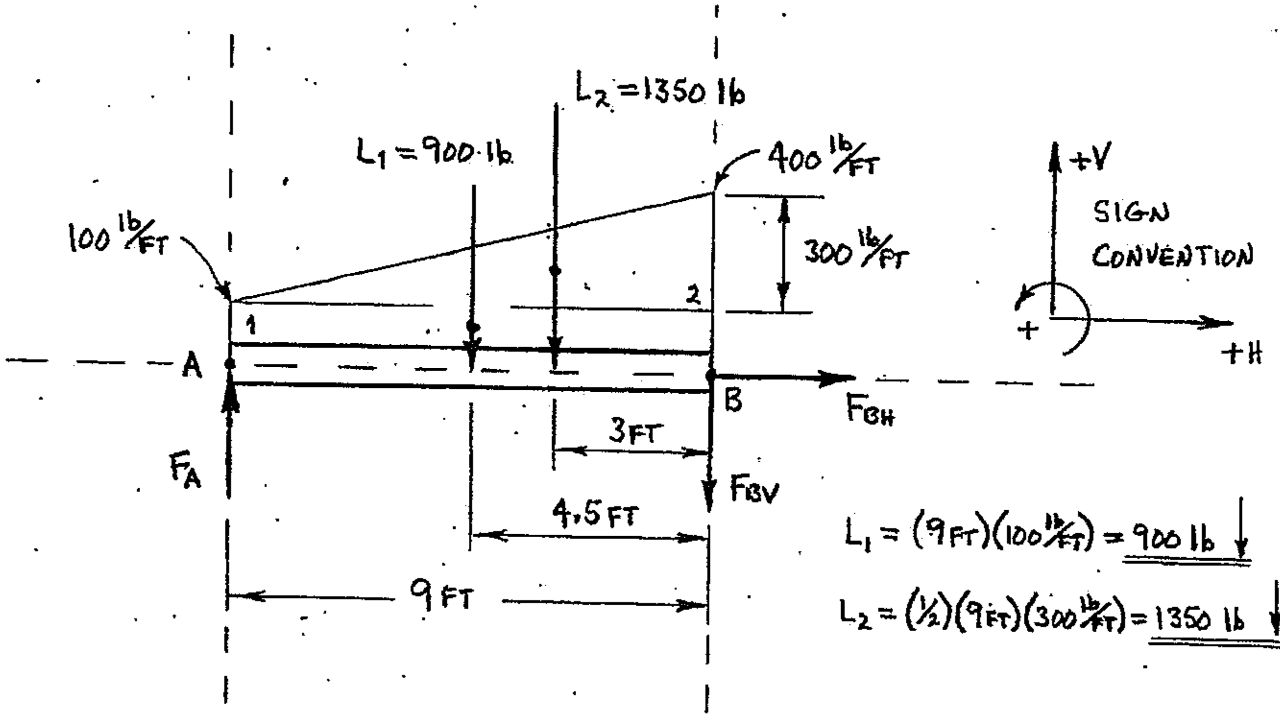

$L_1 = (9\,\text{FT})(100\,\text{lb/FT}) = \underline{900\ \text{lb}} \downarrow$

$L_2 = (\tfrac{1}{2})(9\,\text{FT})(300\,\text{lb/FT}) = \underline{1350\ \text{lb}} \downarrow$

BEAM WEIGHT

Beam weight may, or may not, be included in calculations for support reactions. Sometimes the beam weight is negligible compared to other loads applied to the beam; in these cases beam weight is typically NOT included in any calculations. However, for beams made from large steel structural sections (I-beams, channels, angles, etc.) beam weight can significantly effect the support reactions acting on the beam and may be required in calculations to determine the support reactions.

The standard descriptions used for structural sections are read as follows:

W24 X 104 (read as: W24 "by" 104)

The letter indicates the type of section (W = wide-flange I-beam, S = standard I-beam, C = channel, L = angle). The number directly following the letter is the nominal depth (or height) of the beam cross-section. The last number in the description is the beam's unit weight in pounds per foot. So, the notation "W24 X 104" describes a wide-flange I-beam with a 24-in nominal depth that weighs104 lb/ft. A beam's unit weigh IS a distributed load, and if the beam weight is required in calculations it is included on a free body diagram as a constant distributed load acting vertically downward.

Example 10-1 An S24 X 80 section is used as a cantilever beam and is loaded as shown below. The beam weight must be included in all calculations. Develop a FBD for the beam.

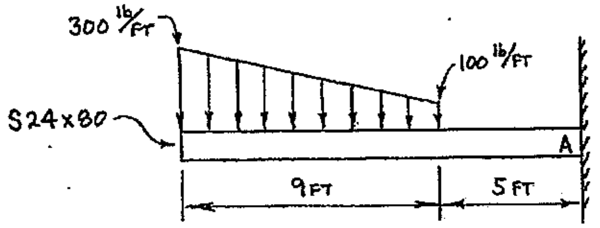

FBD OF CANTILEVER BEAM:

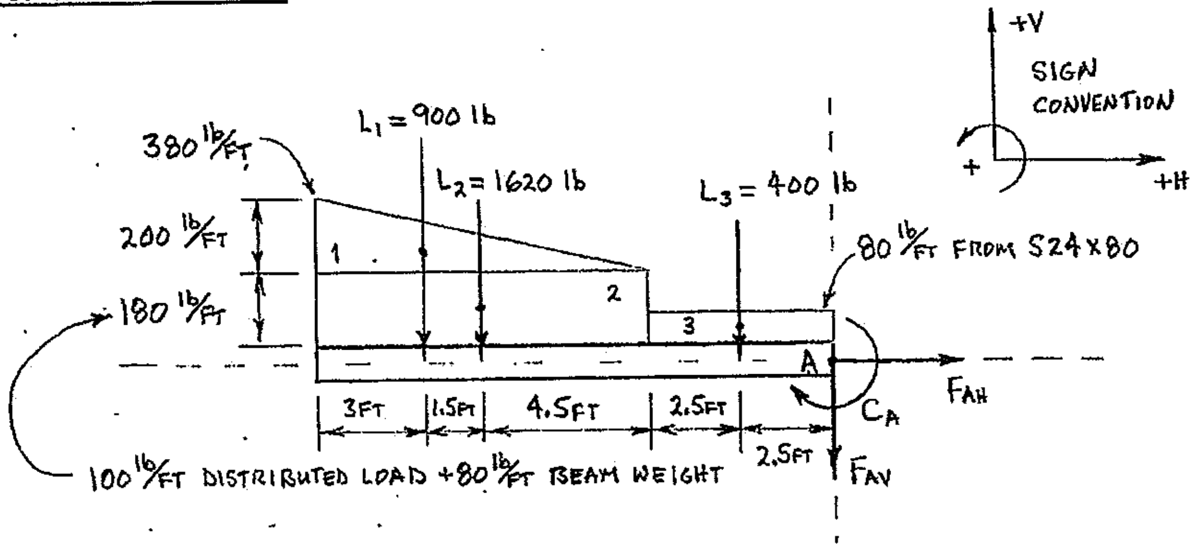

CONSTRUCTING FREE BODY DIAGRAMS OF BEAMS

The initial (GIVEN:) diagram of a beam is sometimes shown with concentrated loads and distributed loads acting along the top surface of the beam and supports acting along the bottom surface of the beam (Figure 10-9). Applied couples may be shown acting at the top surface of a beam, along the bottom surface of the beam, or along the beam's centerline.

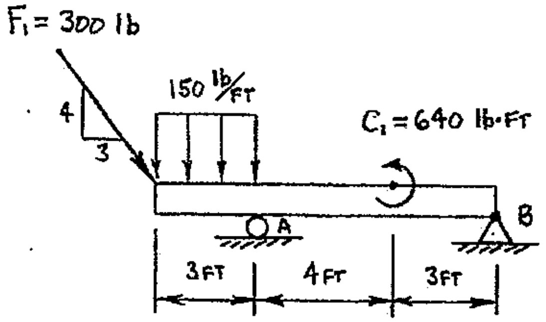

Figure 10-9 A typical initial (Given:) diagram of an overhanging beam

The free body diagram shown in Figure 10-10 was constructed for the overhanging beam shown in Figure 10-9, with all loads (acting loads and support reactions) shown at their original points of application. It *appears* that component F_{1H} has a moment arm (labeled as ?) with respect to points A and B, since the point of application for F_1 has been shown along the top surface of the beam while points A and B were shown along the bottom surface. It would then seem that the moment caused by F_{1H} would need to be included when applying moment equilibrium at points A and B. However, the depth (height) of a beam's cross-section is normally VERY SMALL compared to the length of the beam. Consequently, any moments produced by F_{1H} with respect to either A or B would be NEGLIGIBLE, and would not significantly effect any calculated values.

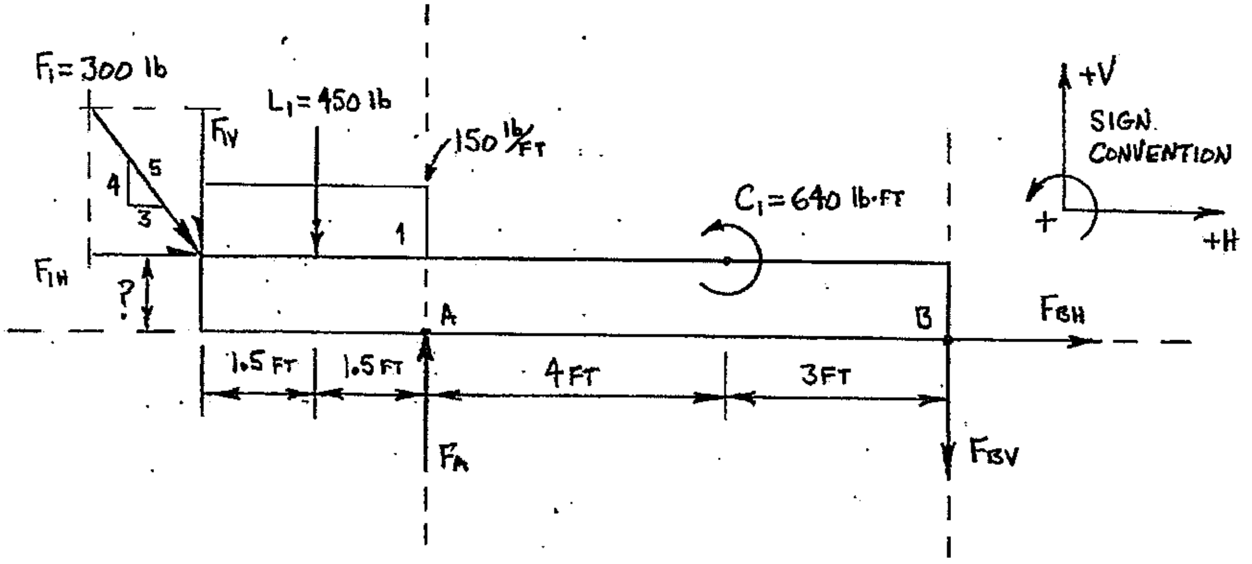

Figure 10-10 A free body diagram for the beam shown in Figure 10-9

A common, and reasonable, assumption used for equilibrium calculations is that ALL loads (acting loads and reactions) are applied at a beam's centerline, regardless of whether they were originally shown acting on the beam's top or bottom surface (see Figure 10-11). When shown acting on the beam's centerline, F_{1H} has a zero moment arm (and would cause zero moment) with respect to points A and B. Therefore, it is common practice (when constructing free body diagrams) to show all loads acting on the centerline of any member whose cross-sectional depth (height) is very small when compared to its length.

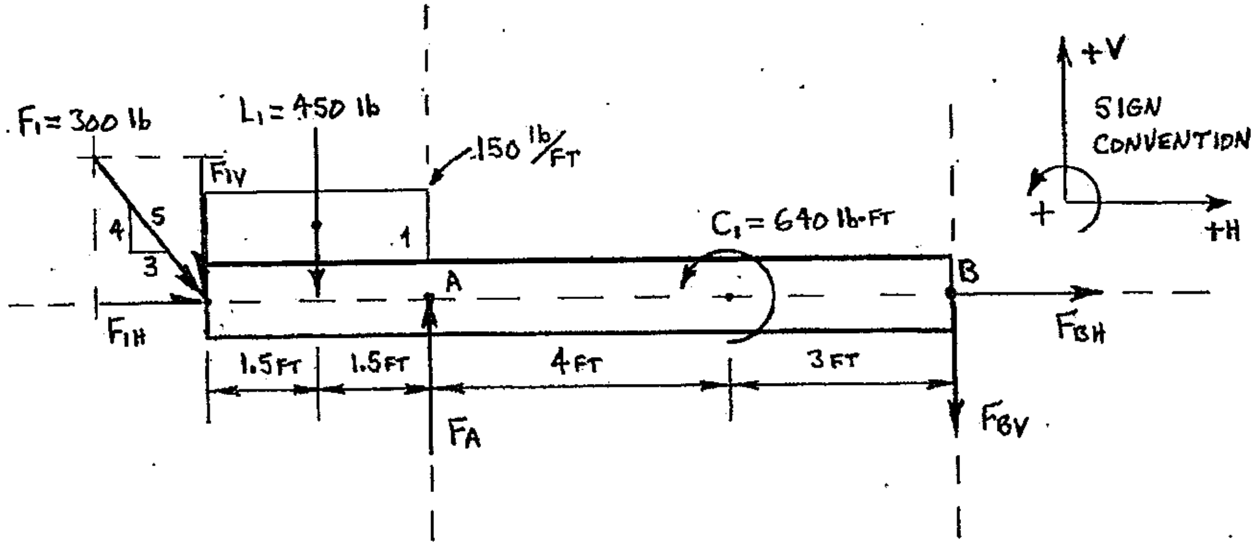

Figure 10-11 FBD with all loads shown acting on a beam's centerline

SOLUTION PROCEDURE FOR STATIC EQUILIBRIUM OF BEAMS – SUPPORT REACTIONS

A general solution procedure for determining the support reactions acting on beams is shown below. This solution procedure is very similar to the procedure developed in Chapter 8 (Support Reactions and Free Body Diagrams). The solution procedure is outlined below, with any changes and additions shown in **BOLD-FACE, SMALL-CAP** type.

General Solution Procedure for Static Equilibrium and Support Reactions (beams):

1. Construct a free body diagram of the beam (must always work from a FBD).
   a. Include all acting influences (concentrated forces, **DISTRIBUTED LOADS** and/or couples).
   b. Do NOT show the supports on the FBD. Instead, correctly model all reactions (forces and/or couples) at any locations where the **BEAM** has been disconnected from a support.
   c. ***Assume*** a sense (push or pull) for all reaction forces.
   d. ***Assume*** a sense (↺ or ↻) for all reaction couples.
   e. Do NOT show the perpendicular components of the unknown forces at this time.

f. **CONSTRUCT THE OUTLINE OF EACH DISTRIBUTED LOAD, AND THEN SHOW A SINGLE CONCENTRATED FORCE THAT REPRESENTS THE MAGNITUDE OF THE EFFECT OF EACH DISTRIBUTED LOAD. THE SINGLE CONCENTRATED FORCE MUST PASS THROUGH THE CENTROID OF THE AREA USED TO DESCRIBE THE DISTRIBUTED LOAD, AND MUST HAVE THE SAME DIRECTION AND SENSE AS THE ORIGINAL DISTRIBUTED LOAD. LABEL THE CONCENTRATED EFFECT WITH THE MAGNITUDE CALCULATED FROM THE ORIGINAL DISTRIBUTED LOAD.**

g. Extend the lines of action for each of the UNKNOWN forces (extend the line outward from both the arrowhead and tail of the force vector). Do NOT extend the lines of action for any known forces.

h. Locate and label (if not already labeled) the intersections of the extended lines of action. Label the intersection points with letters.

i. Include all dimensions, angles, etc. that will be required in the numerical solution.

j. Establish and show a sign convention.

2. Develop an equilibrium analysis table directly below the free body diagram.
   a. Begin the equilibrium analysis table by defining a moment equilibrium equation for a location where two unknown force's lines of action intersect. Determine the unknowns in this equation and the action required.
   b. Continue the next rows in the table as described above until a moment equilibrium equation has been established for every intersection point of unknown forces' lines of action.
   c. Define force equilibrium equations in two directions (normally horizontal and vertical), and determine the unknowns and actions for these equations.
   d. Establish an "order of solution" in the last (right-hand) column of the equilibrium analysis table.
   e. Return to the FBD and add any dimensions that need to be determined for use in the equilibrium equations identified above. Perpendicular components can now be added to the FBD if they are to be used in the mathematical solution.

3. Develop and solve the equilibrium equations identified in the equilibrium analysis table following the order of solution (shown in the table) to determine the unknown support reactions.
   a. Use the sign convention shown with the FBD to assign a positive (+) or negative (-) to each force or moment (actions and reactions) in the equilibrium equations. Base the signs (+ or -) given to any unknown reactions on the ASSUMED sense shown on the FBD.
   b. If the calculated value of a reaction is negative (-), the negative symbol indicates that the actual sense of the reaction is **opposite to** the assumed sense shown on the FBD.
   c. If the calculated value of a reaction is positive (+), the positive symbol indicates that the actual sense of the reaction **agrees with** the assumed sense shown on the FBD.

4. Perform at least one calculation to verify the solution values
   a. Substitute the appropriate values for calculated support reactions into any equilibrium equations that were NOT used to develop the values.
   b. You must remember to substitute the entire numerical answer (including the + or – sign) for each calculated support reaction when performing a verification calculation.

The solution procedure outlined above will be used to solve for the support reactions acting on the beams in the following examples (Examples 10-2 and 10-3), and for the hand-written examples that begin on page 10-18 (Examples 10-4 and 10-5).

Example 10-2 A beam is supported by a pin at point A and a cable attached at point B. The beam is loaded as shown below. Calculate the support reactions acting on the beam at points A and B.

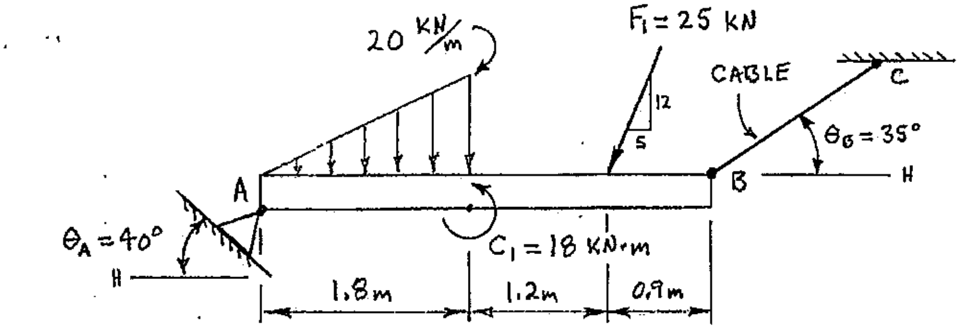

First, a free body diagram is developed for the beam as shown below.

FBD of beam AB:

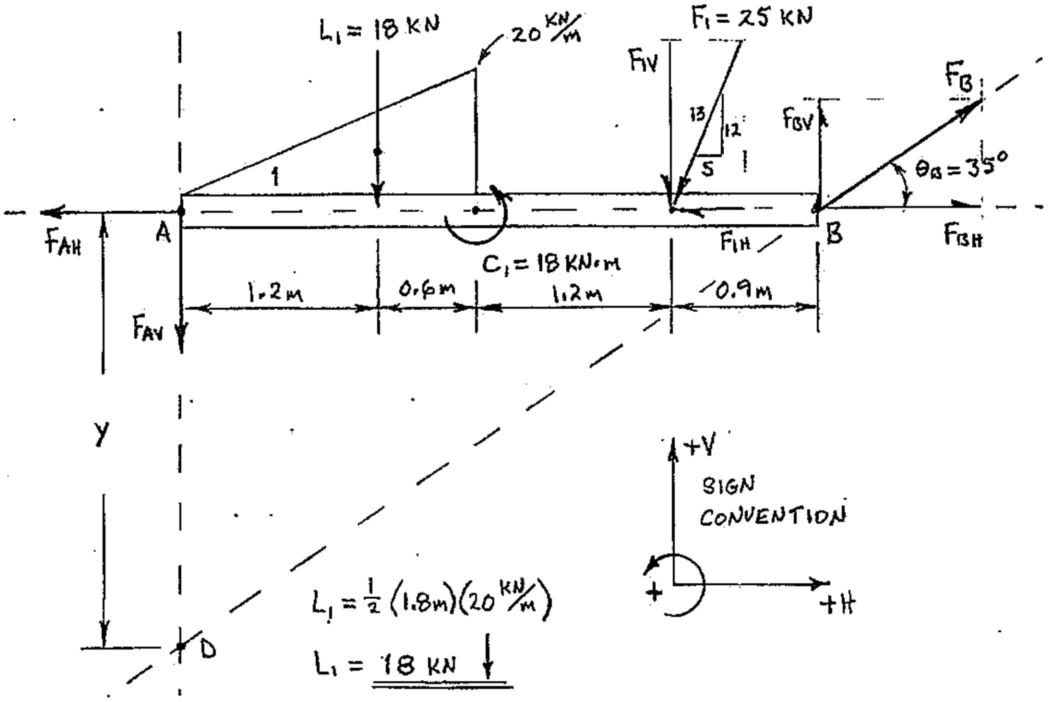

Example 10-2: (cont'd.)

An equilibrium analysis table is developed from the free body diagram, and shown directly after the FBD:

Equilibrium Analysis Table for FBD of beam AB:

Principle	Unknowns	Action	Order of Solution
$\Sigma M_A = 0$	F_B	Solve for F_B using $\Sigma M_A = 0$	1
$\Sigma M_B = 0$	F_{AV}	Solve for F_{AV} using $\Sigma M_B = 0$	2
$\Sigma M_D = 0$	F_{AH}	Solve for F_{AH} using $\Sigma M_D = 0$	3
$\Sigma F_H = 0$	F_{AH}, F_B	None at this time	4 (verify solution)
$\Sigma F_V = 0$	F_{AV}, F_B	None at this time	5 (verify solution)

Next, determine the location of point D (the intersection of F_{AV}'s and F_B's extended lines of action):

$$\tan\theta_B = \frac{opp}{adj} = \frac{y}{AB}$$
$$y = (\tan\theta_B)(AB)$$
$$y = (\tan 35^0)(3.9\,\text{m})$$
$$y = \underline{\underline{2.73081\,\text{m}}}$$

An equilibrium solution can now be done to determine and verify the support reactions, following the established "Order of Solution":

1. Applying static equilibrium by summing moments about point A:

$$\Sigma M_A = 0$$
$$0 = \pm[(F_{AH})(d_\perp)] \pm [(F_{AV})(d_\perp)] \pm [(L_1)(d_\perp)] \pm C_1 \pm [(F_{1H})(d_\perp)] \pm [(F_{1V})(d_\perp)]$$
$$\pm[(F_{BH})(d_\perp)] \pm [(F_{BV})(d_\perp)]$$

$$0 = -[(L_1)(1.2\,\text{m})] + C_1 - \left[\left(\frac{12}{13}\right)(F_1)(3.0\,\text{m})\right] + [(F_B)(\sin\theta_B)(3.9\,\text{m})]$$

$$F_B = \frac{+[(L_1)(1.2\,\text{m})] - C_1 + \left[\left(\frac{12}{13}\right)(F_1)(3.0\,\text{m})\right]}{[(\sin\theta_B)3.9\,\text{m}]}$$

$$F_B = \frac{+[(18\,\text{kN})(1.2\,\text{m})] - 18\text{kN-m} + \left[\left(\frac{12}{13}\right)(25\,\text{kN})(3.0\,\text{m})\right]}{[(\sin 35^0)3.9\,\text{m}]}$$

$$F_B = +\,32.5581\,\text{kN}$$
$$F_B = \underline{\underline{32.5581\,\text{kN}}}$$

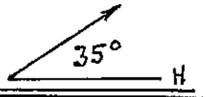

Example 10-2: (cont'd.)

2. Applying static equilibrium by summing moments about point B:

$$\Sigma M_B = 0$$

$$0 = \pm\left[(F_{AH})\cancelto{0}{(d_\perp)}\right] \pm \left[(F_{AV})(d_\perp)\right] \pm \left[(L_1)(d_\perp)\right] \pm C_1 \pm \left[(F_{1H})\cancelto{0}{(d_\perp)}\right] \pm \left[(F_{1V})(d_\perp)\right]$$
$$\pm\left[(F_B)\cancelto{0}{(d_\perp)}\right]$$

$$0 = +\left[(F_{AV})(3.9\text{ m})\right] + \left[(L_1)(2.7\text{ m})\right] + C_1 + \left[\left(\frac{12}{13}\right)(F_1)(0.9\text{ m})\right]$$

$$F_{AV} = \frac{-\left[(L_1)(2.7\text{ m})\right] - C_1 - \left[\left(\frac{12}{13}\right)(F_1)(0.9\text{ m})\right]}{3.9\text{ m}}$$

$$F_{AV} = \frac{-\left[(18\text{ kN})(2.7\text{ m})\right] - 18\text{ kN-m} - \left[\left(\frac{12}{13}\right)(25\text{ kN})(0.9\text{ m})\right]}{3.9\text{ m}}$$

$$F_{AV} = -\,22.4024\text{ kN}$$

$$F_{AV} = \underline{\underline{22.4024\text{ kN}\ \uparrow}}$$

3. Applying static equilibrium by summing moments about point D:

$$\Sigma M_D = 0$$

$$0 = \pm\left[(F_{AH})(d_\perp)\right] \pm \left[(F_{AV})\cancelto{0}{(d_\perp)}\right] \pm \left[(L_1)(d_\perp)\right] \pm C_1 \pm \left[(F_{1H})(d_\perp)\right] \pm \left[(F_{1V})(d_\perp)\right]$$
$$\pm\left[(F_B)\cancelto{0}{(d_\perp)}\right]$$

$$0 = +\left[(F_{AH})(y)\right] - \left[(L_1)(1.2\text{ m})\right] + C_1 + \left[\left(\frac{5}{13}\right)(F_1)(y)\right] - \left[\left(\frac{12}{13}\right)(F_1)(3.0\text{ m})\right]$$

$$F_{AH} = \frac{+\left[(L_1)(1.2\text{ m})\right] - C_1 - \left[\left(\frac{5}{13}\right)(F_1)(y)\right] + \left[\left(\frac{12}{13}\right)(F_1)(3.0\text{ m})\right]}{y}$$

$$F_{AH} = \frac{+\left[(18\text{ kN})(1.2\text{ m})\right] - 18\text{ kN-m} - \left[\left(\frac{5}{13}\right)(25\text{ kN})(2.73081\text{ m})\right] + \left[\left(\frac{12}{13}\right)(25\text{ kN})(3.0\text{ m})\right]}{2.73081\text{ m}}$$

$$F_{AH} = +\,17.0546\text{ kN}$$

$$F_{AH} = \underline{\underline{17.0546\text{ kN}\ \leftarrow}}$$

cont'd.

Example 10-2: (cont'd.)

4. Verify support reactions using $\Sigma F_H = 0$:

$$\Sigma F_H = 0$$
$$0 = \pm F_{AH} \pm L_{1H} \pm F_{1H} \pm F_{BH}$$
$$0 = -F_{AH} - \left(\frac{5}{13}\right)(F_1) + (F_B)(\cos\theta_B)$$
$$0 = -(+17.0546\ \text{kN}) - \left(\frac{5}{13}\right)(25\ \text{kN}) + (+32.5581\ \text{kN})(\cos 35^\circ)$$
$$0 = -17.0546\ \text{kN} - 9.61539\ \text{kN} + 26.6700\ \text{kN}$$
$$\underline{\underline{0 = 0}} \qquad \text{(support reactions are OK)}$$

5. Verify support reactions using $\Sigma F_V = 0$:

$$\Sigma F_V = 0$$
$$0 = \pm F_{AV} \pm L_{1V} \pm F_{1V} \pm F_{BV}$$
$$0 = -F_{AV} - L_1 - \left(\frac{12}{13}\right)(F_1) + (F_B)(\sin\theta_B)$$
$$0 = -(-22.4024\ \text{kN}) - 18\ \text{kN} - \left(\frac{12}{13}\right)(25\ \text{kN}) + (+32.5581\ \text{kN})(\sin 35^\circ)$$
$$0 = +22.4024\ \text{kN} - 18\ \text{kN} - 23.0769\ \text{kN} + 18.6746\ \text{kN}$$
$$\underline{\underline{0 = 0}} \qquad \text{(support reactions are OK)}$$

<u>ANSWER</u>:

$F_{AH} = 17.05$ kN ←

$F_{AV} = 22.40$ kN ↑

$F_B = 32.56$ kN

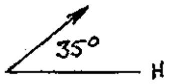

Example 10-3 The wind loads on a flagpole are estimated by the distributed load shown below. The concentrated forces F_1 and F_2 are a result of the wind loads on the flag being transferred to the pole at the flag's upper and lower attachment points. The flagpole is made from a 6-in diameter standard weight steel pipe, and the total weight of the pipe is assumed to act as a single concentrated force that passes through the centroid of the pipe. Determine the support reactions at the base of the flagpole (location A).

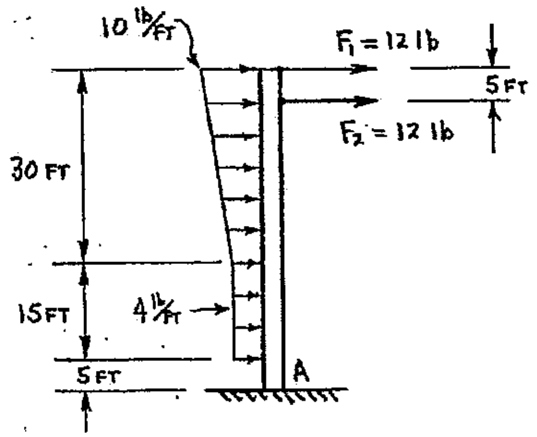

A free body diagram of the flagpole is shown below. The unit weight (18.97 lb/ft) of the 6-in standard weight pipe was found in the Appendix, Table B5.

FBD OF FLAGPOLE:

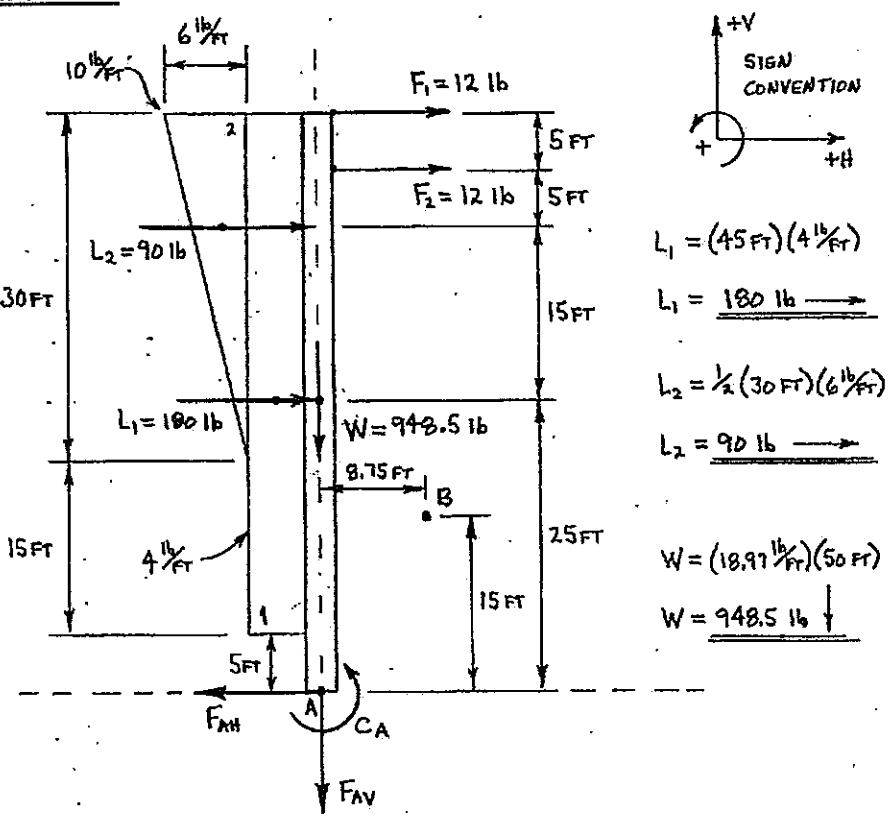

Example 10-3: (cont'd.)

An equilibrium analysis table is developed from the free body diagram, and shown directly after the FBD:

Equilibrium Analysis Table for FBD of Flagpole:

Principle	Unknowns	Action	Order of Solution
$\Sigma M_A = 0$	C_A	Solve for C_A using $\Sigma M_A = 0$	1
$\Sigma F_H = 0$	F_{AH}	Solve for F_{AH} using $\Sigma F_H = 0$	2
$\Sigma F_V = 0$	F_{AV}	Solve for F_{AV} using $\Sigma F_V = 0$	3
$\Sigma M_B = 0$	C_A, F_{AH}, F_{AV}	None at this time	4 (verify solution)

An equilibrium solution can now be done to determine and verify the support reactions, following the established "Order of Solution":

1. Applying static equilibrium by summing moments about point A:

$$\Sigma M_A = 0$$
$$0 = \pm C_A \pm [(F_{AH})(\cancelto{0}{d_\perp})] \pm [(F_{AV})(\cancelto{0}{d_\perp})] \pm [(L_1)(d_\perp)] \pm [(L_2)(d_\perp)] \pm [(W)(\cancelto{0}{d_\perp})]$$
$$\pm [(F_1)(d_\perp)] \pm [(F_2)(d_\perp)]$$
$$0 = + C_A - [(L_1)(25\text{ ft})] - [(L_2)(40\text{ ft})] - [(F_1)(50\text{ ft})] - [(F_2)(45\text{ ft})]$$
$$C_A = + [(L_1)(25\text{ ft})] + [(L_2)(40\text{ ft})] + [(F_1)(50\text{ ft})] + [(F_2)(45\text{ ft})]$$
$$C_A = + [(180\text{ lb})(25\text{ ft})] + [(90\text{ lb})(40\text{ ft})] + [(12\text{ lb})(50\text{ ft})] + [(12\text{ lb})(45\text{ ft})]$$
$$C_A = +4500\text{ lb-ft} + 3600\text{ lb-ft} + 600\text{ lb-ft} + 540\text{ lb-ft}$$
$$C_A = +9240\text{ lb-ft}$$
$$C_A = \underline{\underline{9240\text{ lb-ft} \circlearrowleft}}$$

2. Applying static equilibrium by summing forces in the horizontal direction:

$$\Sigma F_H = 0$$
$$0 = \pm F_{AV} \pm L_{1H} \pm L_{2H} \pm \cancelto{0}{W_H} \pm F_{1H} \pm F_{2H}$$
$$0 = -F_{AH} + L_1 + L_2 + F_1 + F_2$$
$$F_{AH} = + L_1 + L_2 + F_1 + F_2$$
$$F_{AH} = +180\text{ lb} + 90\text{ lb} + 12\text{ lb} + 12\text{ lb}$$
$$F_{AH} = +294.0\text{ lb}$$
$$F_{AH} = \underline{\underline{294.0\text{ lb} \leftarrow}}$$

cont'd.

Example 10-3: (cont'd.)

3. Applying static equilibrium by summing moments in the vertical direction:

$$\Sigma F_V = 0$$
$$0 = \pm F_{AV} \pm \cancel{L_{1V}}^{0} \pm \cancel{L_{2V}}^{0} \pm W_V \pm \cancel{F_{1V}}^{0} \pm \cancel{F_{2V}}^{0}$$
$$0 = -F_{AV} - W$$
$$F_{AV} = -W$$
$$F_{AV} = -948.5\text{ lb}$$
$$F_{AV} = \underline{\underline{948.5\text{ lb} \ \uparrow}}$$

4. Verify solution using $\Sigma M_B = 0$:

$$\Sigma M_B = 0$$
$$0 = \pm C_A \pm[(F_{AH})(d_\perp)] \pm[(F_{AV})(d_\perp)] \pm[(L_1)(d_\perp)] \pm[(L_2)(d_\perp)] \pm[(W)(d_\perp)]$$
$$\pm[(F_1)(d_\perp)] \pm[(F_2)(d_\perp)]$$
$$0 = +C_A - [(F_{AH})(15\text{ ft})] + [(F_{AV})(8.75\text{ ft})] - [(L_1)(10\text{ ft})] - [(L_2)(25\text{ ft})]$$
$$+[(W)(8.75\text{ ft})] - [(F_1)(35\text{ ft})] - [(F_2)(30\text{ ft})]$$
$$0 = +(+9240\text{ lb-ft}) - [(+294.0\text{ lb})(15\text{ ft})] + [(-948.5\text{ lb})(8.75\text{ ft})] - [(180\text{ lb})(10\text{ ft})]$$
$$-[(90\text{ lb})(25\text{ ft})] + [(948.5\text{ lb})(8.75\text{ ft})] - [(12\text{ lb})(35\text{ ft})] - [(12\text{ lb})(30\text{ ft})]$$
$$0 = +9240\text{ lb-ft} - 4410\text{ lb-ft} - 8299.38\text{ lb-ft} - 1800\text{ lb-ft} - 2250\text{ lb-ft} + 8299.38\text{ lb-ft}$$
$$-420\text{ lb-ft} - 360\text{ lb-ft}$$
$$\underline{\underline{0 = 0}} \qquad \text{(support reactions are OK)}$$

ANSWER:
F_{AH} = 294.0 lb ←
F_{AV} = 948.5 lb ↑
C_A = 9240 lb-ft ↺

Summary

Simply supported beams, overhanging beams and cantilever beams are examples of three common types of support conditions used for beams. Beams can be loaded with any combination of concentrated loads, applied couples and distributed loads.

Distributed loads are loads that act continuously over a long but very narrow area (such as the top or bottom surface of a beam). Distributed loads are represented as an area composed of parallel arrows (the arrows represent the direction and sense of the distributed load. Units for a distributed load are force per unit length (lb/ft, kN/m, etc.). Constant distributed loads and linear varying distributed loads are two common loading conditions. Distributed loads are shown on free body diagrams as a single concentrated force that represents the magnitude of the effect of a distributed load. The single concentrated effect must pass through the centroid of the area (shown as an outline of the original distributed load) used to describe the distributed load and must have the same direction and sense as the original distributed load.

The support reactions for beams are determined based on the principles of static equilibrium (Σ F = 0 and Σ M = 0), using a solution procedure very similar to that shown in Chapter 8 (Support Reactions and Free Body Diagrams). A free body diagram is developed, with all acting loads and support reactions modeled correctly. The FBD is followed by an equilibrium analysis table, a numerical equilibrium solution for each support reactions, and then at least one final equilibrium equation is solved to verify the solution.

FURTHER EXAMPLE PROBLEMS (solutions in GFSA format are on the following pages)

Example 10-4 An overhanging beam is loaded as shown below. Determine all support reactions acting on the beam.

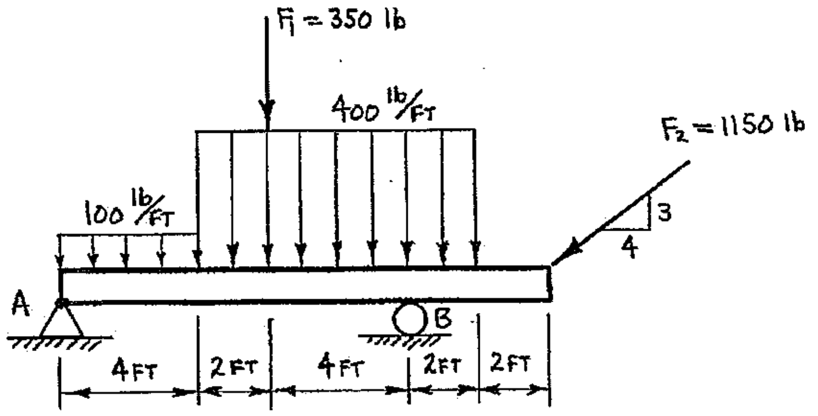

Example 10-5 A W24 X 104 cantilever beam is loaded as shown below. Calculate all support reactions acting on the beam. INCLUDE THE BEAM WEIGHT.

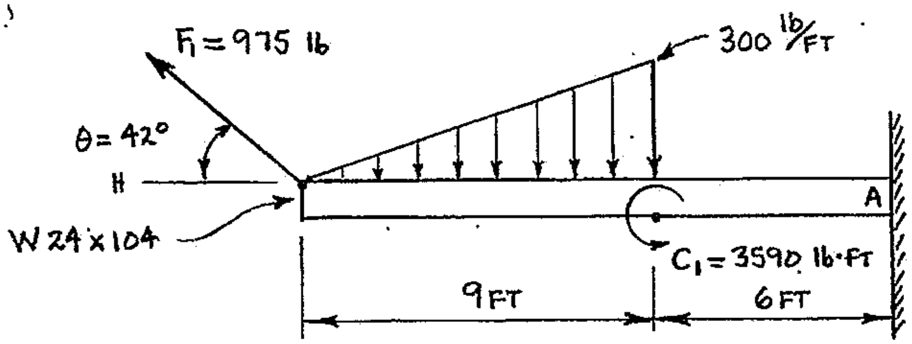

PROBLEM: EXAMPLE 10-4

GIVEN: AN OVERHANGING BEAM IS LOADED AS SHOWN BELOW.

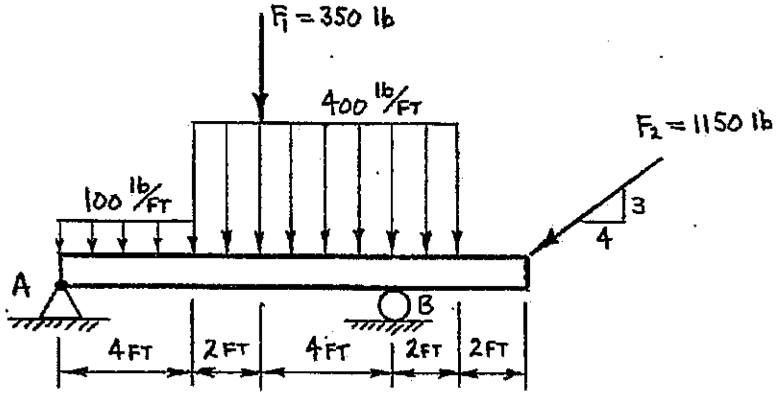

FIND: DETERMINE ALL SUPPORT REACTIONS ACTING ON THE BEAM.

SOLUTION:

FBD OF BEAM AB:

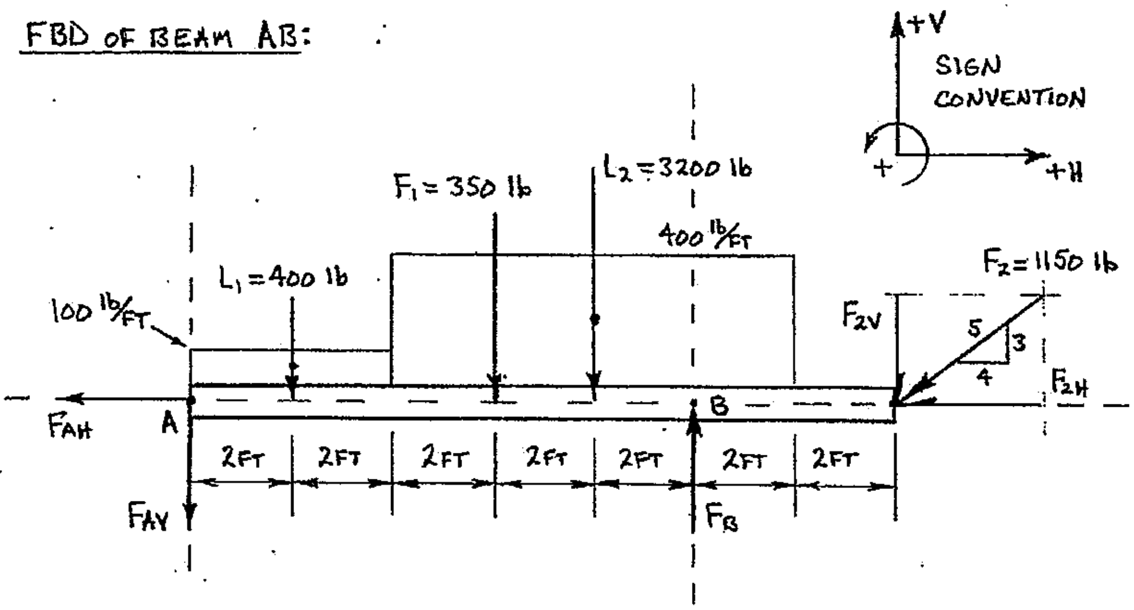

EQUILIBRIUM ANALYSIS TABLE FOR FBD OF BEAM AB:

PRINCIPLE	UNKNOWNS	ACTION	ORDER OF SOLUTION
$\Sigma M_A = 0$	F_B	SOLVE FOR F_B USING $\Sigma M_A = 0$	1
$\Sigma M_B = 0$	F_{AV}	SOLVE FOR F_{AV} USING $\Sigma M_B = 0$	2
$\Sigma F_H = 0$	F_{AH}	SOLVE FOR F_{AH} USING $\Sigma F_H = 0$	3
$\Sigma F_V = 0$	F_{AV}, F_B	NONE AT THIS TIME	4 (VERIFY SOLUTION)

CONT'D.

PROBLEM: EXAMPLE 10-4 (CONT'D.)

1. APPLYING STATIC EQUILIBRIUM BY SUMMING MOMENTS ABOUT POINT A:

$$\Sigma M_A = 0$$

$$0 = \pm[(F_{AH})(d\perp)^{\,0}] \pm [(F_{AV})(d\perp)^{\,0}] \pm [(L_1)(d\perp)] \pm [(F_1)(d\perp)] \pm [(L_2)(d\perp)]$$
$$\pm[(F_B)(d\perp)] \pm [(F_{2H})(d\perp)^{\,0}] \pm [(F_{2V})(d\perp)]$$

$$0 = -[(L_1)(2FT)] - [(F_1)(6FT)] - [(L_2)(8FT)] + [(F_B)(10FT)] - [(3/5)(F_2)(14FT)]$$

$$F_B = \frac{+[(L_1)(2FT)] + [(F_1)(6FT)] + [(L_2)(8FT)] + [(3/5)(F_2)(14FT)]}{10\ FT}$$

$$F_B = \frac{+[(400\ lb)(2FT)] + [(350\ lb)(6FT)] + [(3200\ lb)(8FT)] + [(3/5)(1150\ lb)(14\ FT)]}{10\ FT}$$

$$F_B = +\ 3816.00\ lb$$

$$F_B = \underline{\underline{3816.00\ lb\ \uparrow}}$$

2. APPLYING STATIC EQUILIBRIUM BY SUMMING MOMENTS ABOUT POINT B:

$$\Sigma M_B = 0$$

$$0 = \pm[(F_{AH})(d\perp)^{\,0}] \pm [(F_{AV})(d\perp)] \pm [(L_1)(d\perp)] \pm [(F_1)(d\perp)] \pm [(L_2)(d\perp)]$$
$$\pm[(F_B)(d\perp)^{\,0}] \pm [(F_{2H})(d\perp)^{\,0}] \pm [(F_{2V})(d\perp)]$$

$$0 = +[(F_{AV})(10FT)] + [(L_1)(8FT)] + [(F_1)(4FT)] + [(L_2)(2FT)] - [(3/5)(F_2)(4FT)]$$

$$F_{AV} = \frac{-[(L_1)(8FT)] - [(F_1)(4FT)] - [(L_2)(2FT)] + [(3/5)(F_2)(4FT)]}{10\ FT}$$

$$F_{AV} = \frac{-[(400\ lb)(8FT)] - [(350\ lb)(4FT)] - [(3200\ lb)(2FT)] + [(3/5)(1150\ lb)(4FT)]}{10\ FT}$$

$$F_{AV} = -\ 824.000\ lb$$

$$F_{AV} = \underline{\underline{824.000\ lb\ \uparrow}}$$

CONT'D.

PROBLEM: EXAMPLE 10-4 (CONT'D.)

3. APPLYING STATIC EQUILIBRIUM BY SUMMING FORCES IN THE H-DIRECTION:

$\Sigma F_H = 0$

$0 = \pm F_{AH} \pm L_{1H} \pm F_{1H} \pm L_{2H} \pm F_{BH} \pm F_{2H}$ (with L_{1H}, F_{1H}, L_{2H}, F_{BH} crossed out → 0)

$0 = -F_{AH} - (4/5)F_2$

$F_{AH} = -(4/5)F_2$

$F_{AH} = -(4/5)(1150\ lb)$

$F_{AH} = -920.000\ lb$

$F_{AH} = 920.000\ lb \longrightarrow$

4. VERIFY SOLUTION USING $\Sigma F_V = 0$

$\Sigma F_V = 0$

$0 = \pm F_{AV} \pm L_{1V} \pm F_{1V} \pm L_{2V} \pm F_B \pm F_{2V}$

$0 = -F_{AV} - L_1 - F_1 - L_2 + F_B - (3/5)F_V$

$0 = -(-824.000\ lb) - 400\ lb - 350\ lb - 3200\ lb + (+3816.00\ lb) - (3/5)(1150\ lb)$

$0 = +824,000\ lb - 400\ lb - 350\ lb - 3200\ lb + 3816,00\ lb - 690,000\ lb$

$0 = 0$ (SUPPORT REACTIONS ARE OK)

ANSWER:

$F_{AH} = 920.0\ lb \longrightarrow$

$F_{AV} = 824.0\ lb \uparrow$

$F_B = 3816\ lb \uparrow$

PROBLEM: EXAMPLE 10-5

GIVEN: A W24 x 104 CANTILEVER BE IS LOADED AS SHOWN BELOW.

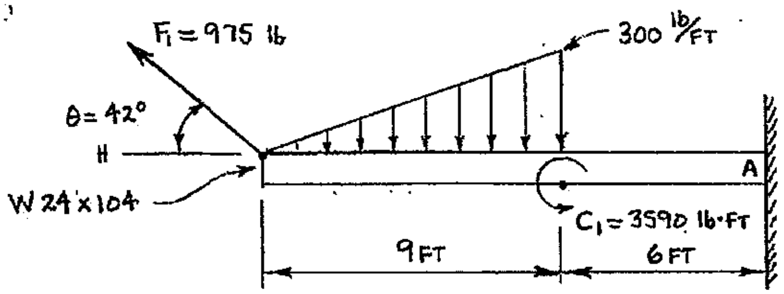

FIND: DETERMINE ALL SUPPORT REACTIONS ACTING ON THE BEAM. INCLUDE THE BEAM WEIGHT.

SOLUTION:

FBD OF BEAM:

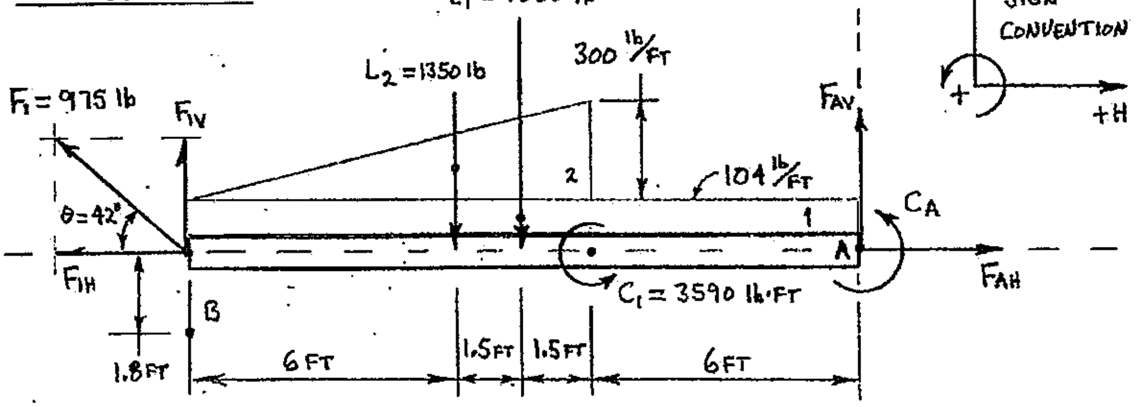

$L_1 = (15\text{ FT})(104\text{ lb/FT})$

$L_1 = \underline{1560\text{ lb}} \downarrow$

$L_2 = \frac{1}{2}(9\text{ FT})(300\text{ lb/FT})$

$L_2 = \underline{1350\text{ lb}} \downarrow$

EQUILIBRIUM ANALYSIS TABLE FOR FBD BEAM:

PRINCIPLE	UNKNOWNS	ACTION	ORDER OF SOLUTION
$\Sigma M_A = 0$	C_A	SOLVE FOR C_A USING $\Sigma M_A = 0$	1
$\Sigma F_H = 0$	F_{AH}	SOLVE FOR F_{AH} USING $\Sigma F_H = 0$	2
$\Sigma F_V = 0$	F_{AV}	SOLVE FOR F_{AV} USING $\Sigma F_V = 0$	3
$\Sigma M_B = 0$	F_{AH}, F_{AV}, C_A	NONE AT THIS TIME	4 (VERIFY SOLUTION)

CONT'D.

PROBLEM: EXAMPLE 10-5 (CONT'D.)

1. APPLYING STATIC EQUILIBRIUM BY SUMMING MOMENTS ABOUT POINT A:

$\Sigma M_A = 0$

$0 = \pm[(F_{1H})(d\perp)] \pm [(F_{1V})(d\perp)] \pm [(L_2)(d\perp)] \pm [(L_1)(d\perp)] \pm C_1 \pm C_A \pm [(F_{AH})(d\perp)]$
$\pm[(F_{AV})(d\perp)]$

(the $d\perp$ terms for F_{1H}, F_{AH} and F_{AV} are struck through and marked 0)

$0 = -[(F_1 \sin\theta)(15\text{ FT})] + [(L_2)(9\text{ FT})] + [(L_1)(7.5\text{ FT})] + C_1 + C_A$

$C_A = +[(F_1 \sin\theta)(15\text{ FT})] - [(L_2)(9\text{ FT})] - [(L_1)(7.5\text{ FT})] - C_1$

$C_A = +[(975\text{ lb})(\sin 42^\circ)(15\text{ FT})] - [(1350\text{ lb})(9\text{ FT})] - [(1560\text{ lb})(7.5\text{ FT})] - 3590\text{ lb}\cdot\text{FT}$

$C_A = +9786.04\text{ lb}\cdot\text{FT} - 12{,}150.0\text{ lb}\cdot\text{FT} - 11{,}700.0\text{ lb}\cdot\text{FT} - 3590\text{ lb}\cdot\text{FT}$

$C_A = -17{,}653.96\text{ lb}\cdot\text{FT}$

$C_A = \underline{17{,}653.96\text{ lb}\cdot\text{FT}}$ ↻ (counterclockwise)

2. APPLYING STATIC EQUILIBRIUM BY SUMMING FORCES IN THE H-DIRECTION:

$\Sigma F_H = 0$

$0 = \pm F_{1H} \pm L_{2H} \pm L_{1H} \pm F_{AH}$

(the L_{2H} and L_{1H} terms are struck through and marked 0)

$0 = -F_1\cos\theta + F_{AH}$

$F_{AH} = +F_1\cos\theta$

$F_{AH} = +(975\text{ lb})(\cos 42^\circ)$

$F_{AH} = +724.566\text{ lb}$

$F_{AH} = \underline{724.566\text{ lb}} \longrightarrow$

CONT'D.

PROBLEM: EXAMPLE 10-5 (CONT'D.)

3. APPLYING STATIC EQUILIBRIUM BY SUMMING FORCES IN THE Y-DIRECTION:

$\Sigma F_V = 0$

$0 = \pm F_{1V} \pm L_{2V} \pm L_{1V} \pm F_{AV}$

$0 = +F_1 \sin\theta - L_2 - L_1 + F_{AV}$

$F_{AV} = -F_1 \sin\theta + L_2 + L_1$

$F_{AV} = -(975\ lb)(\sin 42^\circ) + 1350\ lb + 1560\ lb$

$F_{AV} = -652.402\ lb + 1350\ lb + 1560\ lb$

$F_{AV} = +2257.598\ lb$

$F_{AV} = 2257.598\ lb \uparrow$

4. VERIFY SOLUTION USING $\Sigma M_B = 0$:

$\Sigma M_B = 0$

$0 = \pm[(F_{1H})(d\perp)] \pm [(F_{1V})(d\perp)]^{\,0} \pm [(L_2)(d\perp)] \pm [(L_1)(d\perp)] \pm C_1 \pm C_A \pm [(F_{AH})(d\perp)]$
$\pm [(F_{AV})(d\perp)]$

$0 = +[(F_1 \cos\theta)(1.8\ FT)] - [(L_2)(6\ FT)] - [(L_1)(7.5\ FT)] + C_1 + C_A - [(F_{AH})(1.8\ FT)]$
$+[(F_{AV})(15\ FT)]$

$0 = +[(975\ lb)(\cos 42^\circ)(1.8\ FT)] - [(1350\ lb)(6\ FT)] - [(1560\ lb)(7.5\ FT)] + 3590\ lb\cdot FT$
$+(-17{,}653.96\ lb\cdot FT) - [(+724.566\ lb\cdot FT)(1.8\ FT)] + [(+2257.598\ lb)(15\ FT)]$

$0 = +1304.22\ lb\cdot FT - 8100.00\ lb\cdot FT - 11{,}700\ lb\cdot FT + 3590\ lb\cdot FT - 17{,}653.96\ lb\cdot FT$
$-1304.22\ lb\cdot FT + 33{,}863.97\ lb\cdot FT$

$0 = 0$ (SUPPORT REACTIONS ARE OK)

ANSWER:
- $F_{AH} = 724.6\ lb \rightarrow$
- $F_{AV} = 2258\ lb \uparrow$
- $C_A = 17{,}650\ lb\cdot FT$ ↻

PRACTICE PROBLEMS

10.1 An overhanging beam is loaded as shown below. Calculate all support reactions acting on the beam at locations A and B.

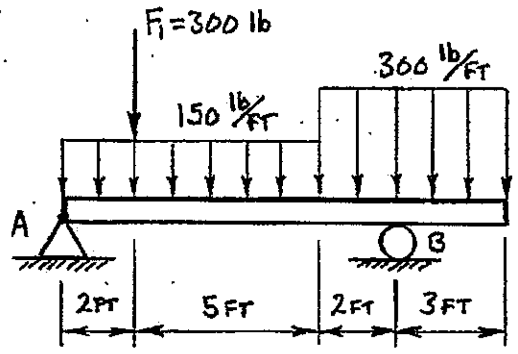

10.2 The beam shown below is supported by a pin at location A and a smooth surface at location B. Determine all support reactions acting on the beam.

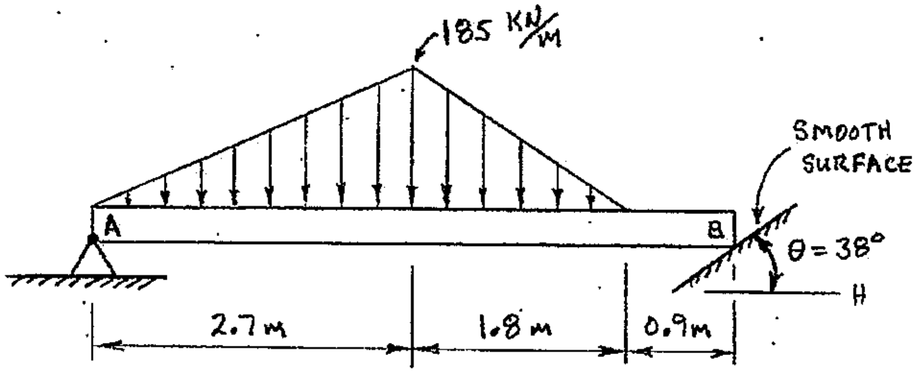

10.3 An S18 X 70 cantilever beam is loaded as shown below. Calculate all support reactions acting on the beam. **Include the beam weight in your calculations.**

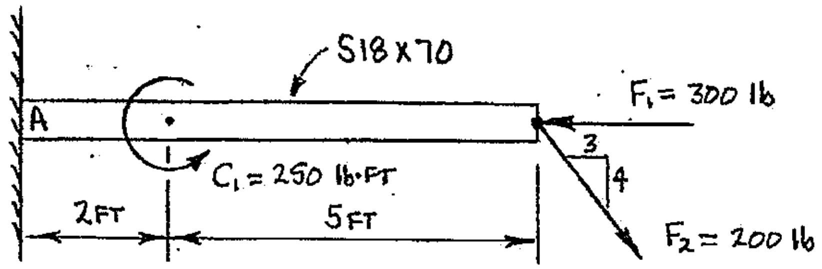

Practice Problems

10.4 An overhanging beam is loaded as shown below. Determine all support reactions acting on the beam at locations A and B.

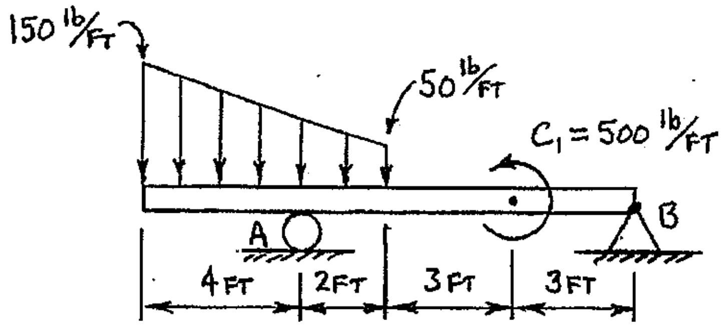

10.5 A simply supported beam is loaded as shown below. Calculate all support reactions acting on the beam.

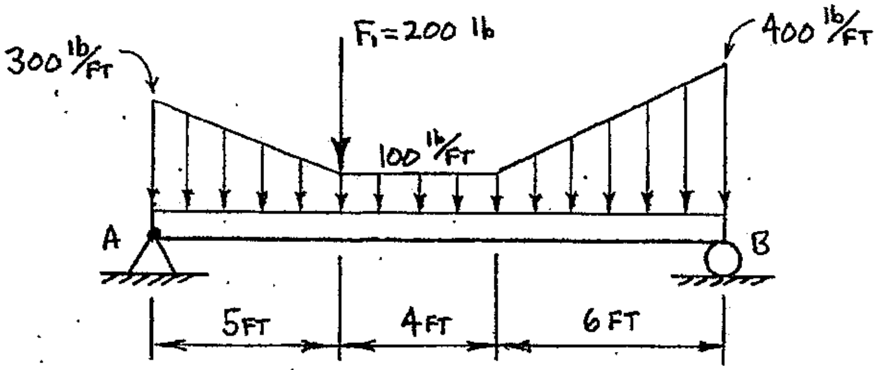

10.6 A cantilever beam is loaded as shown below. Calculate all support reactions acting on the beam.

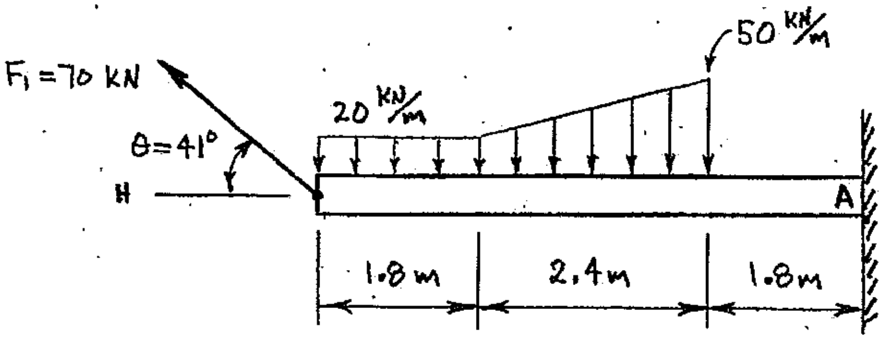

PRACTICE PROBLEMS:

10.7 A simply supported beam is loaded as shown below. Calculate all support reactions acting on the beam at locations A and B.

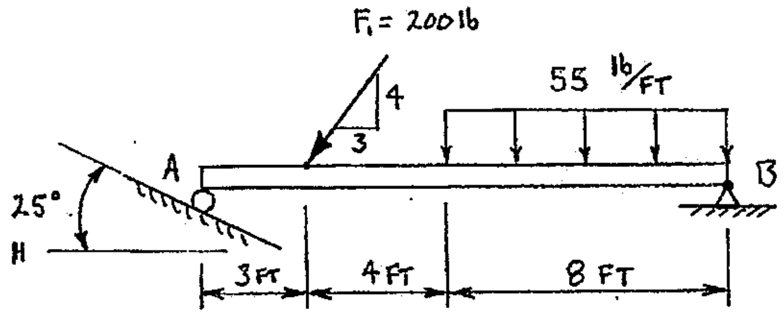

10.8 A cantilever beam is loaded as shown below. Calculate all support reactions acting on the beam.

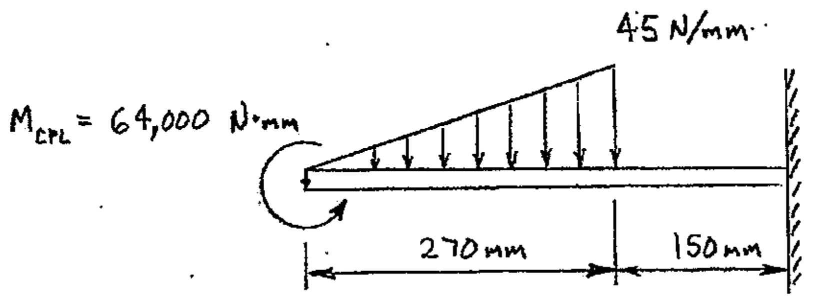

10.9 An overhanging beam is loaded as shown below. Calculate all support reactions acting on the beam at locations A and B. **Include the beam weight in your calculations.**

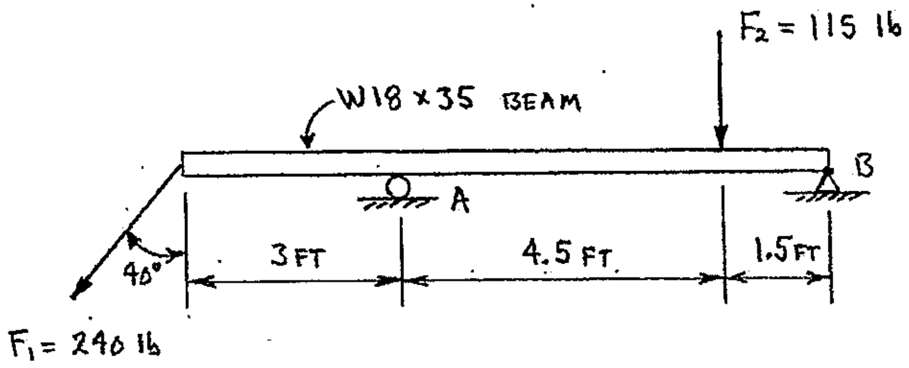

PRACTICE PROBLEMS:

10.10 A W21 X 50 steel wide-flange I-beam is supported by a pin at A, and a cable that extends from B to C. Determine all support reactions acting on the beam based on the loading shown below. **Include the beam weight in your calculations.**

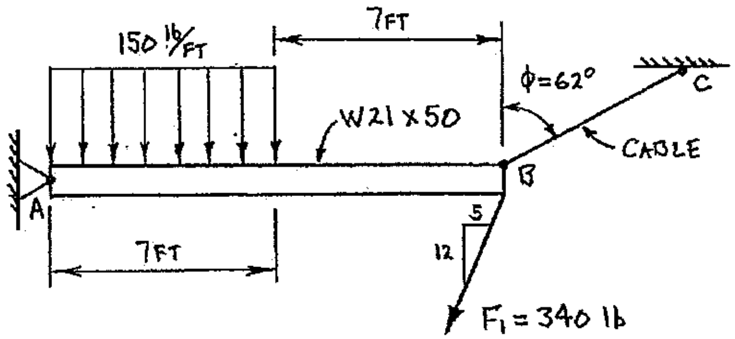

10.11 A vertical pole is fixed at its base and loaded as shown below. Determine all support reactions acting on the pole.

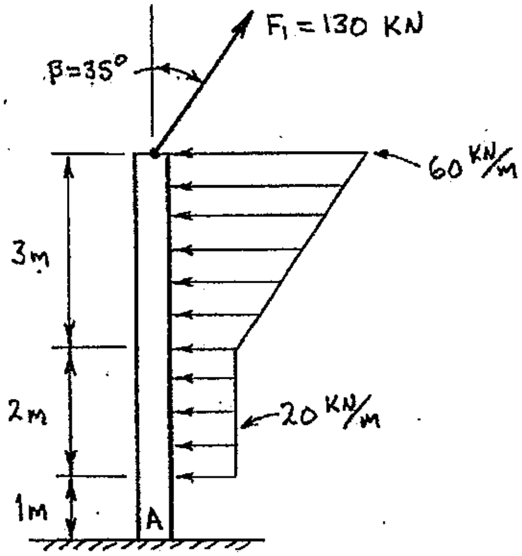

This page intentionally left blank.

CHAPTER 11: STATIC EQUILIBRIUM: FRAMES AND MACHINES

FRAMES AND MACHINES

Frames and machines are two common types of structures that contain at least one multi-force member. Frames and machines are often constructed from elements (beams, bars, structural shapes, etc.) that are connected with pin joints. Frame and machine analysis problems normally involve calculating the support reactions and/or the reactions that occur where members are joined.

A ***frame*** is normally a rigid structure with no relative motion among its members. Frames are typically used to transfer loads (forces and/or couples) from their points of application to the structure's supports.

A ***machine*** typically has some moving parts so that relative motion can occur between its members. However, machines are typically analyzed in a fixed (static) position. Machines are normally used to transmit or modify loads. For example, pliers could be used to amplify an applied force. Levers are used to both amplify and change the direction of an applied force. A force applied to the handle of a wrench results in a torque that is applied to a nut or bolt.

MULTI-FORCE MEMBERS

A ***multi-force member*** is any member in a machine or frame that has forces applied at three or more different locations. Couples may also be applied to multi-force members. Member BC of the frame shown in Figure 11-2 (page 11-2) is a multi-force member.

TWO-FORCE MEMBERS

Frames and machines may also contain some ***two-force members***. The characteristics of a two-force member are shown below:

1. There can be only two pins in the member.
2. All forces are applied at the pins.
3. There can be no couples acting on the member.
4. The resultant of the forces applied at either pin will have a line of action that passes through both pins.

The first three items in the list above are used to identify a two-force member. If a member has two (and only two) pins, all forces are applied at the pins, and there are no couples applied to the member then that member is a two-force member. A two-force member can be of any shape, straight, curved, triangular, irregular, etc., and the two pins can be in any location on the two-force member (see Figure 11-1, following page).

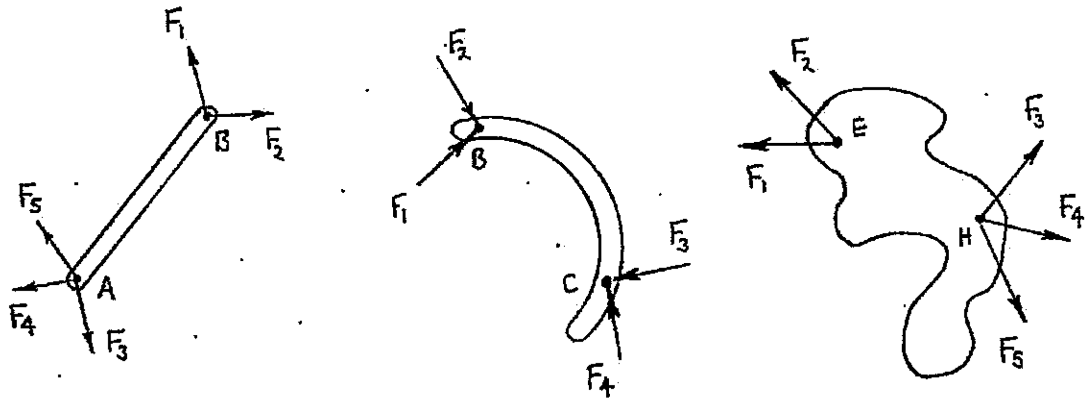

Figure 11-1 Various two-force members

The fourth characteristic of a two-force member (previous page) is used for problem solving, after a two-force member has been identified. Basically, the 4th characteristic means that ***the resultant forces at the pins of a two-force member have known lines of action, and their lines of action are collinear.*** Pin reactions are normally modeled as vertical and horizontal components (two unknowns) on a free body diagram. However, since the resultant force at the pin of a two-force member has a known line of action, the pin reaction could also be modeled as a single force (only one unknown) with a ***known*** line of action. Since identification of two-force members can lead to a lower number of unknowns on free body diagrams, it is very important to identify any, and all, two-force members in frame and machine problems prior to constructing any free body diagrams.

The frame shown in Figure 11-2 is constructed from members AC and BC, which are connected by a pin at location C. Member AC can be identified as a two-force member since it has two pins, all forces (reactions in this case) are applied at the pins, and there are no applied couples on AC. Member BD is a multi-force member due to the force F_1 that is being applied at its right end.

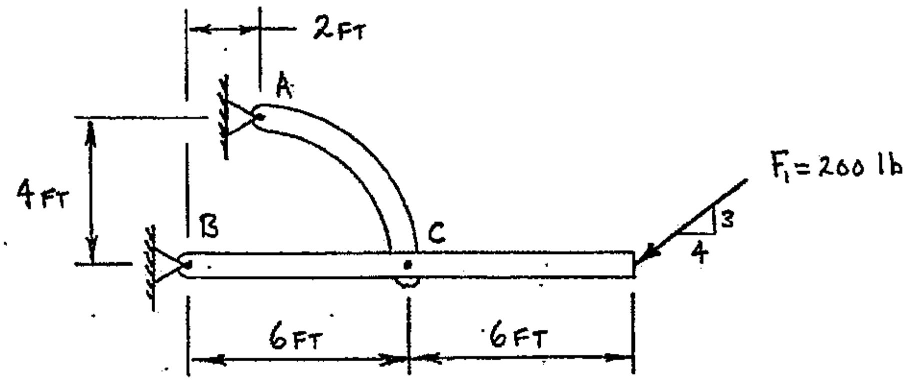

FIGURE 11-2 Frame with load applied as shown.

Two different free body diagrams could be shown of the entire frame (Figure 11-2, previous page), with the only difference being in how the support reaction at pin A is modeled. The FBD in Figure 11-3 shows the support at A modeled as a normal pin (vertical and horizontal force components). Note that there are <u>four</u> unknown reaction forces (F_{AH}, F_{AV}, F_{BH} and F_{BV}) and there are <u>four</u> points (A, B, D and E) where the lines of actions of the unknown forces intersect.

<u>FBD OF ENTIRE FRAME</u>:

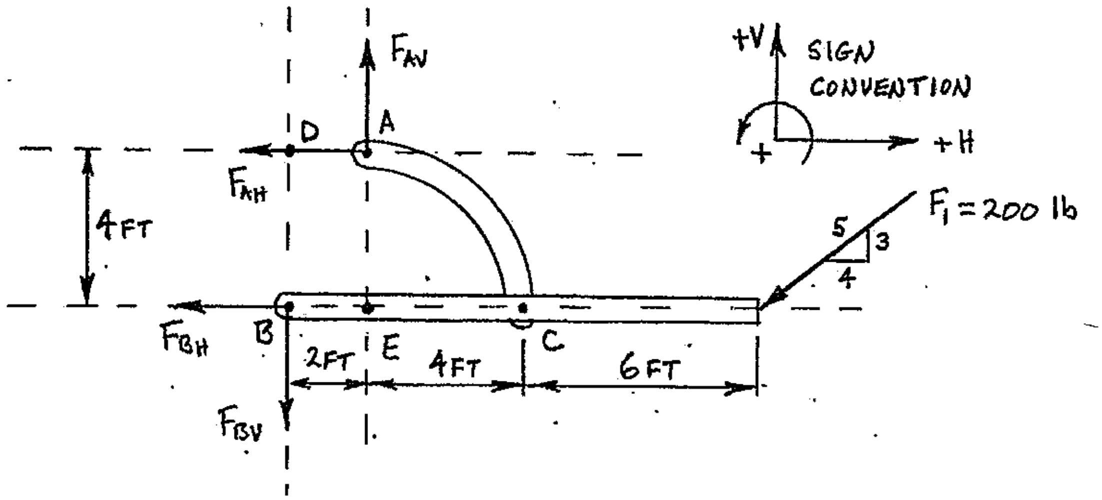

<u>EQUILIBRIUM ANALYSIS TABLE FOR FBD OF ENTIRE FRAME</u>:

Principle:	Unknowns:	Action:	Order of solution:
$\Sigma M_A = 0$	F_{BH}, F_{BV}	None at this time	?
$\Sigma M_B = 0$	F_{AH}, F_{BV}	None at this time	?
$\Sigma M_D = 0$	F_{AV}, F_{BH}	None at this time	?
$\Sigma M_E = 0$	F_{AH}, F_{BV}	None at this time	?
$\Sigma F_H = 0$	F_{AH}, F_{BH}	None at this time	?
$\Sigma F_V = 0$	F_{AV}, F_{BV}	None at this time	?

FIGURE 11-3 FBD of frame shown in Figure 11-2

From the equilibrium analysis, it can be seen that there are no direct solutions for any of the four unknown reaction forces. Additional free body diagrams of the individual frame members would be required to solve for the unknown support reactions. This FBD of the entire frame **DOES NOT** take into account that AC is a two-force member.

The FBD shown in Figure 11-4 (following page) <u>**DOES**</u> take into account that member AC is a two-force member. The reaction at pin A is modeled as a single reaction force (F_A) with a known direction (the line of action of F_A must pass through both pins of two-force member AC). There are only three unknowns on this FBD, so all of the unknown reactions can be calculated based on the free body diagram of the entire frame. F_A can be found by summing moments equal to zero about point B,

F_{BV} can be calculated by summing moments equal to zero about point C, and F_{BH} can be found by summing moments equal to zero with respect to point G. F_A can then be resolved into its vertical and horizontal components. It is **VERY** important to extend the lines of action for all unknowns to help locate points to use for moment equilibrium equations.

FBD OF ENTIRE FRAME:

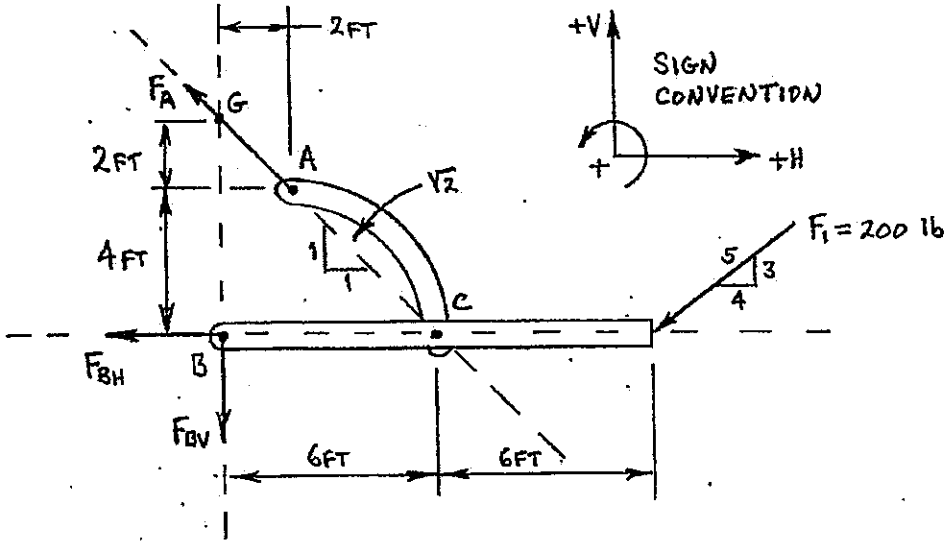

EQUILIBRIUM ANALYSIS FOR FBD OF ENTIRE FRAME:

Principle:	Unknowns:	Action:	Order of Solution:
$\Sigma M_B = 0$	F_A	Solve for F_A using $\Sigma M_B = 0$	1
$\Sigma M_C = 0$	F_{BV}	Solve for F_{BV} using $\Sigma M_C = 0$	2
$\Sigma M_G = 0$	F_{BH}	Solve for F_{BH} using $\Sigma M_G = 0$	3
$\Sigma F_H = 0$	F_A, F_{BH}	None at this time	4 (Verify solution)
$\Sigma F_V = 0$	F_A, F_{BV}	None at this time	5 (Verify solution)

FIGURE 11-4 FBD of frame shown in Figure 11-2; the reaction at pin A is shown as a single force with a known line of action since AC was identified as a two-force member.

SOLUTION PROCEDURE FOR FRAMES AND MACHINES

The support reactions for frames and machines, and/or for the reactions at locations where members are joined, are found using the same basic methods developed for any object that is in static equilibrium. First, a complete free body diagram (FBD) is developed for the object. In this case, the object could be the entire frame (or machine), a single member within the frame, or maybe multiple frame members. Then the principles of static equilibrium (Σ F = 0 and Σ M = 0) are applied to the FBD and the relevant equilibrium equations are developed and solved for the unknown reactions.

Frames and machines normally are constructed from multiple members, and the reactions at locations (pins) where members are joined are usually required when designing the individual members and the pinned connections. So, multiple free body diagrams may be required to solve for all of the unknowns in any particular frame or machine.

GENERAL SOLUTION PROCEDURE FOR MACHINE AND FRAME PROBLEMS:

a) For frames (or machines that have supports), construct a free body diagram of the entire frame and then solve for as many support reactions as possible.
b) Develop a list of all of the two-force members.
c) Establish a sign convention (if not already established); the sign convention will be used for the entire problem.
d) Construct an exploded view diagram of the machine or frame's individual members (disconnect members from each other, and from any/all supports).
e) Using the exploded view diagram from item d (above), develop complete free body diagrams of all of the two-force members.
f) Transfer two-force member information to other appropriate members in the exploded view diagram.
g) Complete (except for dimensions) the free body diagrams for all other members shown in the exploded view diagram. Include the magnitude and correct sense for any support reactions found in item a (above).
h) Study and evaluate the free body diagrams of the individual members and then develop a global path to a solution.
i) Following the global path developed above (item h), complete the algebraic and numeric solution using all appropriate protocols and procedures.
j) Completely and correctly report all required answers.

DEVELOPING FREE BODY DIAGRAMS FOR FRAMES AND MACHINES

Consider the frame shown in Figure 11-5; the frame is constructed from three members (AD, DE, and BE) that are connected with pins at B, D, and E. Forces F_1 and F_2 are applied as shown.

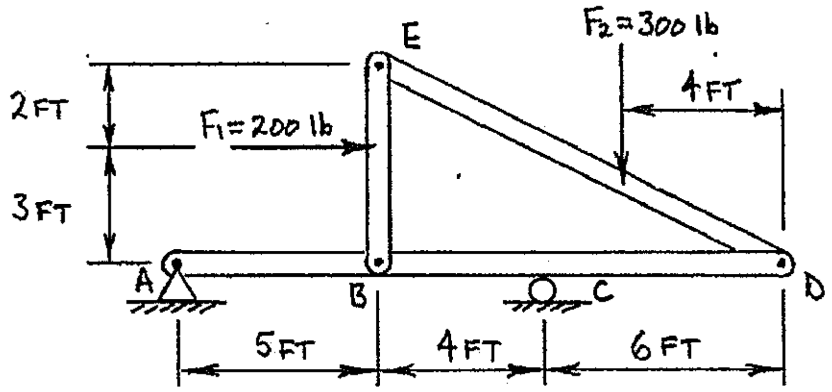

Figure 11-5 Frame with loads applied as shown

Figure 11-6 shows the FBD constructed for the entire frame (from Figure 11-5, previous page), with the support reactions modeled at locations A and C. After a FBD has been constructed it is typically evaluated to determine if the unknowns shown on that FBD can be found using static equilibrium equations. For any two-dimensional free body diagram that represents a non-concurrent coplanar system, there are only three independent equilibrium equations that can be developed from the free body diagram: $\Sigma F_X = 0$, $\Sigma F_Y = 0$, and $\Sigma M_P = 0$. So, the maximum number of unknowns that could be found is three (3 equations, 3 unknowns). Since there are only three unknowns shown on the FBD in Figure 11-6, all three of the support reactions can be calculated using the available equilibrium equations.

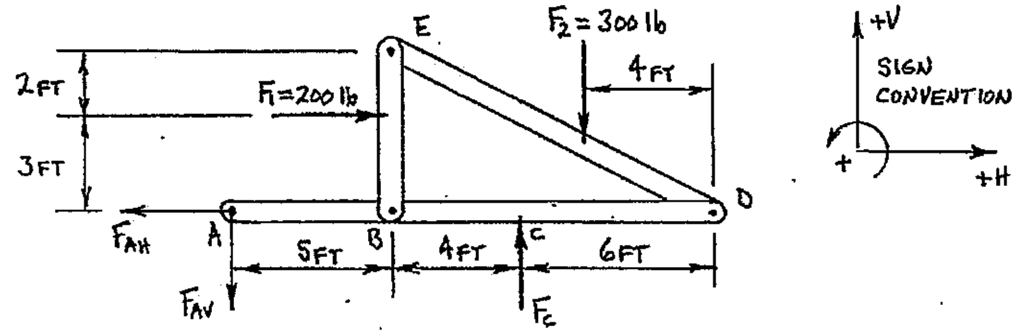

FIGURE 11-6 FBD of frame shown in Figure 11-5

A partial exploded view diagram of all frame members (from Figure 11-5, previous page) is shown in Figure 11-7. It is important to note that there are **NO TWO-FORCE MEMBERS** in this particular frame. Support reactions are shown at A (pin) and C (roller) on member AD. Pin reactions (vertical and horizontal components) are also shown at locations B and D on member AD (the pins where members BE and DE have been disconnected from member AD). These vertical and horizontal components represent a model of the forces acting <u>ON</u> member AD at pins B and D.

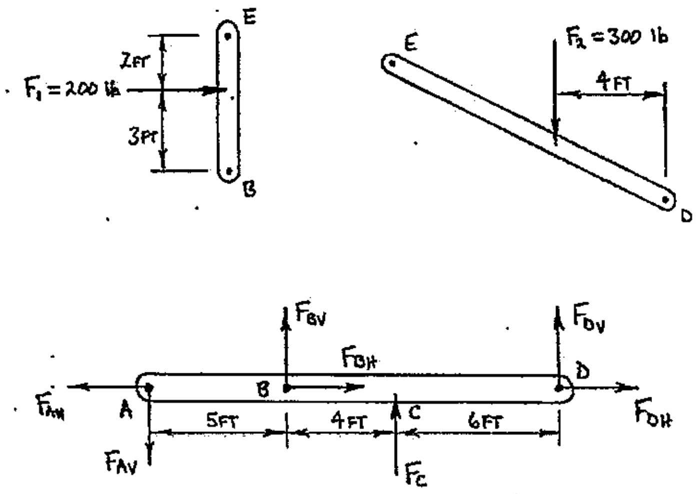

FIGURE 11-7 Partial exploded view diagram of the frame from Figure 11-5

According to Newton's 3rd Law, "to every action there is an equal and opposite reaction". So, where two members were attached at a common pin there must be equal but opposite reactions on the free body diagrams of each individual member. For example, F_{BH} acting on member BE must have equal magnitude but opposite sense to F_{BH} acting on member AD; likewise, F_{BV} acting on member BE must have equal magnitude but opposite sense to F_{BV} on member AD (see Figure 11-8). The pin reactions shown acting on member AD at pin D (Figure 11-7, previous page) would also result in "equal but opposite" reactions at pin D on member DE. Equal but opposite reactions must be shown on the free body diagrams of individual members that share a common pin, so that if the exploded view FBDs were reassembled the pin would be in static equilibrium (the summation of all forces acting at that pin would be zero). This is why no reaction forces are shown on pins if the pins are still connected (see the FBD of the entire frame shown in Figure 11-6). Pins are considered to be "internal" to a frame or machine until individual members that attach to a common pin have been disconnected; the pins then become external on the free body diagrams of the individual members.

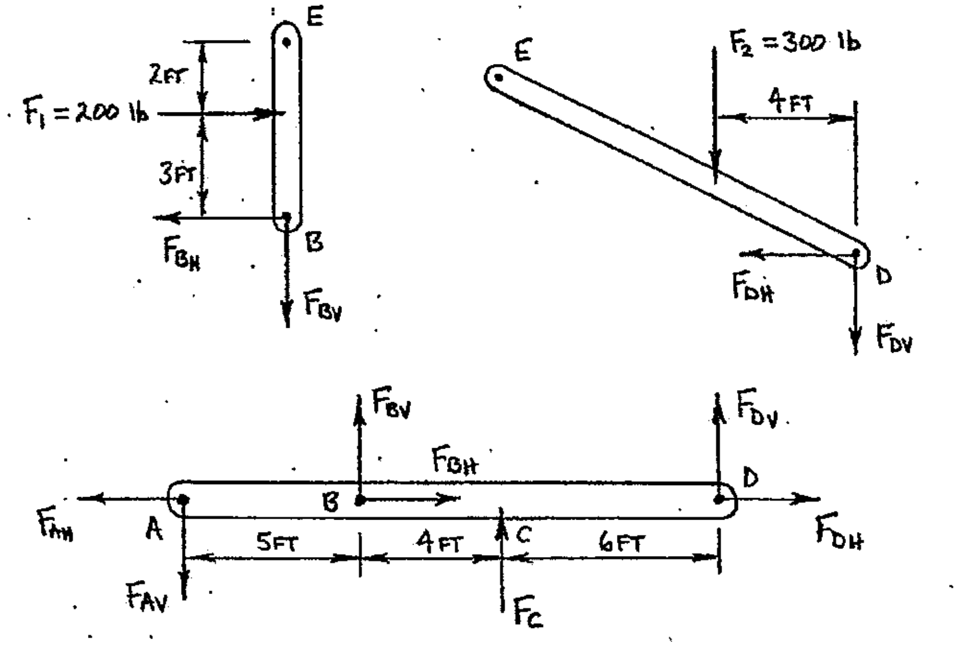

FIGURE 11-8 2nd Partial exploded view diagram of the frame from Figure 11-5

Finally, "equal but opposite" reaction components are shown acting on members BE and DE at pin E. Titles are included for each individual free body diagram, and dimensions can be included as required for the algebraic and numeric solution. The completed exploded view diagram (the set of free body diagrams for each individual member) is shown in Figure 11-9, following page.

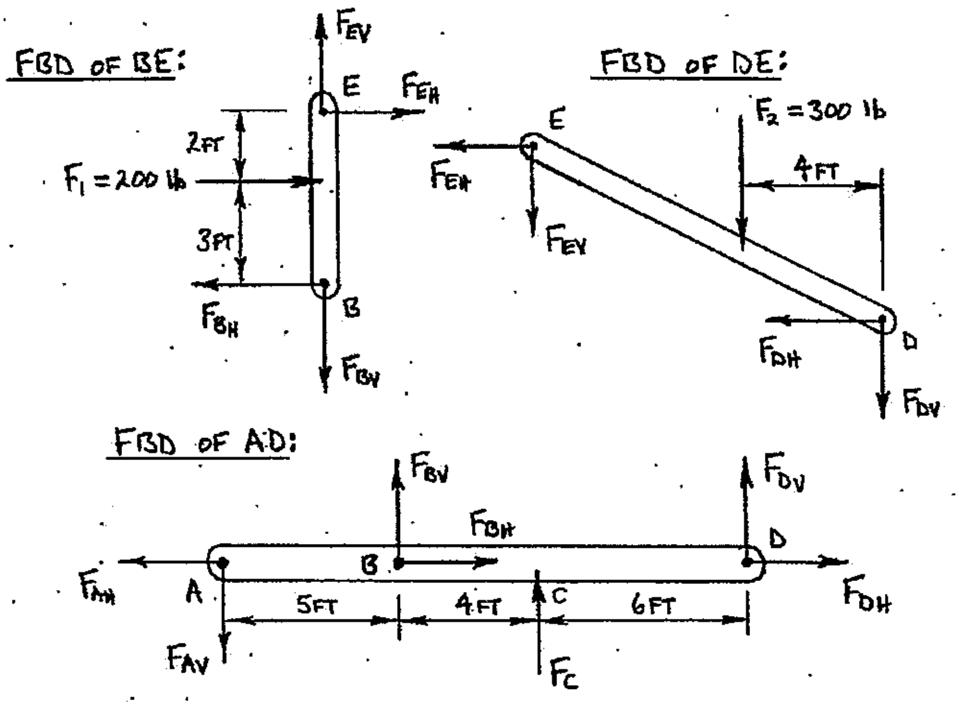

FIGURE 11-9 Complete exploded view diagram of the frame from Figure 11-5

The frame shown in Figure 11-10 (below) is similar to the frame (from Figure11-5, page 11-5) used to develop the exploded view diagram above, but with ***two major differences***; force F_2 has been removed from member DE, and the roller support was moved to the pin at D. This frame now has one **two-force member** (member DE), and the roller support is at a location where multiple frame members are joined at a common pin.

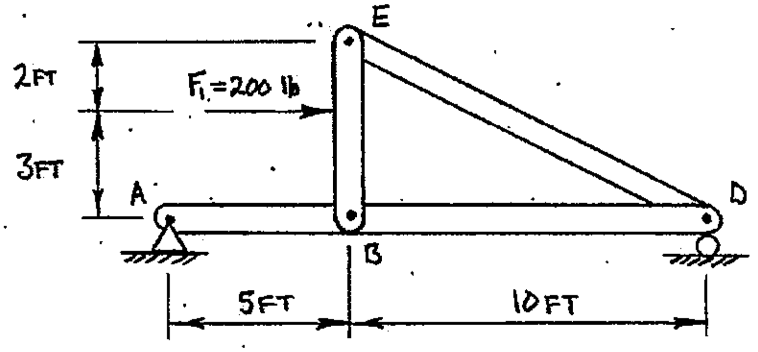

Figure 11-10 Frame supported and loaded as shown.

Always construct the individual free body diagrams of the two force members **FIRST** when developing an exploded view diagram of a frame that contains two-force members. Remember to model each pin reaction on a two-force member as a single force with a known line of action (the line of action of the single force at each pin of a

two-force member must pass through **BOTH** of the member's pins). In Figure 11-11, two-force member DE has been constructed **FIRST** in the partial exploded view diagram of the frame shown in Figure 11-10 (previous page).

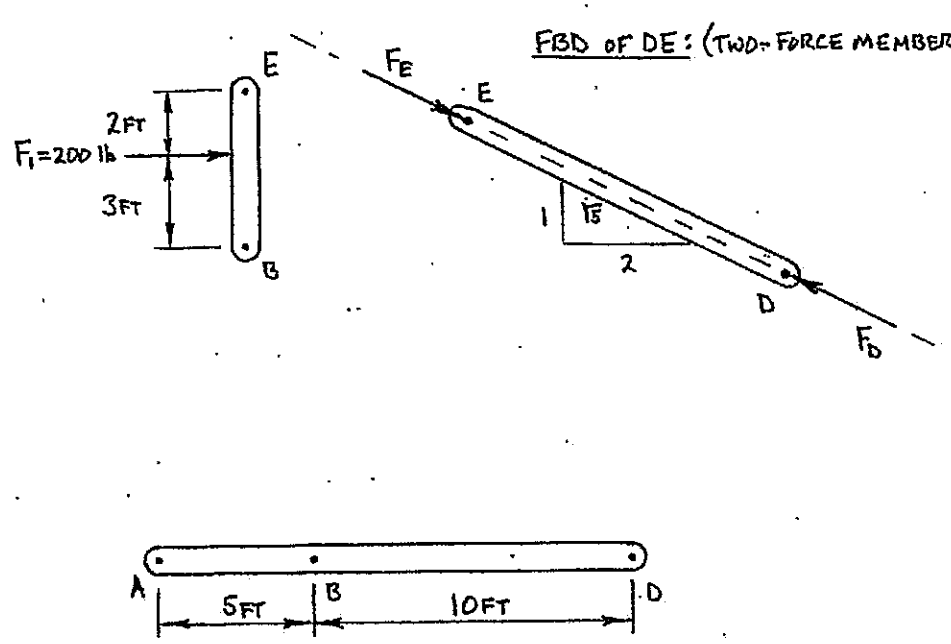

FIGURE 11-11 Partial exploded view diagram of the frame shown in Figure 11-10

Next, the single reaction force at each pin of two-force member DE is transferred "equal but opposite" to the corresponding pins on members BE and AD, as shown in Figure 11-12.

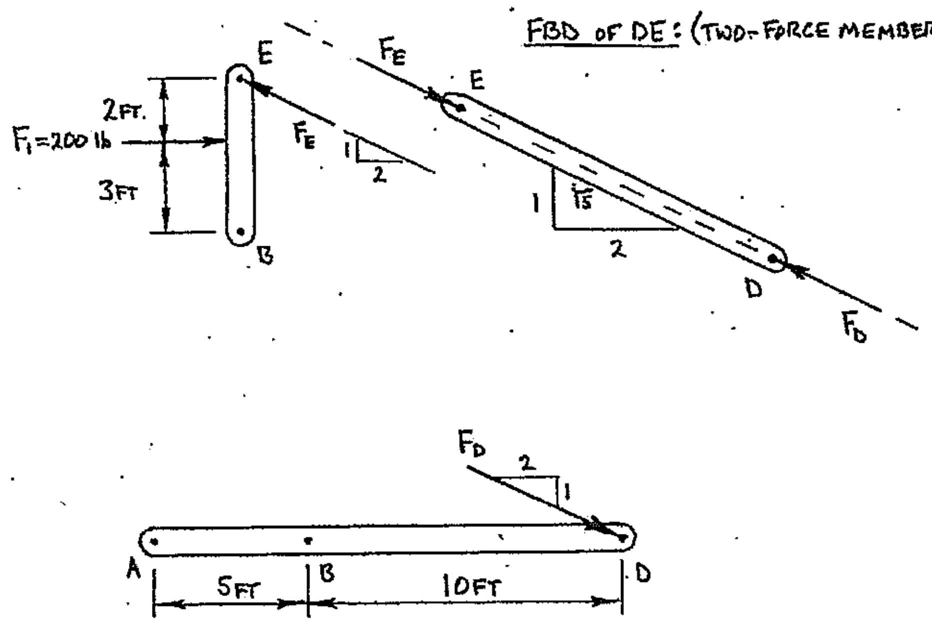

FIGURE 11-12 2nd partial exploded diagram of the frame shown in Figure 11-10

The support reactions for the pin at A and the roller at D can now be added to the exploded view diagram. The roller support at D represents a special case. Whenever a support (or applied force) is acting at a location where multiple members are joined at a common pin, the support reaction (or applied force) should be modeled/applied on only **ONE** of the members, and preferably **NOT** on any two-force members joined at that location. The roller support at location D will be modeled on member AD, and the symbol F_{RD} will be used to differentiate the support reaction from other pin reactions at location D (see Figure 11-13). The support reaction at pin A will be modeled as vertical and horizontal components. Finally, vertical and horizontal components (equal but opposite) are shown at pin B on members AD and BE.

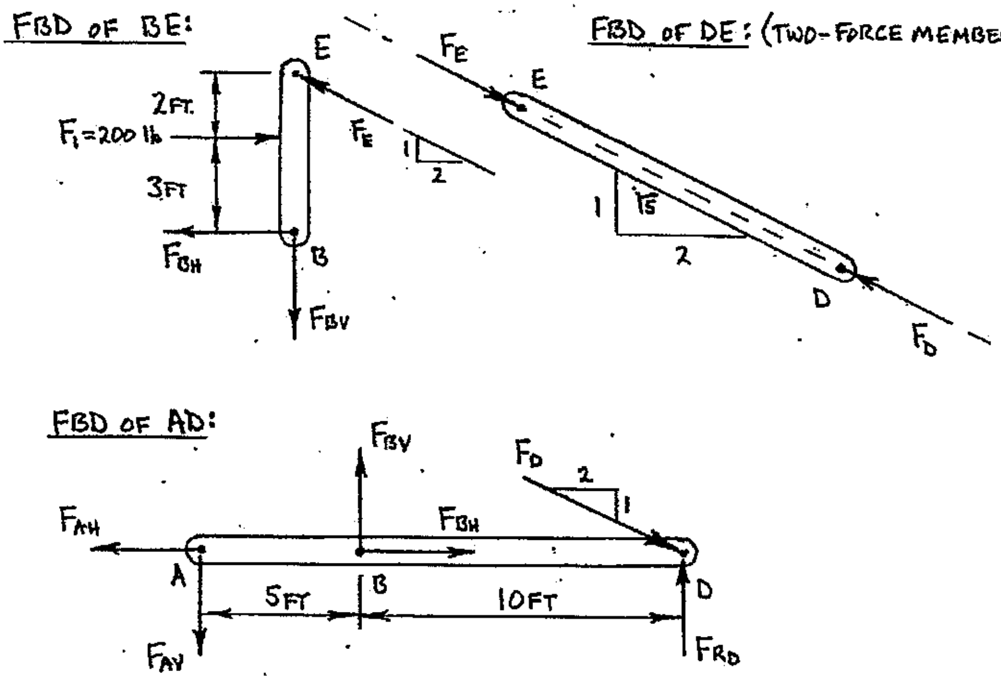

Figure 11-13 Completed exploded view diagram of the frame from Figure 11-10

A typical frame problem is shown in Example 11-1 (following page). The solution for Example 11-1 follows the "normal" pattern for frame and machine problems, but keep in mind that solutions will vary depending on the structure, the loading condition, and the requirements of the solution.

Example 11-1 The frame shown below is constructed of four members; AC, AD, BE, and DF. There are pin connections at points A, B, C, D, E, and F. The frame supports two applied distributed loads. Calculate the support reactions acting on the frame at pins C and F.

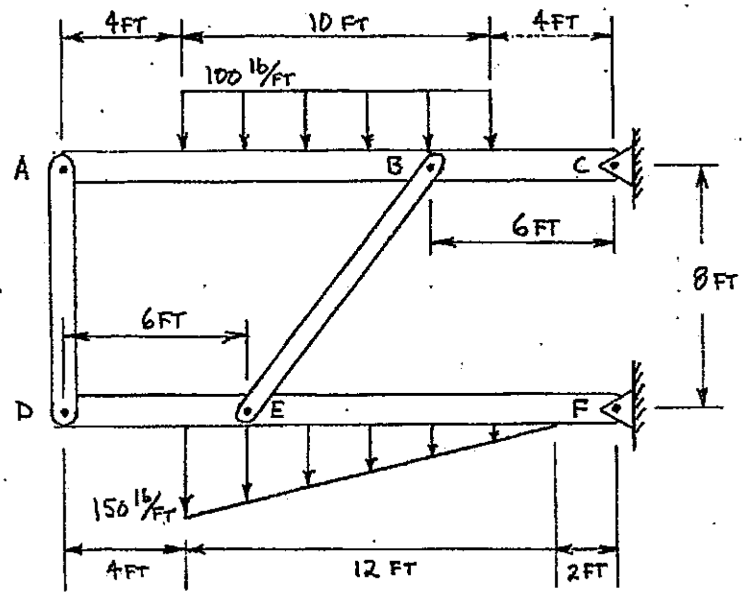

A free body diagram of the entire frame is shown below. Normally, for a frame problem, it is a good idea to begin with a FBD of the entire frame since the support reactions will probably be needed at some point in the solution. Also, remember that you may not be able to find all unknown reactions from any given FBD since there are only three independent equilibrium equations available.

<u>FBD of entire frame:</u>

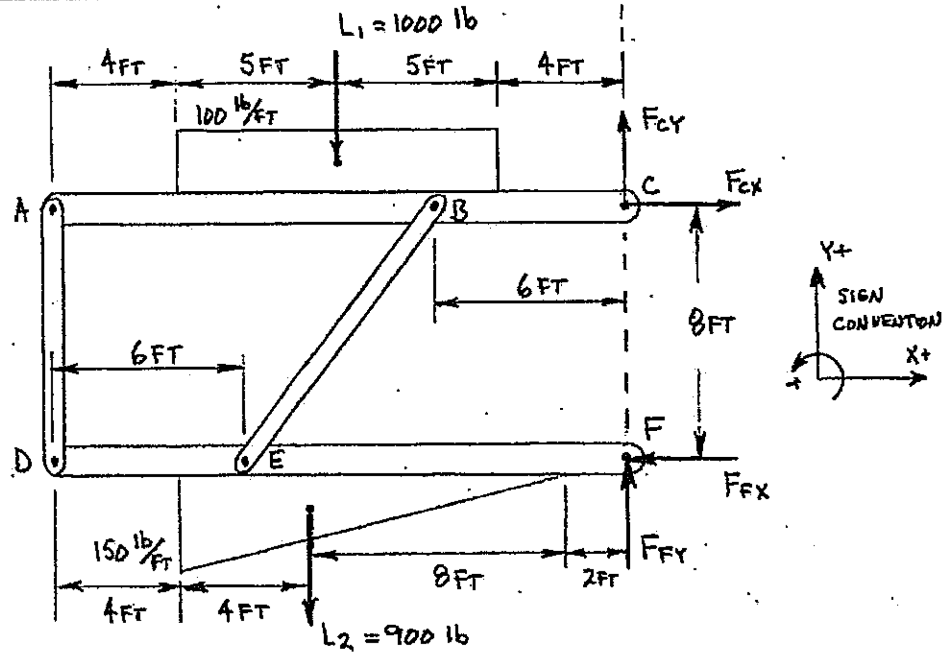

cont'd

Example 11-1: (cont'd.)

The concentrated effect of each distributed load was found as follows:

$$L_1 = (10\,\text{ft})\left(100\frac{\text{lb}}{\text{ft}}\right) = \underline{\underline{1000\,\text{lb}\downarrow}}$$

$$L_2 = \frac{1}{2}(12\,\text{ft})\left(150\frac{\text{lb}}{\text{ft}}\right) = \underline{\underline{900\,\text{lb}\downarrow}}$$

There are four unknowns shown on the FBD, so all of the unknowns cannot be found from the free body diagram of the entire frame. However, the lines of action of three unknown forces intersect at two locations (C and F), so moment equilibrium equations can be developed for those locations and two of the reactions can be calculated. Summing moments equal to zero at point C will allow F_{FX} to be found, and then F_{CX} can be calculated by summing moments equal to zero about point F.

<u>SOLVING FOR F_{FX}</u>: (using FBD of entire frame)

$$\Sigma M_C = 0$$

$$0 = \pm[L_1(d_\perp)] \pm [L_2(d_\perp)] \pm [F_{FX}(d_\perp)]$$

$$0 = +[L_1(9\text{ft})] + [L_2(10\text{ft})] - [F_{FX}(8\text{ft})]$$

$$F_{FX} = \frac{+[L_1(9\,\text{ft})] + [L_2(10\,\text{ft})]}{8\,\text{ft}}$$

$$F_{FX} = \frac{+[(1000\,\text{lb})(9\,\text{ft})] + [(900\,\text{lb})(10\,\text{ft})]}{8\,\text{ft}}$$

$$F_{FX} = +2250\,\text{lb}$$

$$F_{FX} = \underline{\underline{2250\,\text{lb}\leftarrow}} \qquad \text{(acting on member DF)}$$

<u>SOLVING FOR F_{CX}</u>: (using FBD of entire frame)

$$\Sigma M_F = 0$$

$$0 = \pm[L_1(d_\perp)] \pm [L_2(d_\perp)] \pm [F_{CX}(d_\perp)]$$

$$0 = +[L_1(9\text{ft})] + [L_2(10\text{ft})] - [F_{CX}(8\text{ft})]$$

$$F_{CX} = \frac{+[L_1(9\,\text{ft})] + [L_2(10\,\text{ft})]}{8\,\text{ft}}$$

$$F_{CX} = \frac{+[(1000\,\text{lb})(9\,\text{ft})] + [(900\,\text{lb})(10\,\text{ft})]}{8\,\text{ft}}$$

$$F_{CX} = +2250\,\text{lb}$$

$$F_{CX} = \underline{\underline{2250\,\text{lb}\rightarrow}} \qquad \text{(acting on member AC)}$$

cont'd.

Example 11-1: (cont'd.)

LIST OF TWO-FORCE MEMBERS IN FRAME SHOWN ON PAGE 11-11:

member AD
member BE

An exploded view diagram of the frame can now be constructed, with members AD and BE correctly modeled and labeled as two-force members. The support reactions F_{FX} and F_{CX} are shown with correct magnitude, direction and sense on the individual FBDs of frame members AC and DF.

EXPLODED VIEW DIAGRAM OF FRAME MEMBERS:

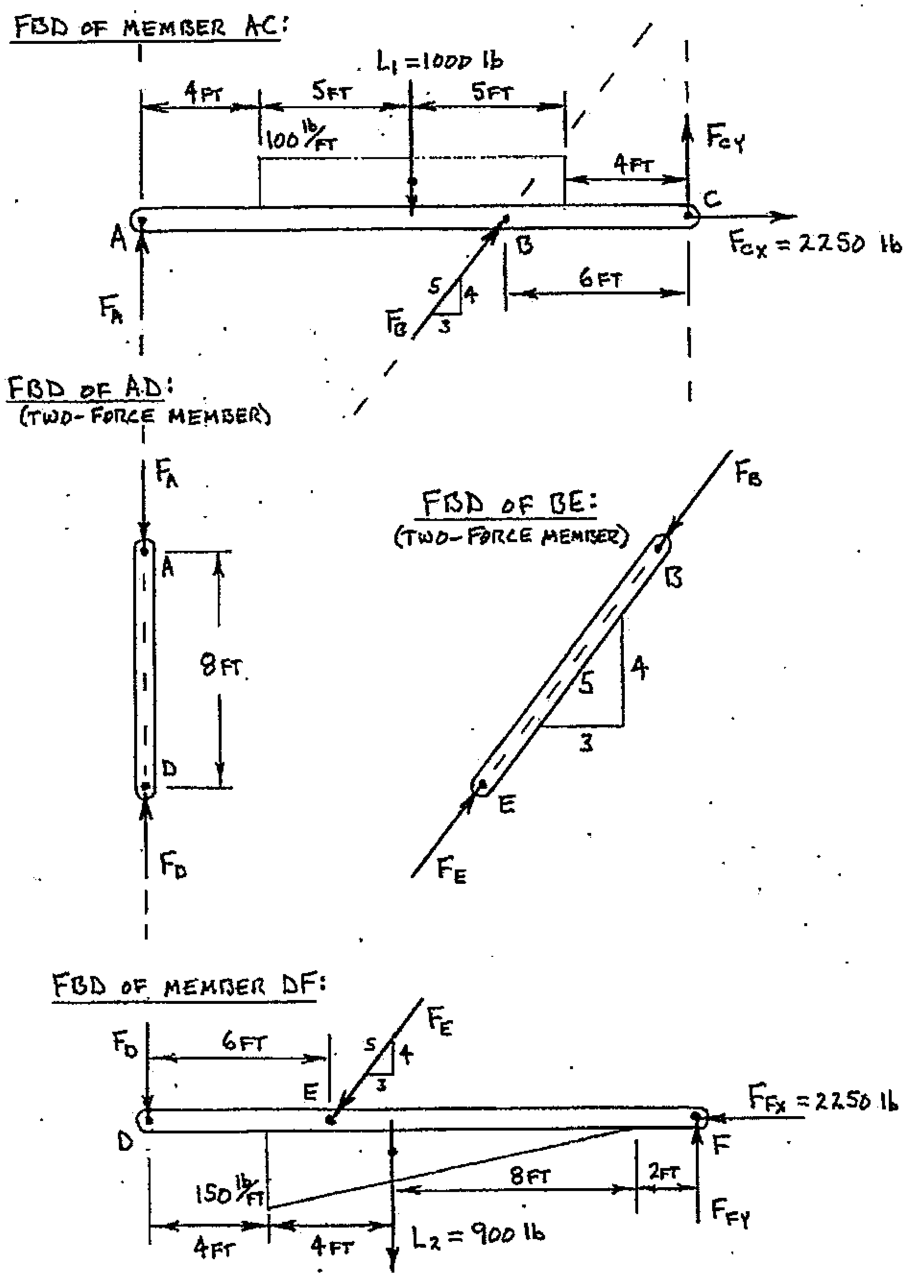

Example 11-1: (cont'd.)

Two of the four components of the support reactions have already been determined (F_{CX} and F_{FX}) using the FBD of the entire frame. A reasonable path to determine F_{CY} and F_{FY} would be to use the free body diagram of member AC to solve for F_{CY}, since there are only three unknowns on that FBD. The next (last) step would be to return to the FBD of the entire frame and solve for F_{FY}.

An additional free body diagram of member AC is shown below, so that the intersection points of the unknown force's lines of action can be clearly shown. This free body diagram will be used to find F_{CY}.

FBD OF MEMBER AC:

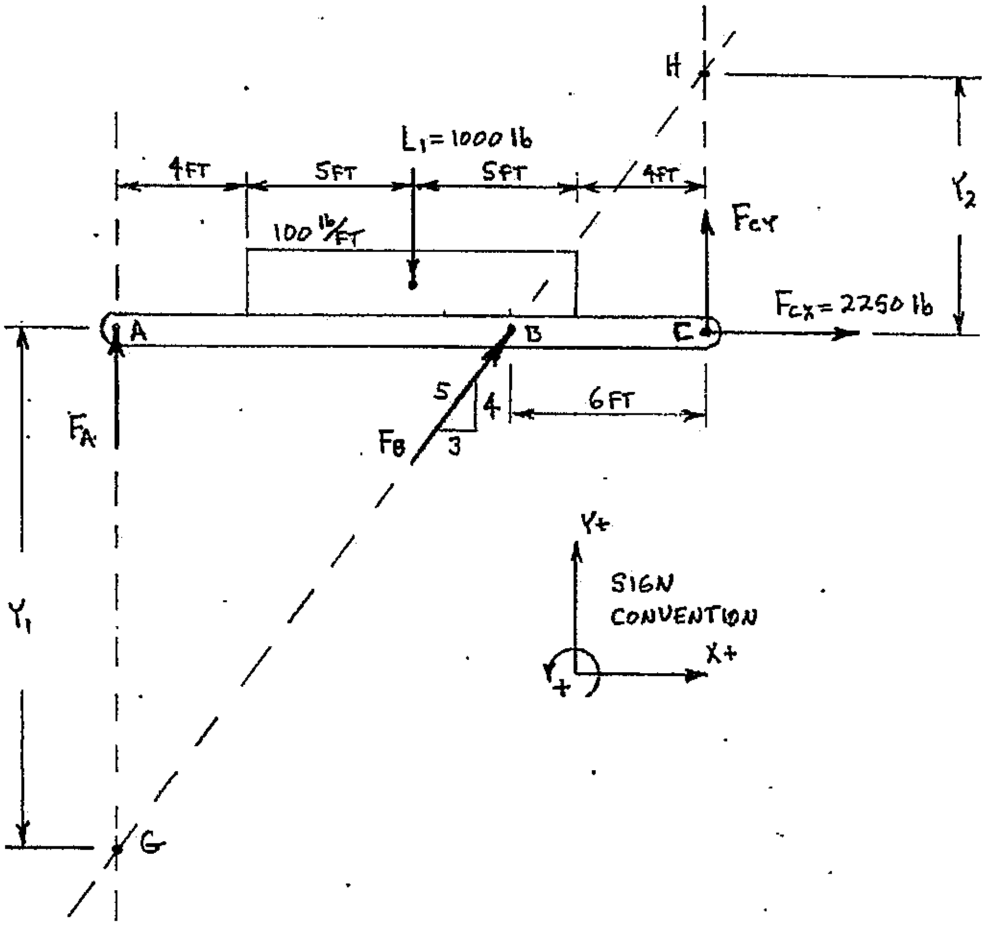

The distance Y_1 will be required to find F_{CY}:

$$\frac{Y_1}{12\text{ft}} = \frac{4}{3}$$

$$Y_1 = \left(\frac{4}{3}\right)(12\text{ft})$$

$$Y_1 = \underline{\underline{16\text{ ft}}}$$

cont'd.

Example 11-1: (cont'd.)

Solving for F_{CY}: (using the FBD of member AC shown on previous page)

$$\Sigma M_G = 0$$
$$0 = \pm[L_1(d_\perp)] \pm [F_{CX}(d_\perp)] \pm [F_{CY}(d_\perp)]$$
$$0 = -[L_1(9\text{ ft})] - [F_{CX}(Y_1)] + [F_{CY}(18\text{ ft})]$$
$$F_{CY} = \frac{+[L_1(9\text{ ft})] + [F_{CX}(Y_1)]}{18\text{ ft}}$$
$$F_{CY} = \frac{+[(1000\text{ lb})(9\text{ ft})] + [(2250\text{ lb})(16\text{ ft})]}{18\text{ ft}}$$
$$F_{CY} = +2500.00\text{ lb}$$
$$F_{CY} = \underline{\underline{2500\text{ lb} \uparrow}} \quad \text{(acting on member AC)}$$

A solution for F_{FY} can now be found by returning to the free body diagram of the entire frame and using the value for F_{CY} found above.

SOLVING FOR F_{CY}: (using the FBD of the entire frame, shown on page 11-11)

$$\Sigma F_Y = 0$$
$$0 = \pm L_1 \pm L_2 \pm F_{CY} \pm F_{FY}$$
$$0 = -L_1 - L_2 + F_{CY} + F_{FY}$$
$$F_{FY} = +L_1 + L_2 - F_{CY} \qquad \underline{\text{and}} \quad F_{CY} = +2500\text{ lb}$$
$$F_{FY} = +1000\text{ lb} + 900\text{ lb} - (+2500\text{ lb})$$
$$F_{FY} = -600.00\text{ lb}$$
$$F_{FY} = \underline{\underline{600\text{ lb} \downarrow}} \quad \text{(acting on member DF)}$$

Answers for the support reactions acting on the frame at pins C and F are shown below. For frame and machine problems, it is important to state on which member the force is acting.

Answers:		
$F_{CX} = 2250\text{ lb}$	$\rightarrow$	(acting on member AC)
$F_{CY} = 2500\text{ lb}$	$\uparrow$	(acting on member AC)
$F_{FX} = 2250\text{ lb}$	$\leftarrow$	(acting on member DF)
$F_{FY} = 600\text{ lb}$	$\downarrow$	(acting on member DF)

Example 11-2 A mechanism used for swaging wire is shown below. Assume that that pins A, G and the contact point of the wire on member BG all line on a common vertical line. Determine the forces (lb) acting on member ABCD at pin B.

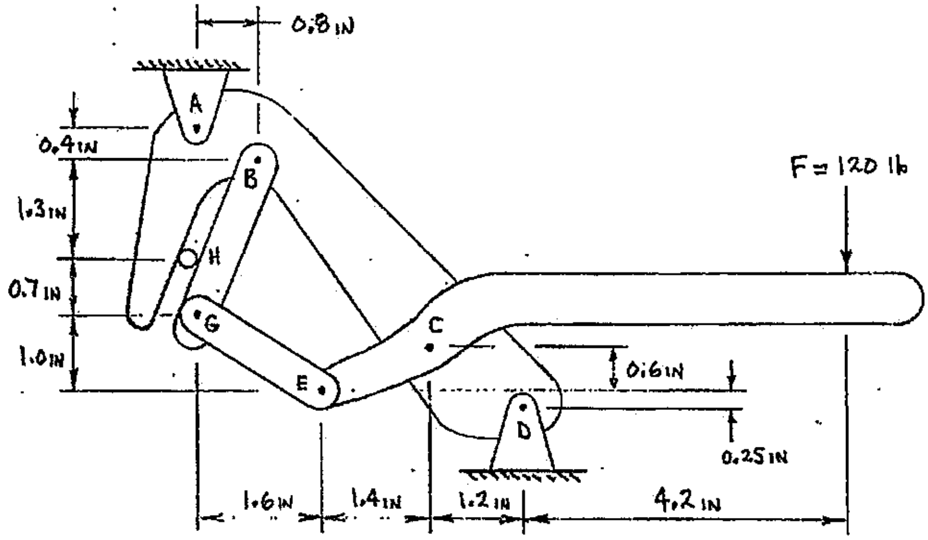

EXPLODED VIEW DIAGRAM OF SWAGING MECHANISM: (EG is a two-force member)

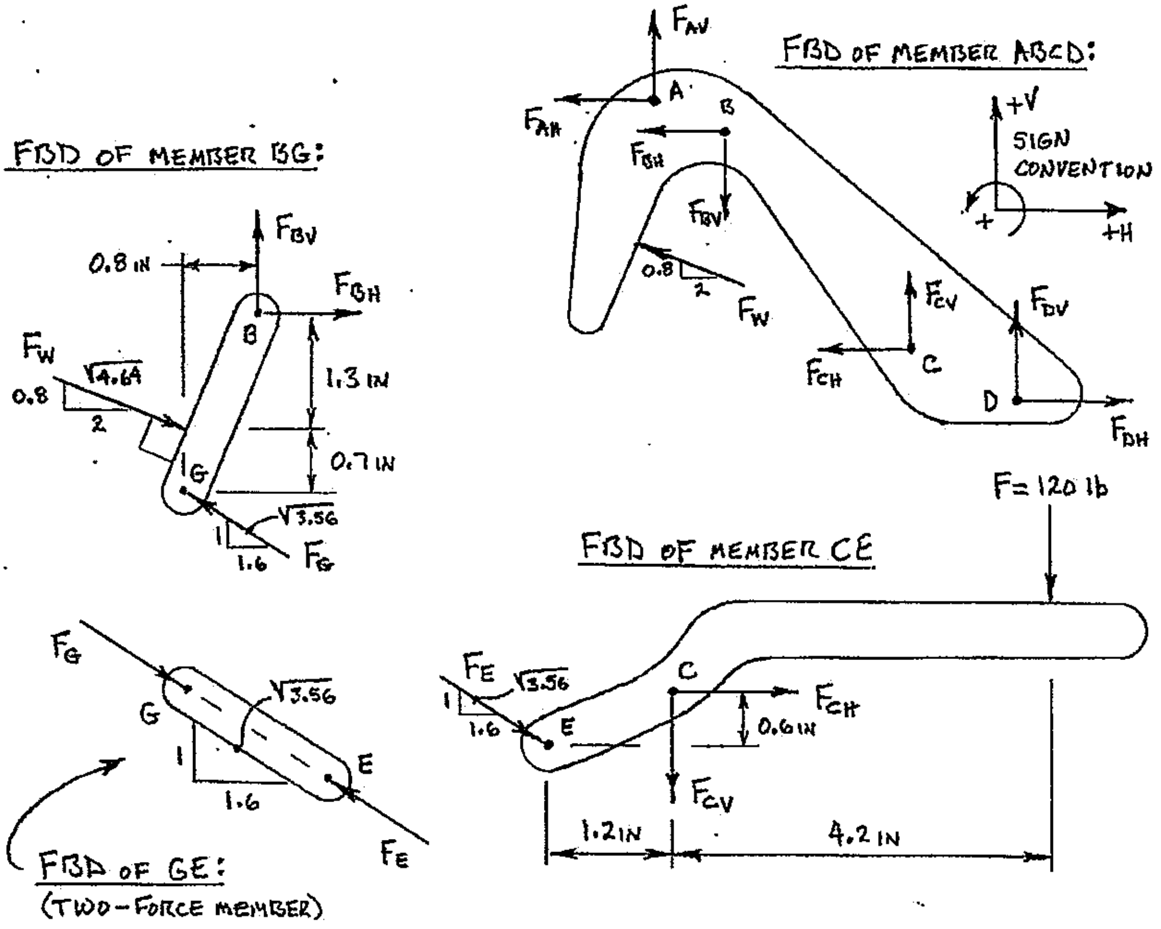

Example 11-2: (cont'd.)

One path for a solution for this problem could be as follows. Determine force F_E using the FBD of member CE. Then transfer force F_E through two-force member GE to determine the force F_G acting on member BG at pin G. Next, determine forces F_W, F_{BH} and F_{BV} (acting on member BG) using the free body diagram of member BG. Finally, transfer forces F_{BH} and F_{BV} (equal but opposite) from member BG to member ABCD.

<u>SOLVING FOR F_E</u>: (using FBD of member CE)

$$\Sigma M_C = 0$$

$$0 = \pm\left[F_{EH}(d_\perp)\right] \pm \left[F_{EV}(d_\perp)\right] \pm \left[F(d_\perp)\right]$$

$$0 = +\left[\left(\frac{1.6}{\sqrt{3.56}}\right)(F_E)(0.6\text{ in})\right] + \left[\left(\frac{1}{\sqrt{3.56}}\right)(F_E)(1.2\text{ in})\right] - \left[F(4.2\text{ in})\right]$$

$$F_E = \frac{+\left[F(4.2\text{ in})\right]}{\left[\left(\frac{1.6}{\sqrt{3.56}}\right)(0.6\text{ in})\right] + \left[\left(\frac{1}{\sqrt{3.56}}\right)(1.2\text{ in})\right]}$$

$$F_E = \frac{+\left[(120\text{ lb})(4.2\text{ in})\right]}{\left[\left(\frac{1.6}{\sqrt{3.56}}\right)(0.6\text{ in})\right] + \left[\left(\frac{1}{\sqrt{3.56}}\right)(1.2\text{ in})\right]}$$

$$F_E = +\,440.252\text{ lb}$$

$F_E = 440.252$ lb (direction sketch: slope 1.6 : 1) (acting on member CE)

Transferring force F_E through two-force member GE to pin G on member BG:

$F_E = +\ 440.252$ lb (acting on member GE)

$F_G = +\ 440.252$ lb (acting on member GE)

$F_G = +\ 440.252$ lb (acting on member BG)

<u>cont'd.</u>

Example 11-2: (cont'd.)

<u>SOLVING FOR FORCE F_W</u>: (using FBD of member BG)

$$\Sigma M_B = 0$$

$$0 = \pm\left[F_{GH}(d_\perp)\right] \pm \left[F_{GV}(d_\perp)\right] \pm \left[F_{WH}(d_\perp)\right] \pm \left[F_{WV}(d_\perp)\right]$$

$$0 = -\left[\left(\frac{1.6}{\sqrt{3.56}}\right)(F_G)(2\text{ in})\right] - \left[\left(\frac{1}{\sqrt{3.56}}\right)(F_G)(0.8\text{ in})\right] + \left[\left(\frac{2}{\sqrt{4.64}}\right)(F_W)(1.3\text{ in})\right] + \left[\left(\frac{0.8}{\sqrt{4.64}}\right)(F_W)(0.8\text{ in})\right]$$

$$F_W = \frac{+\left[\left(\frac{1.6}{\sqrt{3.56}}\right)(F_G)(2\text{ in})\right] + \left[\left(\frac{1}{\sqrt{3.56}}\right)(F_G)(0.8\text{ in})\right]}{\left[\left(\frac{2}{\sqrt{4.64}}\right)(1.3\text{ in})\right] + \left[\left(\frac{0.8}{\sqrt{4.64}}\right)(0.8\text{ in})\right]}$$

$$F_W = \frac{+\left[\left(\frac{1.6}{\sqrt{3.56}}\right)(+440.252\text{ lb})(2\text{ in})\right] + \left[\left(\frac{1}{\sqrt{3.56}}\right)(+440.252\text{ lb})(0.8\text{ in})\right]}{\left[\left(\frac{2}{\sqrt{4.64}}\right)(1.3\text{ in})\right] + \left[\left(\frac{0.8}{\sqrt{4.64}}\right)(0.8\text{ in})\right]}$$

$$F_W = +620.512\text{ lb}$$

$F_W = \underline{\underline{620.512\text{ lb}}}$ 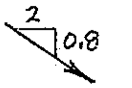 (acting on member BG)

<u>SOLVING FOR F_{BH}</u>: (using FBD of member BG)

$$\Sigma F_H = 0$$

$$0 = \pm F_{GH} \pm F_{WH} \pm F_{BH}$$

$$0 = -\left(\frac{1.6}{\sqrt{3.56}}\right)(F_G) + \left(\frac{2}{\sqrt{4.64}}\right)(F_W) + F_{BH}$$

$$F_{BH} = +\left(\frac{1.6}{\sqrt{3.56}}\right)(F_G) - \left(\frac{2}{\sqrt{4.64}}\right)(F_W)$$

$$F_{BH} = +\left(\frac{1.6}{\sqrt{3.56}}\right)(+440.252\text{ lb}) - \left(\frac{2}{\sqrt{4.64}}\right)(+620.512\text{ lb})$$

$$F_{BH} = -202.798\text{ lb}$$

$F_{BH} = \underline{\underline{202.798\text{ lb}\ \leftarrow}}$ (acting on member BG)

<u>cont'd.</u>

Example 11-2: (cont'd.)

Solving for F_{BV}: (using FBD of member BG)

$$\Sigma F_V = 0$$

$$0 = \pm F_{GV} \pm F_{WV} \pm F_{BV}$$

$$0 = +\left(\frac{1}{\sqrt{3.56}}\right)(F_G) - \left(\frac{0.8}{\sqrt{4.64}}\right)(F_W) + F_{BV}$$

$$F_{BV} = -\left(\frac{1}{\sqrt{3.56}}\right)(F_G) + \left(\frac{0.8}{\sqrt{4.64}}\right)(F_W)$$

$$F_{BV} = -\left(\frac{1}{\sqrt{3.56}}\right)(+440.252\text{ lb}) + \left(\frac{0.8}{\sqrt{4.64}}\right)(+620.512\text{ lb})$$

$$F_{BV} = -2.88072\text{ lb}$$

$$F_{BV} = \underline{\underline{2.88072\text{ lb} \downarrow}}$$ (acting on member BG)

Transferring F_{BH} and F_{BV} to member ABCD:

F_{BH} = - 202.798 lb (acting on member BG)

F_{BH} = - 202.798 lb (acting on member ABCD)

F_{BH} = 202.798 lb → (acting on member ABCD)

F_{BV} = -2.88072 lb (acting on member BG)

F_{BV} = -2.88072 lb (acting on member ABCD)

F_{BV} = 2.88072 lb ↑ (acting on member ABCD)

<u>ANSWER</u>:

F_{BH} = 202.8 lb → (acting on member ABCD)

F_{BV} = 2.881 lb ↑ (acting on member ABCD)

SUMMARY

Frames and machines are structures that have at least one multi-force member. Frames typically allow no movement between members, and are used to transfer applied loads to points of support. Machines are structures that will allow relative motion between members and are used to amplify and modify forces. However, machines are typically analyzed in a fixed (static) position.

A multi-force member is any member that has loads applied at three or more different locations on the member. A two-force member must have two (and only two) pins, all forces must be applied at the pins, and no couples can be applied to the member.

The solution method for frames and machines is similar to any static equilibrium problem; free body diagrams are constructed and then evaluated using relevant static equilibrium equations. Since any one free body diagram for many frame and machine problems may have too many unknowns to allow all unknown reactions to be solved using just that FBD, solutions that require multiple free body diagrams are very common. Calculated information (reactions) is transferred from one FBD to the corresponding location on another FBD, equal but opposite.

PRACTICE PROBLEMS

11.1 A solid rectangular stone block and lever are shown below. Assume that there is a smooth surface where the lever contacts the block, and due to friction the lever will have both vertical and horizontal reactions where it contacts the floor. Calculate the vertical force P required to barely lift the right end of the 1200-lb block off of the horizontal support surface.

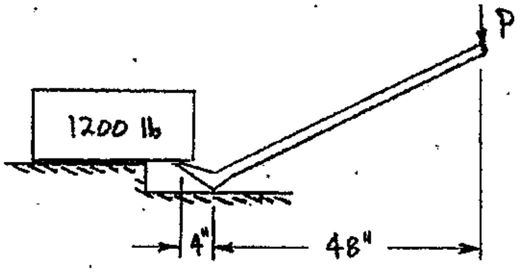

11.2 A frame is constructed from two members, AC and BD, which are connected by a pin at point C. Two concentrated forces are applied to the frame. Calculate all support reactions at pins A and B.

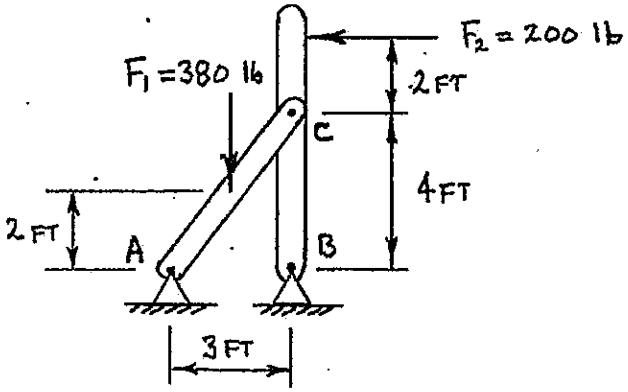

11.3 A cantilever frame is loaded as shown below. Calculate all reactions acting on member AC at locations A, B, and C.

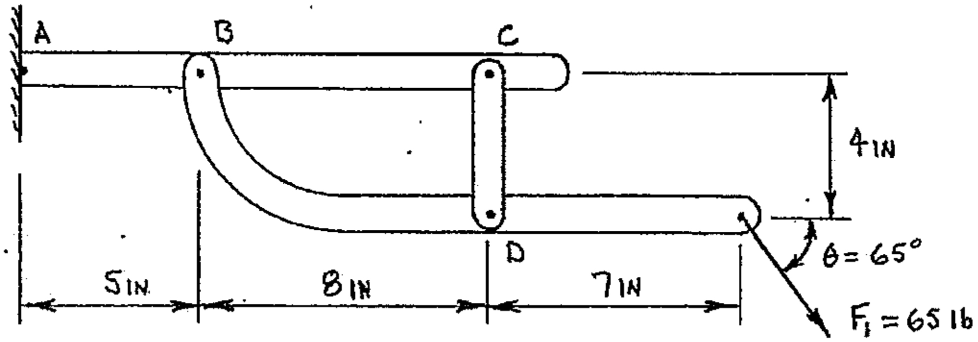

PRACTICE PROBLEMS

11.4 The engine hoist shown below is welded to a steel base at point A. Calculate the hydraulic pressure required to maintain static equilibrium given the 600-lb load shown. Also calculate all support reactions at point A.

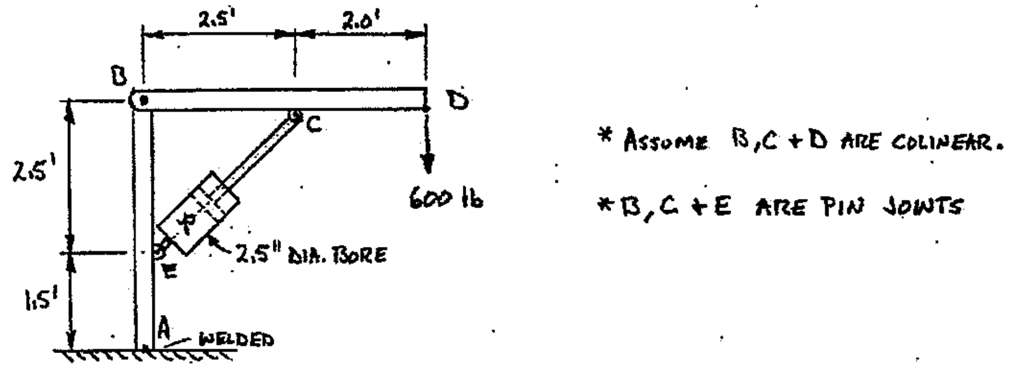

11.5 A frame is loaded as shown below. Calculate all support reactions at pins A, E, and F.

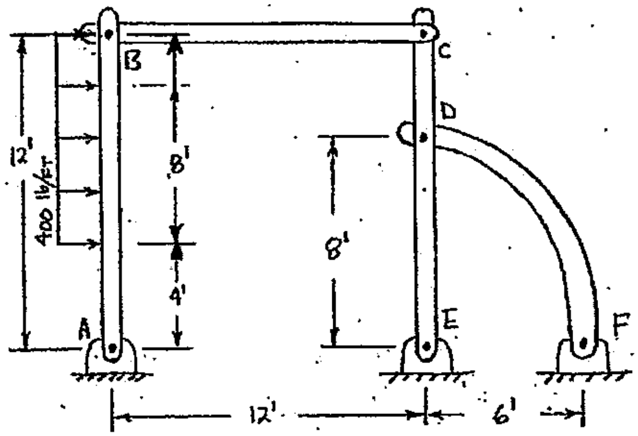

11.6 Calculate the force F_2 required to maintain static equilibrium of the system shown below. Also calculate the support reactions at pin C on member BC.

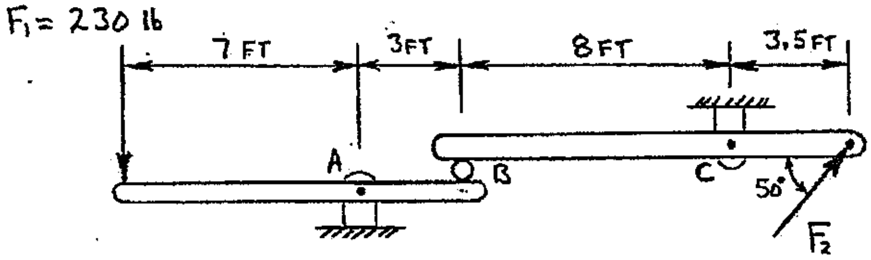

Practice Problems

11.7 A frame is loaded as shown below. Calculate all forces acting on member BC at pins B and C.

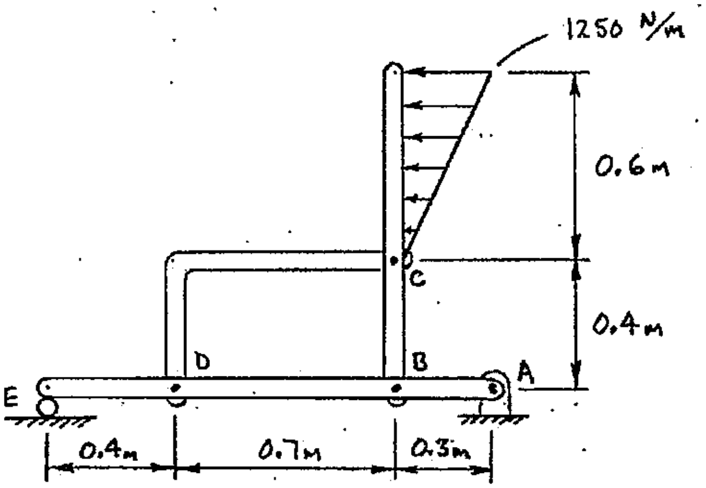

11.8 A frame is loaded as shown below. Calculate all forces acting on member BDE at locations B, D and E.

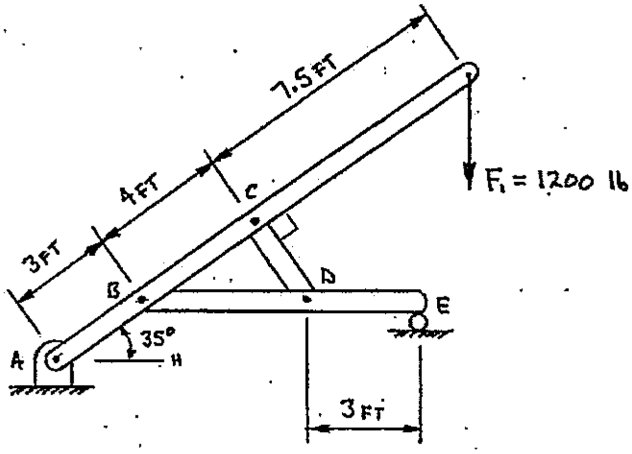

This page intentionally left blank.

CHAPTER 12: TRUSS ANALYSIS – METHOD OF SECTIONS

The primary function of a structure is to support loads by transferring any applied loads from their points of application through the various members of the structure to its supports. Two common types of structures are frames and trusses. A structure is considered to be a frame if at least one member of the structure is a multi-force member (multi-force members have loads applied at three or more locations and can also support applied couples). The loading on multi-force members of a frame causes bending of the members.

TRUSSES

A ***truss*** (Figure 12-1) is a structure composed of straight, slender members that are assumed to be pinned together at their ends. Each location where multiple truss members are fastened (pinned) together is called a ***joint***, and joints are typically labeled with letters. Individual truss members are pinned together to create a structure that consists of any number of interconnected triangular elements (the structural efficiency of a truss is based on the geometric rigidity of triangles).

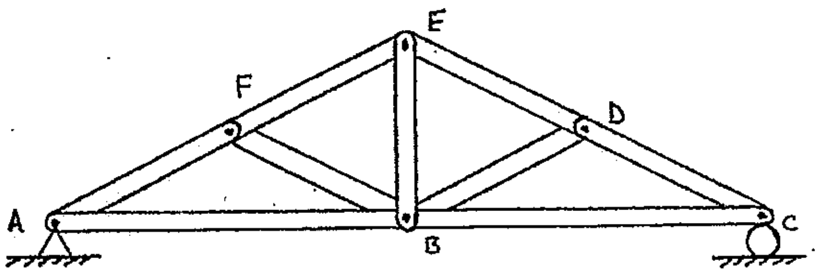

FIGURE 12-1 A typical roof truss

Trusses are normally supported at two locations, typically with a pin at one location and a roller at another location. Supports must always be located at (attached to) truss joints, and are often at the end joints of a truss. However, supports could also be located at any two joints that would allow proper support of the truss. A pin support at one joint could also be used in combination with a cable or rigid link that connects to a second joint.

Trusses are sometimes described using various common names (roof truss, bridge truss, scissor truss, etc.). If the layout and orientation of truss members follows a specific established pattern, then the truss is typically described by the name of the person who originally designed the truss (Pratt truss, Howe truss, Warren truss, etc.). Truss analysis is independent of the type of truss being evaluated; the same analysis techniques will be used for any planar truss, regardless of type or name.

Trusses can be used in groups (roof trusses), pairs (bridge trusses) or individually. Since the loads on an individual truss (within a group, or pair) can normally be established, only the analysis of individual trusses will be considered in this chapter.

Assumptions Used for Evaluating Trusses (Statics)

Several assumptions will be used when evaluating trusses:

1. All members of a truss are straight.
2. Truss members are fastened together with smooth pins at the ends of the members (the pinned connections are often called the "joints" of the truss).
3. All loads and reactions are applied at the pins (joints) of the truss members (and ONLY at the pins).
4. The weight of truss members will be neglected (member weight is normally very small when compared to the loads that can be supported by a typical truss).

Assumptions 2 and 3 define truss members as 2-force members (members with two, and only two, pins where all forces are applied at the pins). Straight 2-force members will only carry axial loads. So, individual truss members are subjected to ONLY longitudinal (axial) tensile and compressive forces.

The joints of a truss will always be modeled as pins (Assumption 2 above), regardless of what is used for the actual connection of truss members at a joint. The members of most wood trusses are connected with stamped steel connection plates. Individual members of metal trusses (and heavy timber trusses) are often connected with gusset plates that are attached to the members with groups of bolts and/or rivets. Even though plate connections will cause a moment at/on the connection, it has been found that the bending effect of the moment does not extend very far from the connection. Since truss members are typically very long, the moments cause by plate connections can be neglected, and the assumption that truss members are subjected to only axial tensile and compressive forces has been found to be reasonable.

In Figure 12-2, loads on the roof decking (snow loads, wind loads, etc.) are transferred to the purlins (purlins run perpendicular to the trusses, and connect groups of trusses). The purlins then transfer the load to the joints of the truss. Loads are then transmitted through the various truss members to the supports.

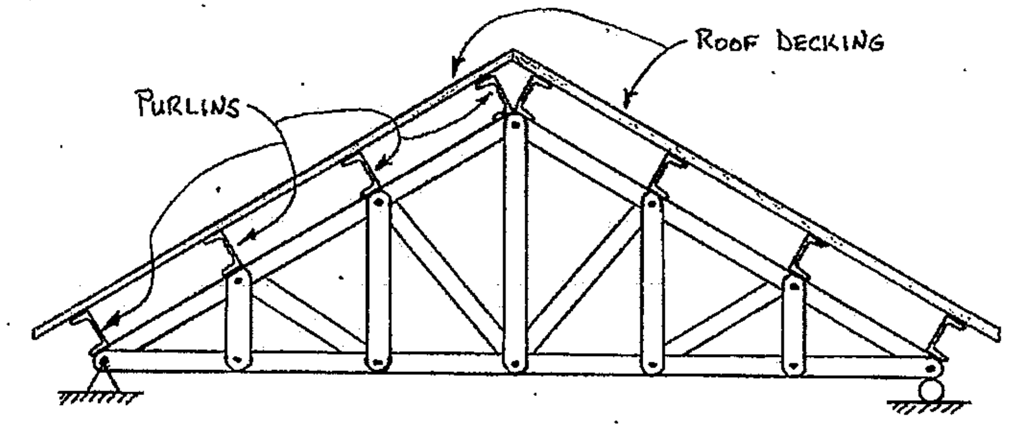

FIGURE 12-2 A Pratt roof truss, purlins and roof decking

The side view of a bridge constructed using two Howe bridge trusses (one on each side) is shown in Figure 12-3. Loads on the bridge deck are transferred to stringers (long beams that run parallel to the trusses). The stringers then transfer the load to floor beams that run perpendicular to the trusses, and the floor beams transfer the load to the truss joints. Loads are then transmitted through various truss members to the supports. Regardless of the type or orientation of a truss, the assumption is that all loads and reactions are applied at the pins (joints).

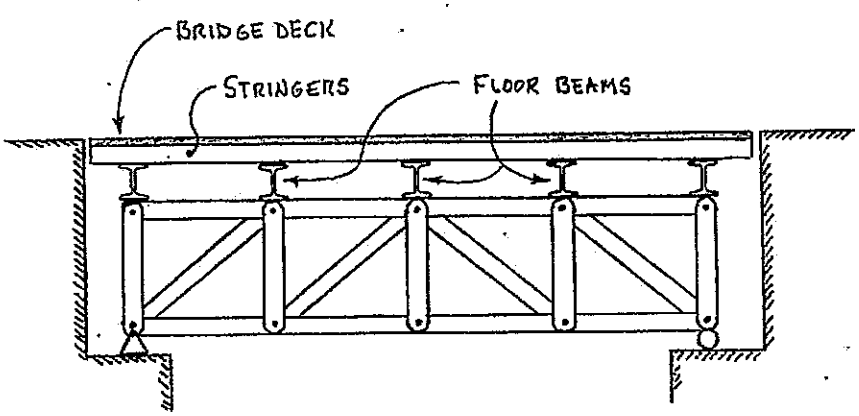

FIGURE 12-3 A Howe bridge truss, floor beams, stringers and bridge deck

ASYMMETRIC TRUSSES

Although the trusses shown in Figures 12-1, 12-2 and 12-3 are all symmetric from left to right, symmetry is not required for a structure to be classified as a truss. A truss is defined simply as a structure composed entirely of straight members, connected together at their ends with smooth pins, where all loads are applied at the pins. So, the asymmetric structure shown in Figure 12-4 also fits the basic definition of a truss.

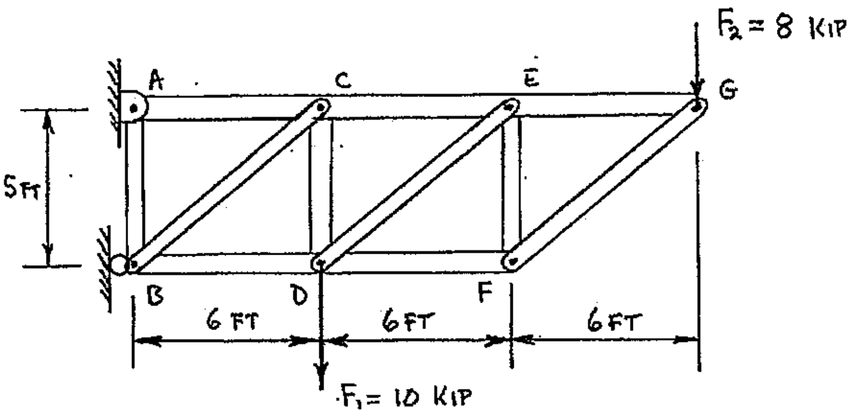

FIGURE 12-4 Asymmetric truss

METHOD OF SECTIONS

Truss analysis via the method of sections consists of partitioning (cutting) a truss into two parts (sections), and then applying static equilibrium to ONE of the sections. Each location on a section where a member has been cut will be modeled as a single force, since all truss members are two-force members. The single force will have a line of action that passes through the pins at each end of the member (again, because all truss members are two-force members). Because the member has been cut, the single force at each cut represents the INTERNAL force in the truss member (the internal *reaction* at the cut). The internal axial force in a truss member may also be described as the force being transferred THROUGH the member.

Internal axial forces have **MODE** (tension or compression), rather than direction and sense. The mode of each unknown internal axial force will be developed during the equilibrium solution for the unknown force. Answers reported for internal axial forces in truss members must have magnitude and mode.

A solution procedure for the method of sections is outlined below. This is a general procedure that can be applied to any planar truss, regardless of type or orientation.

A) Construct an initial diagram of the entire truss (your GIVEN diagram may be used).
B) Locate and identify the members of interest on the diagram from part A.
C) Sketch possible partitioning lines (cutting/section lines) on the initial diagram from part A.
   1. Cut at least one member of interest (if possible).
   2. Cut no more than three members (total), if possible.
D) Determine if the support reactions are required. If required, solve for the support reactions.
   1. Construct a FBD of the entire truss.
   2. Perform an equilibrium analysis (mentally).
   3. Develop and solve the appropriate equilibrium equations.
E) Construct a FBD of ONE of the sections.
   1. At each location where a member was cut, show the cut perpendicular to the longitudinal axis of the member.
   2. Model the internal force in each member (at the cut) as a single force, with a line of action that passes through the pins at each end of the member.
   3. ALWAYS show an unknown internal force in **tension** (pulling on the cut).
   4. Label the internal force using a capital P that has a double subscript (P_{XX}). Each letter in the double subscript represents one of the pins at the member's ends.
   5. Extend the lines of action for all of the unknown internal forces.
F) Perform an equilibrium analysis (mentally) of the chosen section's FBD.
G) Apply static equilibrium; develop/solve the appropriate equilibrium equations.
H) Properly report the final answer(s) → P_{XX} = magnitude (with units), and mode

Example 12-1 Calculate the internal force in members CE and DE of the truss shown below (the truss from Figure 12-4).

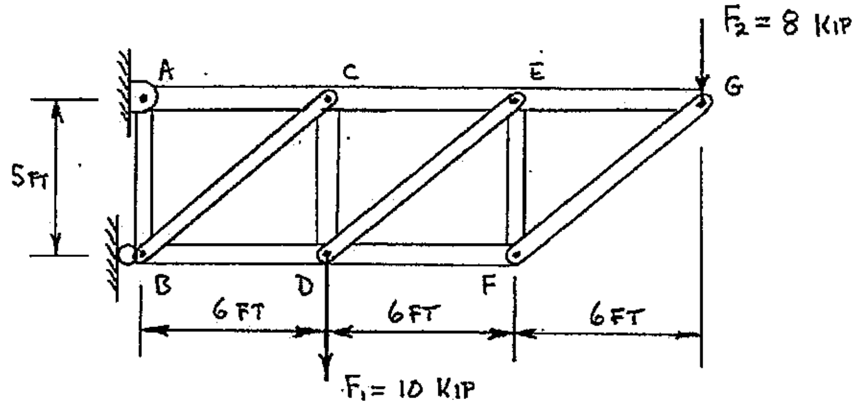

Members CE and DE are identified on the GIVEN diagram (repeated below) by drawing small "ovals" on each member. A partitioning line (the dashed line) was sketched that cuts through only three members, while also cutting through the two members of interest (CE and DE).

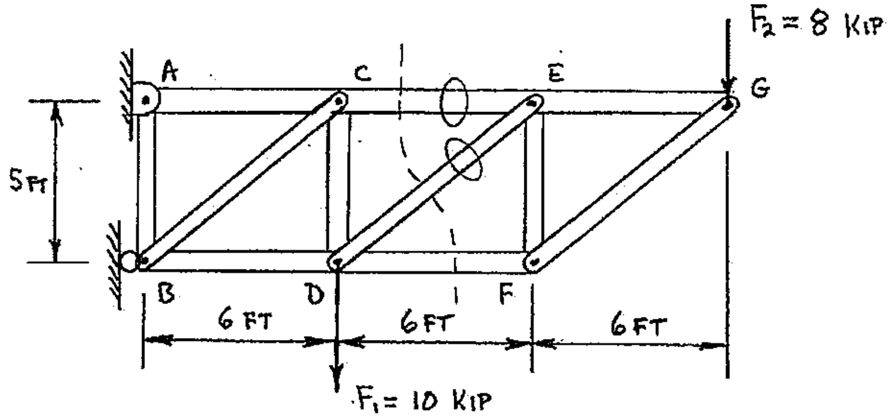

A free body diagram would now normally be constructed for ONE of the sections (the right section or the left section). FBD's for both the left and right sections have been developed for this example (see following page), mainly as a guide to how the diagrams are constructed. Note that on either of the free body diagrams the unknown internal forces in each cut member have been assumed to be in tension (pulling on the cut). The lines of action for the unknown forces have been extended, and their intersection points labeled. The internal force in member CE was labeled as P_{CE}, and the internal force in member DE was labeled as P_{DE}. All acting loads and reactions are shown ONLY on the FBD on which they appear. A sign convention has not been established for this pair of diagrams, but will be established when one of the diagrams is used to solve for the unknown internal forces.

Example 12-1: (cont'd)

<u>FBD of left section:</u>

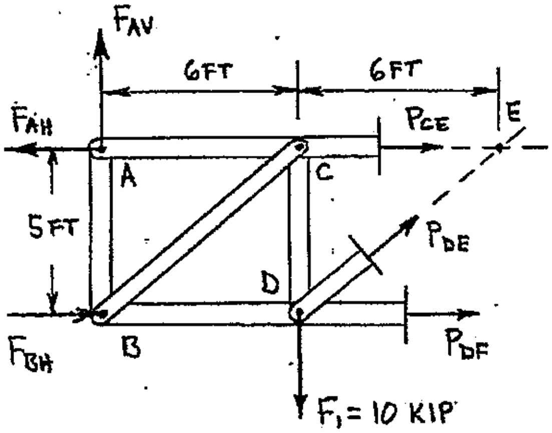

<u>FBD of right section:</u>

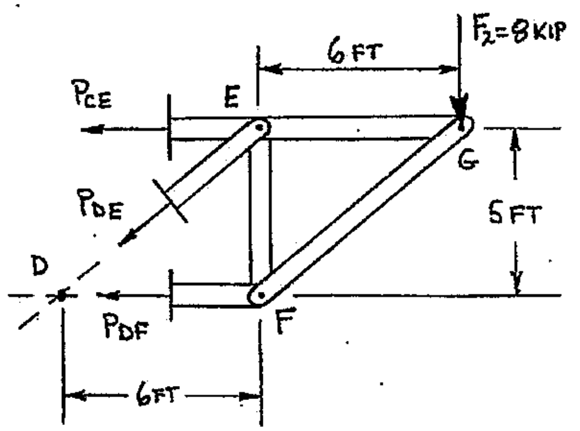

Good practice would be to solve for internal forces P_{CE} and P_{DE} using the FBD that leads to the most efficient solution. In this case, if the FBD of the right section is used, then the support reactions would not be required. Conversely, if the left section was used, you would first have to calculate the support reactions at A and B. So, using the FBD of the right section:

<u>FBD of right section</u>: (members CE, DE and DF "cut")

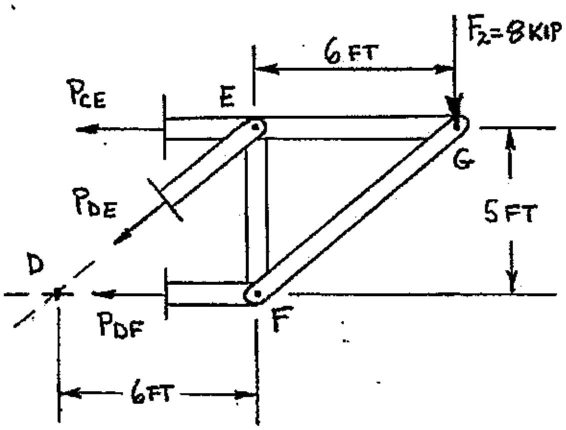

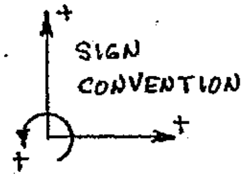

Equilibrium Analysis Table for FBD of Right Section: (shown here, but not required)

Principle	Unknowns	Action	Order of Solution
$\Sigma M_D = 0$	P_{CE}	Solve for P_{CE} using $\Sigma M_D = 0$	2
$\Sigma M_E = 0$	P_{DF}	Solve for P_{DF} using $\Sigma M_E = 0$	3
$\Sigma F_H = 0$	P_{CE}, P_{DE}, P_{DF}	None at this time	4 (verify solution)
$\Sigma F_V = 0$	P_{DE}	Solve for P_{DE} using $\Sigma F_V = 0$	1

Example 12-1: (cont'd)

Equilibrium equations can now be developed and solved to determine the unknown internal forces in members CE and DE.

Determine internal force P_{DE} using $\Sigma F_V = 0$:

$$\Sigma F_V = 0$$
$$0 = \pm P_{DE_V} \pm F_2$$
$$0 = -\left(\frac{5}{\sqrt{61}}\right) P_{DE} - F_2$$
$$P_{DE} = -(F_2)\left(\frac{\sqrt{61}}{5}\right)$$
$$P_{DE} = -(8\text{ kips})\left(\frac{\sqrt{61}}{5}\right)$$
$$P_{DE} = -12.4964\text{ kips}$$

NEGATIVE SIGN INDICATES DISAGREEMENT WITH MODE ASSUMED ON FBD OF RIGHT SECTION.

$$P_{DE} = 12.4964\text{ kips} \quad \text{(compression)}$$

Determine internal force P_{CE} using $\Sigma M_D = 0$:

$$\Sigma M_D = 0$$
$$0 = \pm P_{CE}(d\perp) \pm F_2(d\perp)$$
$$0 = +P_{CE}(5\text{ft}) - F_2(6\text{ ft} + 6\text{ ft})$$
$$P_{CE} = \frac{+F_2(12\text{ ft})}{5\text{ ft}}$$
$$P_{CE} = \frac{+(8\text{ kip})(12\text{ ft})}{5\text{ ft}}$$
$$P_{CE} = +19.2000\text{ kip}$$

POSITIVE SIGN INDICATES AGREEMENT WITH MODE ASSUMED ON FBD OF RIGHT SECTION.

$$P_{CE} = 19.20\text{ kip} \quad \text{(tension)}$$

Answers for Example 12-1 have been found, however, to verify these answers steps 3 and 4 (from the order of solution) would also need to be completed. Steps 3 and 4 are shown on the following page.

Example 12-1: (cont'd.)

Determine internal force P_{DF} using $\Sigma M_E = 0$: (not required, but good practice)

$$\Sigma M_E = 0$$
$$0 = \pm P_{DF}(d_\perp) \pm F_2(d_\perp)$$
$$0 = -P_{DF}(5\text{ ft}) - F_2(6\text{ ft})$$
$$P_{DF} = \frac{-F_2(6\text{ ft})}{5\text{ ft}}$$
$$P_{DF} = \frac{-(8\text{ kip})(6\text{ ft})}{5\text{ ft}}$$
$$P_{DF} = -9.60000\text{ kip}$$

NEGATIVE SIGN INDICATES DISAGREEMENT WITH MODE ASSUMED ON FBD OF RIGHT SECTION.

$$\underline{\underline{P_{DF} = 9.600\text{ kip} \quad (\text{compression})}}$$

Verify the solution using $\Sigma F_H = 0$: (not required, but good practice)

$$\Sigma F_H = 0$$
$$0 = \pm P_{CE} \pm P_{DE_H} \pm P_{DF}$$
$$0 = -P_{CE} - \left(\frac{6}{\sqrt{61}}\right)P_{DE} - P_{DF}$$
$$0 = -(+19.20\text{ kip}) - \left(\frac{6}{\sqrt{61}}\right)(-12.4964\text{ kip}) - (-9.600\text{ kip})$$
$$\underline{\underline{0 = 0}}$$

Solution verified - OK

Answer:

P_{CE} = 19.20 kip (tension)

P_{DE} = 12.50 kip (compression)

SOLUTIONS THAT REQUIRE MULTIPLE PARTITIONS OF A TRUSS

Multiple partitions are sometimes required to solve for the internal forces in particular truss members. Consider the gambrel truss loaded and supported as shown in Figure 12-5. The dashed lines represent two different partitioning lines that are described in the paragraphs that follow Figure 12-5.

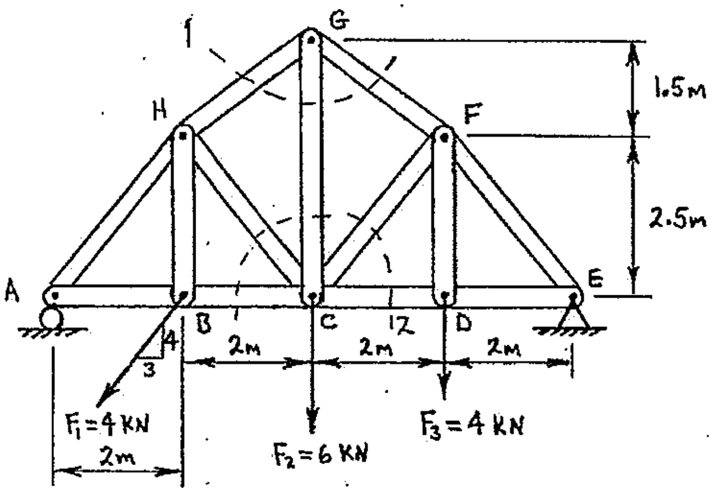

FIGURE 12-5 A gambrel truss (partitioning lines 1 and 2 shown)

If the task was to determine the internal force in member CG, a section could be cut from around pin G (partitioning line 1). Only three truss members were cut, including the member of interest (CG), and a partial FBD of joint G was constructed (Figure 12-6). There are three unknown internal forces (P_{CG}, P_{HG} and P_{FG}) and only two equilibrium equations ($\Sigma F_X = 0$ and $\Sigma F_Y = 0$) available for this concurrent-coplanar system. So, an equilibrium analysis of joint G would reveal that P_{CG} can not be found using only the FBD of joint G.

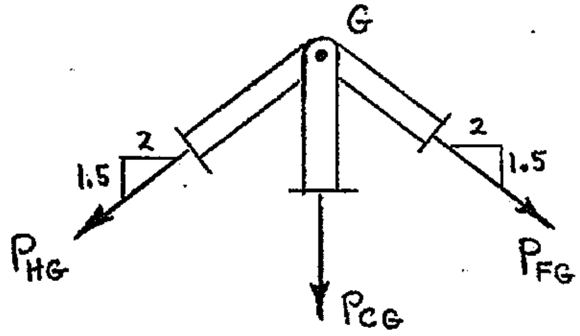

FIGURE 12-6 Partial free body diagram of joint G

A section could also be cut from around pin C (partitioning line 2), but it would be necessary to cut five truss members to separate that section from the original truss. There would then be five unknown internal forces shown on the partial FBD of joint C

(Figure 12-7), and again only two equilibrium equations ($\Sigma F_X = 0$ and $\Sigma F_Y = 0$) are available. So, P_{CG} can not be determined using only the FBD of joint C.

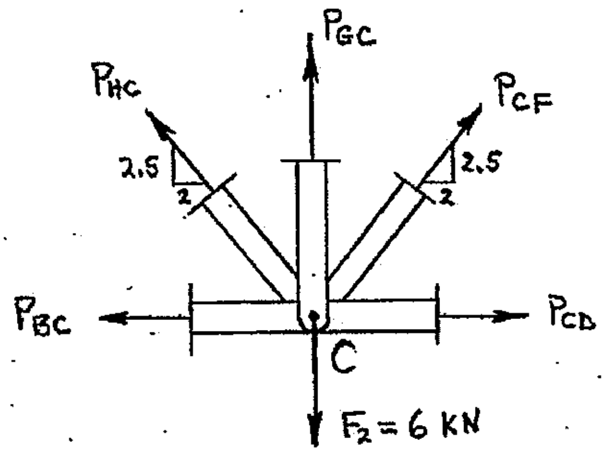

FIGURE 12-7 Partial free body diagram of joint C

Since there are only three unknown internal forces shown on the FBD of Joint G (previous page), a reasonable approach would be to solve for one of the unknown internal forces using a free body diagram of another section cut from the original truss. Section line 3, shown in Figure 12-8, would partition the original truss into two sections, either of which has only three unknown internal forces (P_{HG}, P_{HC} and P_{BC}). Since either section represents a non-concurrent coplanar system, there would be three equilibrium equations available ($\Sigma F_X = 0$, $\Sigma F_Y = 0$ and $\Sigma M_P = 0$) and each of the three unknown internal forces could be found.

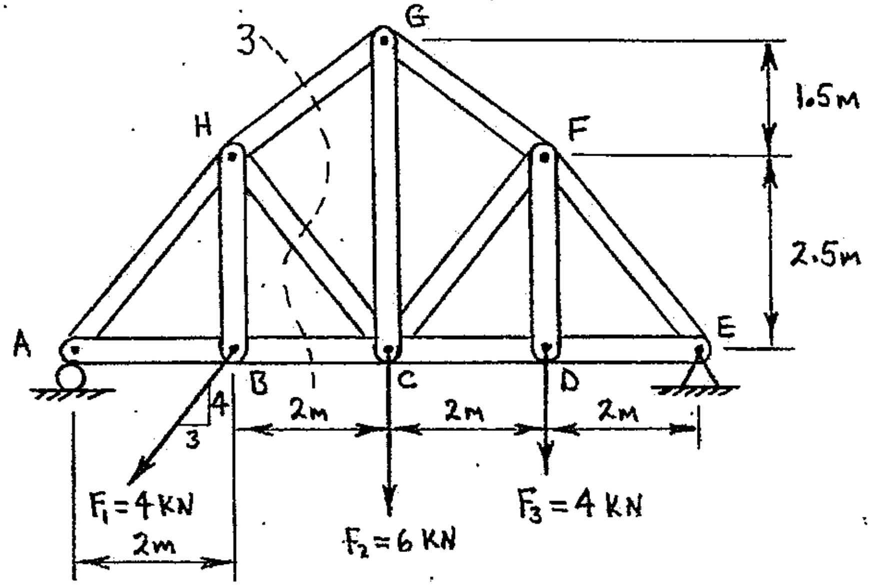

FIGURE 12-8 Gambrel truss with section line 3 (members HG, HC and BC "cut")

A partial FBD of the left section is shown in Figure 12-9. Once the internal force P_{HG} has been determined (using $\Sigma M_C = 0$), it could then be transferred to member HG in the FBD of joint G. There would then be only two unknown internal forces on the FBD of joint G and both could be determined. A numerical solution for the internal force P_{HG} is shown in Example 12-2.

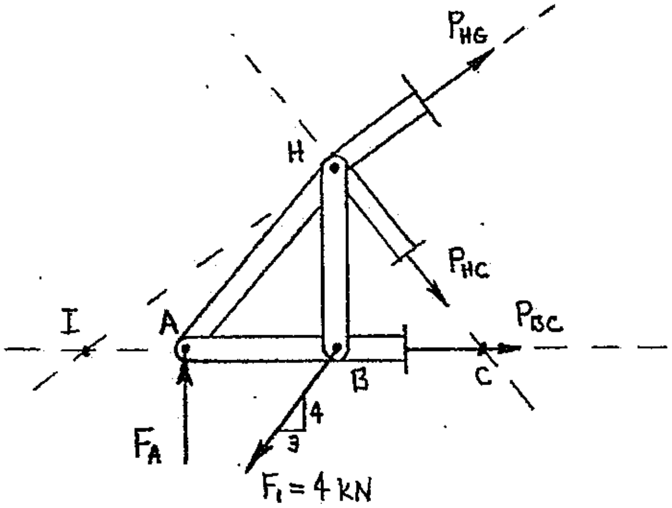

FIGURE 12-9 Partial FBD of the left section of the gambrel truss

Example 12-2: A truss is loaded and supported as shown below. Determine the internal force in member CG.

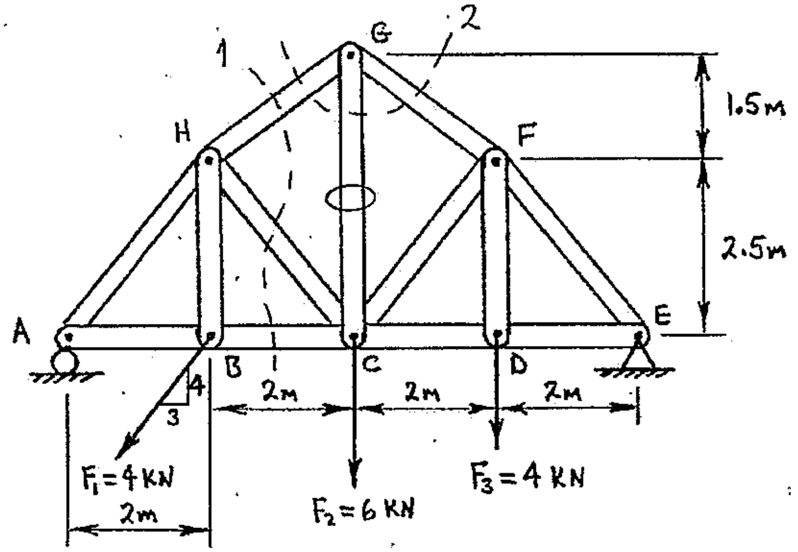

The member of interest (CG) is first identified on the <u>GIVEN</u> diagram by sketching an "oval" on the member. A single partitioning line will not allow a solution for the internal force in member CG, so two different sections will be cut from the original truss. Partitioning line 1 establishes a left and right section by cutting three members (HG, HC and BC). Partitioning line 2 is used to develop the section around joint G, essentially partitioning the truss into a small upper section that contains only joint G, and a much larger lower section (that contains everything else).

Example 12-2: (cont'd.)

A free body diagram of the left section (from partitioning line 1) will be used to determine the internal force in member HG. The support reaction of the roller at joint A will be required on the FBD of the left section, so a free body diagram of the entire truss will be required to solve for the support reactions.

FBD OF ENTIRE TRUSS:

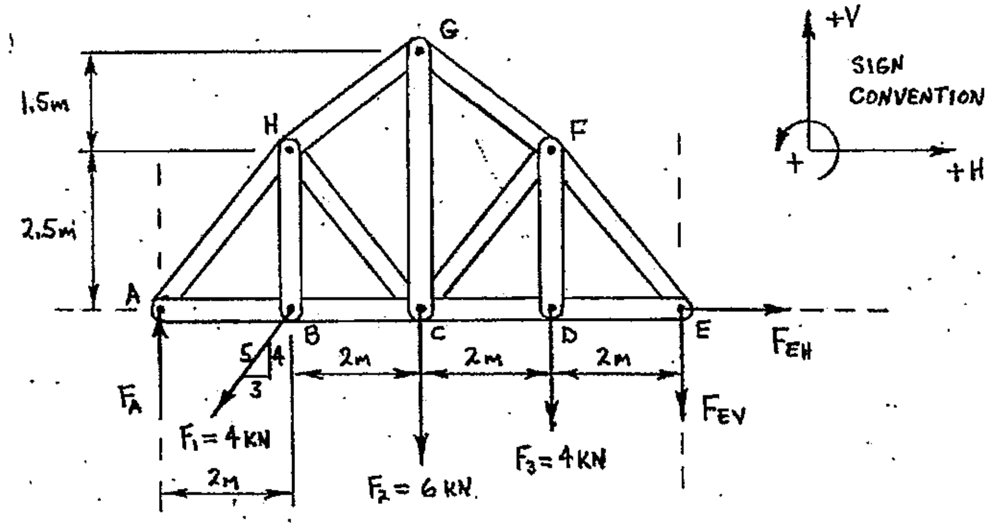

EQUILIBRIUM ANALYSIS TABLE FOR FBD OF ENTIRE TRUSS (shown here, but not required)

Principle	Unknowns	Action	Order of Solution
$\Sigma M_A = 0$	F_{EV}	Solve for F_{EV} using $\Sigma M_A = 0$	2
$\Sigma M_E = 0$	F_A	Solve for F_A using $\Sigma M_E = 0$	1
$\Sigma F_H = 0$	F_{EH}	Solve for F_{EH} using $\Sigma F_H = 0$	3
$\Sigma F_V = 0$	F_A, F_{EV}	None at this time	4 (verify solution)

Determine the support reactions by following the order of solution shown above.

Determine F_A using $\Sigma M_E = 0$:

$$\Sigma M_E = 0$$

$$0 = \pm[(F_A)(d_\perp)] \pm [(F_{1V})(d_\perp)] \pm [(F_2)(d_\perp)] \pm [(F_3)(d_\perp)]$$

$$0 = -[(F_A)(8\,m)] + \left[\left(\frac{4}{5}\right)(F_1)(6\,m)\right] + [(F_2)(4\,m)] + [(F_3)(2\,m)]$$

$$F_A = \frac{+\left[\left(\frac{4}{5}\right)(F_1)(6\,m)\right] + [(F_2)(4\,m)] + [(F_3)(2\,m)]}{8\,m}$$

cont'd.

Example 12-2: (cont'd.)

$$F_A = \frac{+\left[\left(\frac{4}{5}\right)(F_1)(6\,m)\right]+\left[(F_2)(4\,m)\right]+\left[(F_3)(2\,m)\right]}{8\,m}$$

$$F_A = \frac{+\left[\left(\frac{4}{5}\right)(4\,kN)(6\,m)\right]+\left[(6\,kN)(4\,m)\right]+\left[(4\,kN)(2\,m)\right]}{8\,m}$$

$$F_A = +6.400\,kN$$

$$F_A = \underline{\underline{6.400\,kN\ \uparrow}}$$

The vertical reaction at A (F_A) is the only reaction that will be required to solve for internal forces when using a free body diagram of the left section. However, good standard practice would be to solve for all of the support reactions and then complete a "check solution" to verify that the reactions are correct before using their values in subsequent calculations.

Determine the vertical reaction at E using $\Sigma M_A = 0$:

$$\Sigma M_A = 0$$

$$0 = \pm\left[(F_{1V})(d_\perp)\right]\pm\left[(F_2)(d_\perp)\right]\pm\left[(F_3)(d_\perp)\right]\pm\left[(F_{EV})(d_\perp)\right]$$

$$0 = -\left[\left(\frac{4}{5}\right)(F_1)(2\,m)\right]-\left[(F_2)(4\,m)\right]-\left[(F_3)(6\,m)\right]-\left[(F_{EV})(8\,m)\right]$$

$$F_{EV} = \frac{-\left[\left(\frac{4}{5}\right)(F_1)(2\,m)\right]-\left[(F_2)(4\,m)\right]-\left[(F_3)(6\,m)\right]}{8\,m}$$

$$F_{EV} = \frac{-\left[\left(\frac{4}{5}\right)(4\,kN)(2\,m)\right]-\left[(6\,kN)(4\,m)\right]-\left[(4\,kN)(6\,m)\right]}{8\,m}$$

$$F_{EV} = -6.800\,kN$$

$$F_{EV} = \underline{\underline{6.800\,kN\ \uparrow}}$$

Determine the horizontal reaction using $\Sigma F_H = 0$:

$$\Sigma F_H = 0$$

$$0 = \pm F_{1H} \pm F_{EH}$$

$$0 = -\left(\frac{3}{5}\right)F_1 + F_{EH}$$

cont'd.

Example 12-2: (cont'd.)

$$F_{EH} = +\left(\frac{3}{5}\right)F_1$$

$$F_{EH} = +\left(\frac{3}{5}\right)(4\,kN)$$

$$F_{EH} = +2.400\,kN$$

$$F_{EH} = \underline{\underline{2.400\,kN \;\rightarrow}}$$

The support reactions can now be verified using $\Sigma F_V = 0$:

$$\Sigma F_V = 0$$

$$0 = \pm F_A \pm F_{1V} \pm F_2 \pm F_3 \pm F_{EV}$$

$$0 = +F_A - \left(\frac{4}{5}\right)F_1 - F_2 - F_3 - F_{EV}$$

$$0 = +(+6.400\,kN) - \left(\frac{4}{5}\right)(4\,kN) - 6\,kN - 4\,kN - (-6.800\,kN)$$

$\underline{\underline{0 = 0}}$ Solution verified; support reactions are correct.

A free body diagram of the left section is now constructed, and the calculated value for support reaction F_A is shown on the FBD.

<u>FBD OF LEFT SECTION</u>: (from partitioning line 1; members HG, HC and BC "cut")

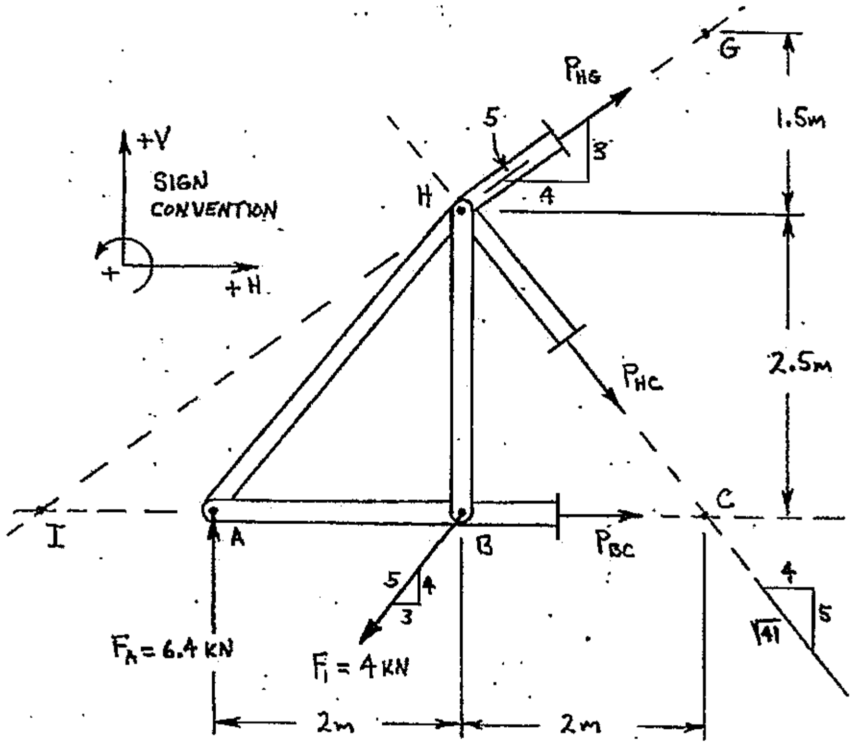

Example 12-2: (cont'd.)

Internal force P_{HG} can now be found by $\Sigma M_C = 0$ using the FBD of the left section. P_{HG} will be applied at pin H (from transmissibility), and its components will be used when developing the initial algebraic statement.

$$\Sigma M_C = 0$$

$$0 = \pm\left[(P_{HG_H})(d_\perp)\right] \pm \left[(P_{HG_V})(d_\perp)\right] \pm \left[(F_A)(d_\perp)\right] \pm \left[(F_{1V})(d_\perp)\right]$$

$$0 = -\left[\left(\frac{4}{5}\right)(P_{HG})(2.5\,m)\right] - \left[\left(\frac{3}{5}\right)(P_{HG})(2\,m)\right] - \left[(F_A)(4\,m)\right] + \left[\left(\frac{4}{5}\right)(F_1)(2\,m)\right]$$

$$+\left[\left(\frac{4}{5}\right)(P_{HG})(2.5\,m)\right] + \left[\left(\frac{3}{5}\right)(P_{HG})(2\,m)\right] = -\left[(F_A)(4\,m)\right] + \left[\left(\frac{4}{5}\right)(F_1)(2\,m)\right]$$

$$P_{HG}\left[+\left(\frac{4}{5}\right)(2.5\,m) + \left(\frac{3}{5}\right)(2\,m)\right] = -\left[(F_A)(4\,m)\right] + \left[\left(\frac{4}{5}\right)(F_1)(2\,m)\right]$$

$$P_{HG} = \frac{-\left[(F_A)(4\,m)\right] + \left[\left(\frac{4}{5}\right)(F_1)(2\,m)\right]}{\left[+\left(\frac{4}{5}\right)(2.5\,m) + \left(\frac{3}{5}\right)(2\,m)\right]}$$

$$P_{HG} = \frac{-\left[(6.4\,kN)(4\,m)\right] + \left[\left(\frac{4}{5}\right)(4\,kN)(2\,m)\right]}{\left[+\left(\frac{4}{5}\right)(2.5\,m) + \left(\frac{3}{5}\right)(2\,m)\right]}$$

$$P_{HG} = -6.000\,kN$$

NEGATIVE SIGN INDICATES DISAGREEMENT WITH MODE ASSUMED ON FBD.

$$P_{HG} = 6.000\,kN \quad \text{(compression)}$$

Internal force P_{HG} can now be applied when developing the FBD of joint G (the upper section defined by cutting plane 2, shown in the GIVEN diagram on page 12-11). Convention is to assume a mode of tension (pulling on the cut) for all unknown internal forces shown on a free body diagram. However, the mode of internal force P_{HG} is now KNOWN and was found to be compression , so P_{HG} ***must by shown with its correct mode*** when used on any subsequent free body diagrams.

Since the magnitude and mode of internal force P_{HG} have been established, a free body diagram of the section cut around joint G can be constructed next, and this FBD will now have only two unknown internal forces (P_{CG} and P_{FG}).

Example 12-2: (cont'd.)

FBD OF JOINT G: (from partitioning line 2; members HG, FG and CG "cut")

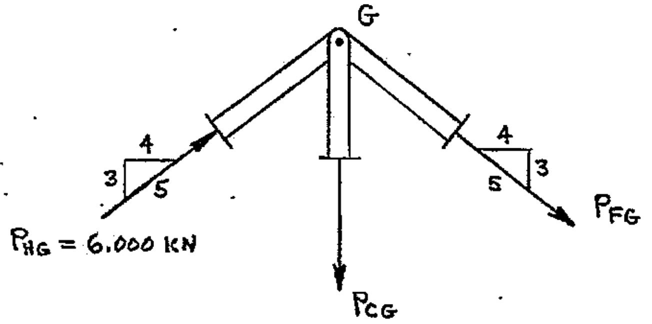

Determine internal force P_{FG} by $\Sigma F_H = 0$:

$$\Sigma F_H = 0$$
$$0 = \pm P_{HG_H} \pm P_{FG_H}$$
$$0 = +\left(\frac{4}{5}\right)P_{HG} + \left(\frac{4}{5}\right)P_{FG}$$
$$P_{FG} = -\left(\frac{4}{5}\right)(P_{HG})\left(\frac{5}{4}\right)$$
$$P_{FG} = -\left(\frac{4}{5}\right)(6.000\text{ kN})\left(\frac{5}{4}\right)$$
$$P_{FG} = -6.000\text{ kN}$$
$$P_{FG} = \underline{\underline{6.000\text{ kN} \quad \text{(compression)}}}$$

The internal force P_{CG} can now be found by $\Sigma F_V = 0$. Because the signs in the initial algebraic statement were based on the assumed modes shown on the FBD, you must remember to include the entire numeric answer (including the minus sign) for P_{FG}.

$$\Sigma F_V = 0$$
$$0 = \pm P_{HG_V} \pm P_{CG} \pm P_{FG_V}$$
$$0 = +\left(\frac{3}{5}\right)P_{HG} - P_{CG} - \left(\frac{3}{5}\right)P_{FG}$$
$$P_{CG} = +\left(\frac{3}{5}\right)P_{HG} - \left(\frac{3}{5}\right)P_{FG}$$
$$P_{CG} = +\left(\frac{3}{5}\right)(6.000\text{ kN}) - \left(\frac{3}{5}\right)(-6.000\text{ kN})$$
$$P_{CG} = +7.200\text{ kN}$$
$$P_{CG} = \underline{\underline{7.200\text{ kN} \quad \text{(tension)}}}$$

> Answer:
>
> P_{CG} = 7.200 kN (tension)

Zero-Force Members

For certain load conditions, it is possible for some members of a truss to have zero internal force; these members are called **zero-force members**. A zero-force member should not necessarily be removed from a truss just because the member can be proven to have zero internal force for a particular loading. Often these zero-force members are required for stability during assembly or transport of the truss. If the original loading on the truss must be changed at some time in the future the "zero-force" member may then experience a substantial internal force and contribute greatly to the load carrying capability of the truss.

A truss with applied loads and calculated support reactions is shown in Figure12-10. If the truss is partitioned such that members CD, CF and GF are "cut", a free body diagram of the right section could be constructed as shown in Figure 12-11.

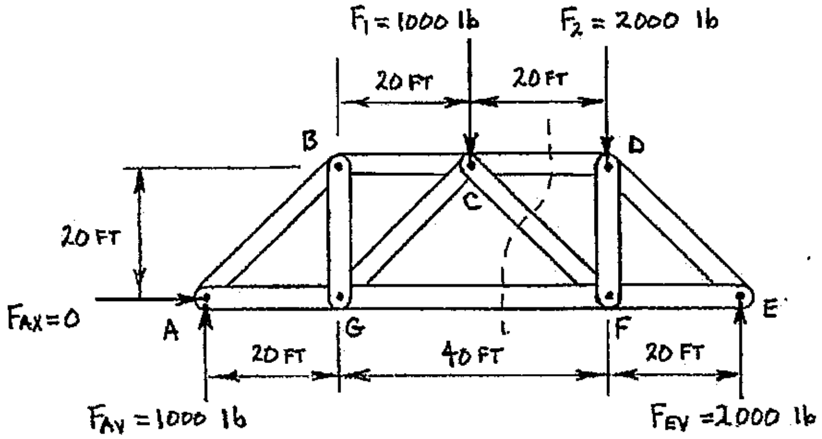

FIGURE 12-10 Truss with applied loads and calculated support reactions

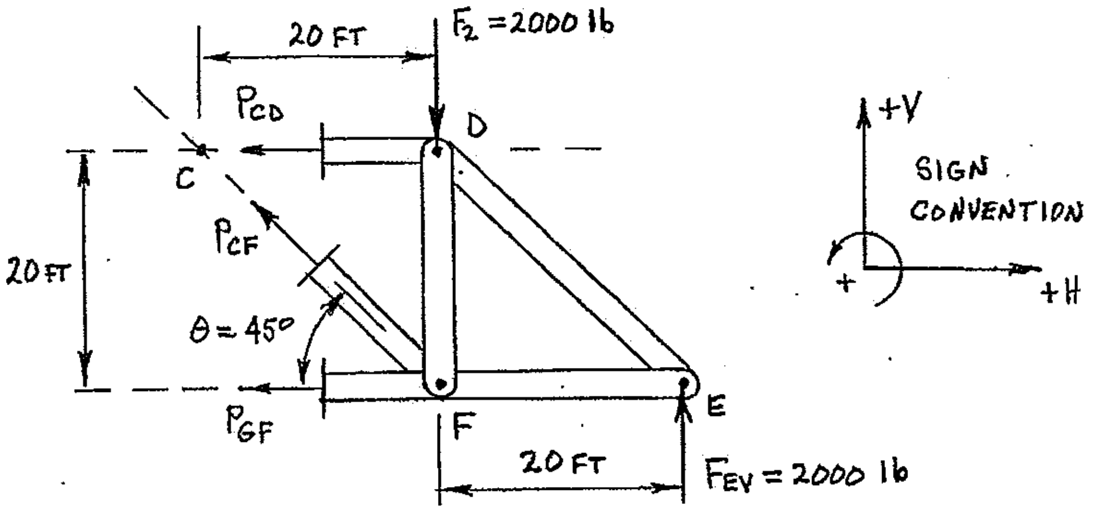

FIGURE 12-11 FBD of right section of truss shown in Figure 12-10

Equilibrium equations could then be developed (using the FBD of the right section) to solve for the unknown internal forces P_{CD}, P_{CF} and P_{GF}. A force equilibrium equation developed in the vertical direction to calculate the unknown internal force P_{CF} would return a value of $P_{CF} = 0$, as seen in the following calculations:

$$\Sigma F_V = 0$$

$$0 = \pm P_{CF_V} \pm F_2 \pm F_{E_V}$$

$$0 = +P_{CF}\left(\cos 45^0\right) - F_2 + F_{E_V}$$

$$P_{CF} = \frac{+F_2 - F_{E_V}}{\cos 45^0}$$

$$P_{CF} = \frac{+2000\text{ lb} - 2000\text{ lb}}{\cos 45^0}$$

$$P_{CF} = \underline{\underline{0}} \qquad \text{**}(P_{CF} \text{ is a zero-force member})$$

Member CF has been shown to be a <u>zero-force member</u> ***<u>for this loading condition</u>***. However, if the loading condition changes member CF could have a substantial internal force due to the change in loading.

Example 12-3 A truss is loaded as shown below. Calculate the internal force in members AD, CD, and CE.

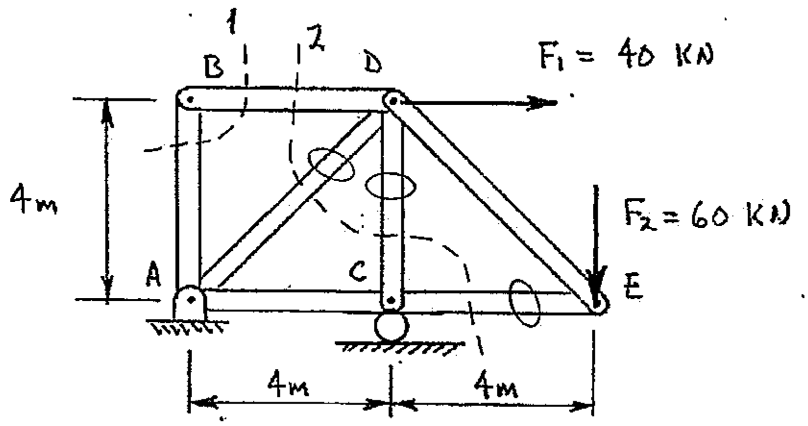

"Ovals" have been sketched on each member of interest in the <u>GIVEN</u> diagram shown above. Members AB and BD could be cut away from the rest of the truss to create a section around joint B (section line 1); the internal force in member BD could then be found. Section line 2 can then be used to partition the truss a second time to construct a free body diagram of the right section. Even though four members are cut to develop the FBD of the right section, the internal force in member BD will already be known from the equilibrium solution developed using the FBD of joint B.

Example 12-3: (cont'd.)

FBD of joint B: (from section line 1; "cut" members AB and BD)

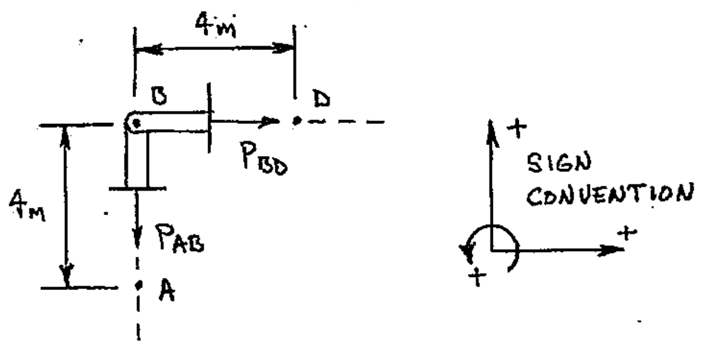

Since there are no applied forces acting at pin B, the internal force in both member BD and member AB must be equal to zero. A force equilibrium equation in the horizontal direction can be used to prove that the internal force in member BD is equal to zero:

$$\Sigma F_H = 0$$

$$0 = \pm P_{BD}$$

$$\underline{\underline{P_{BD} = 0}}$$

Next, a free body diagram can be constructed of the upper right section of the truss, with members BD, AD, CD, and DE all "cut" to partition the truss. Even though four members were cut, it has already been established that the internal force in member BD is equal to zero. None of the support reactions appear on this free body diagram, so the support reactions will not be required for the solution of this problem.

FBD of upper right section: (from section line 2; members BD, AD, CD, and DE "cut")

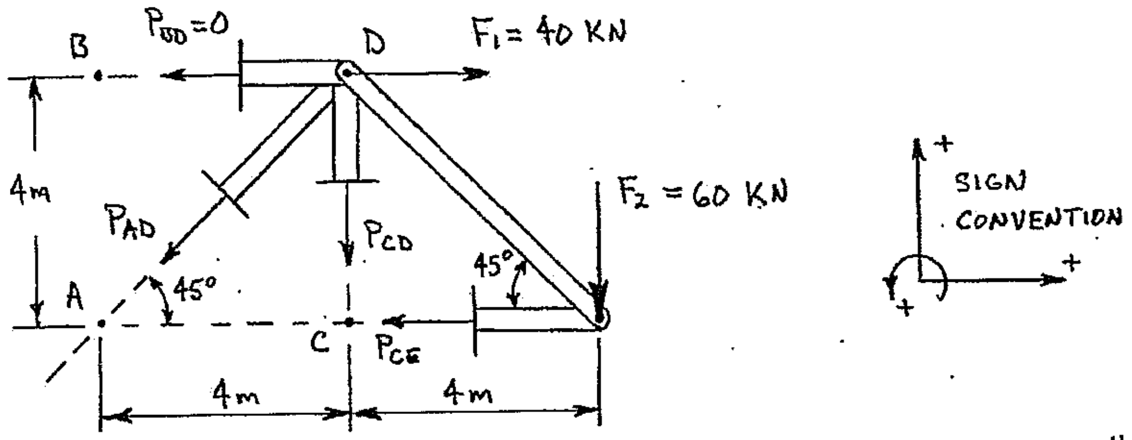

cont'd.

Example 12-3: (cont'd.)

The internal force in member CD can be found by developing a moment equilibrium equation with respect to pin A:

$$\Sigma M_A = 0$$
$$0 = \pm\left[P_{CD}(d_\perp)\right] \pm \left[F_1(d_\perp)\right] \pm \left[F_2(d_\perp)\right]$$
$$0 = -\left[P_{CD}(4\,m)\right] - \left[F_1(4\,m)\right] - \left[F_2(8\,m)\right]$$
$$P_{CD} = \frac{-\left[F_1(4\,m)\right] - \left[F_2(8\,m)\right]}{4\,m}$$
$$P_{CD} = \frac{-\left[(40\,kN)(4\,m)\right] - \left[(60\,kN)(8\,m)\right]}{4\,m}$$
$$P_{CD} = -160.000\,kN$$
$$P_{CD} = \underline{\underline{160.0\,kN \quad (compression)}}$$

The internal force in member CE can be found by developing a moment equilibrium equation with respect to pin D:

$$\Sigma M_D = 0$$
$$0 = \pm\left[P_{CE}(d_\perp)\right] \pm \left[F_2(d_\perp)\right]$$
$$0 = -\left[P_{CE}(4\,m)\right] - \left[F_2(4\,m)\right]$$
$$P_{CE} = \frac{-\left[F_2(4\,m)\right]}{4\,m}$$
$$P_{CE} = \frac{-\left[(60\,kN)(4\,m)\right]}{4\,m}$$
$$P_{CE} = -60.0000\,kN$$
$$P_{CE} = \underline{\underline{60.00\,kN \quad (compression)}}$$

The internal force in member CE can be found by developing and solving a moment equilibrium equation with respect to pin C. Internal axial force P_{AD} will be assumed to be acting at pin D, and its components will be used in the solution developed on the following page (components of P_{AD} are not shown on the FBD).

cont'd.

Example 12-3: (cont'd.)

$$\Sigma M_C = 0$$

$$0 = \pm P_{AD_V}(d_\perp) \pm F_1(d_\perp) \pm F_2(d_\perp)$$

$$0 = +\left[(P_{AD})(\cos 45^0)(4\,m)\right] - \left[(F_1)(4\,m)\right] - \left[(F_2)(4\,m)\right]$$

$$P_{AD} = \frac{-\left[(F_1)(4\,m)\right] - \left[(F_2)(4\,m)\right]}{(\cos 45^0)(4\,m)}$$

$$P_{AD} = \frac{-\left[(40\,kN)(4\,m)\right] - \left[(60\,kN)(4\,m)\right]}{(\cos 45^0)(4\,m)}$$

$$P_{AD} = +141.423\,kN$$

$$P_{AD} = \underline{\underline{141.423\,kN \quad (\text{tension})}}$$

The answers for this problem are:

<u>Answers</u>:

P_{AD} = 141.4 kN (tension

P_{CD} = 160.0 kN (compression)

P_{CE} = 60.00 kN (compression)

SUMMARY

A truss is a structure composed of straight, slender members that are pinned together at their ends. The structural efficiency of a truss is based on the geometric rigidity of triangles, and common types of trusses are built-up from a number of triangular elements. Forces are applied only at the pins of truss members, so all truss members can be defined as two-force members and are subjected to only axial tensile and compressive forces.

To determine the internal axial loads in truss members, a truss is partitioned ("cut") into two sections and then a free body diagram in constructed for <u>ONE</u> of the sections. Equilibrium equations are developed from the FBD to determine the unknown internal axial forces.

Zero-force members (members with internal axial force = 0) sometimes appear in a truss, but only for a particular loading of the truss. Future changes to the loading may result in substantial internal force in a member that was originally a zero-force member.

FURTHER EXAMPLE PROBLEMS (solutions in GFSA format are on the following pages)

Example 12-4 A truss is loaded as shown below. Determine the internal axial force in member BC.

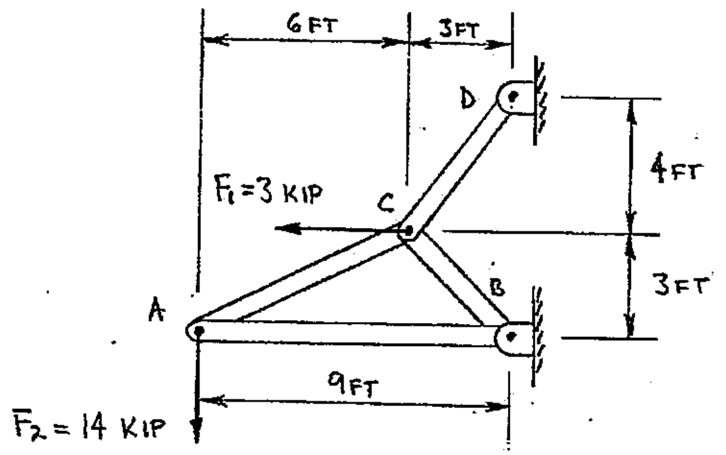

Example 12-5 A truss is loaded as shown below, and the calculated support reactions are shown applied at pins A and H. Determine the internal axial force in members BC, BD and EG.

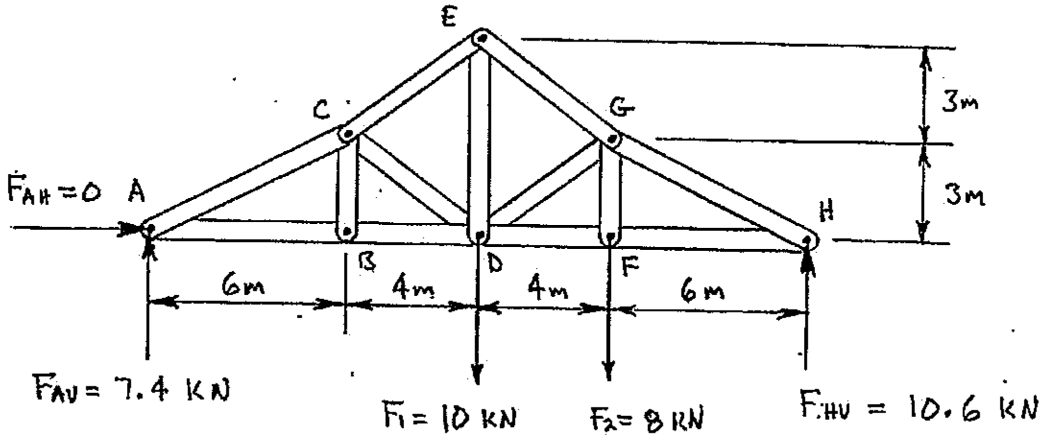

PROBLEM: EXAMPLE 12-4

GIVEN: A TRUSS IS LOADED AS SHOWN BELOW.

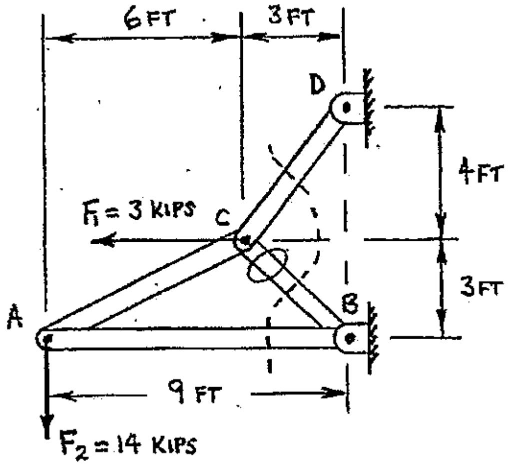

FIND: DETERMINE THE INTERNAL FORCE IN MEMBER BC.

SOLUTION:

FBD OF LEFT SECTION: (MEMBERS CD, BC AND AB "CUT")

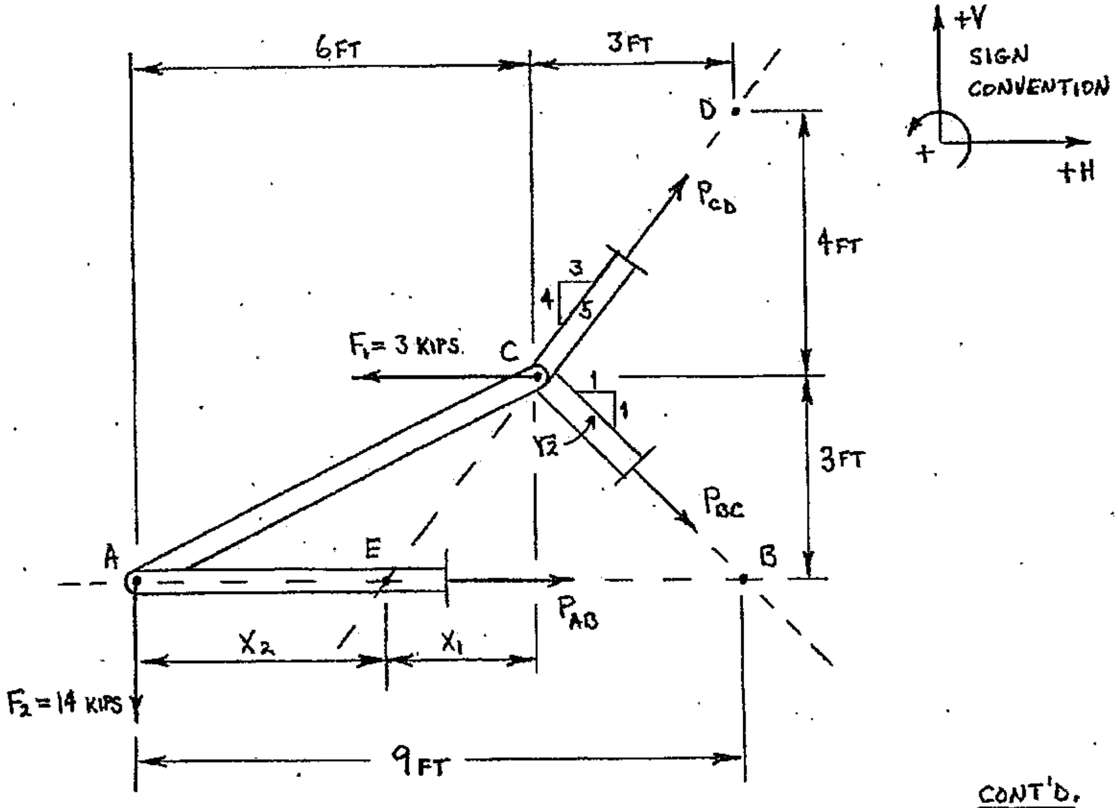

CONT'D.

PROBLEM: EXAMPLE 12-4 (CONT'D.)

DETERMINE DISTANCE X_1: (FROM SIMILAR TRIANGLES)

$$\frac{X_1}{3FT} = \frac{3}{4}$$

$$X_1 = \left(\frac{3}{4}\right)(3FT)$$

$$X_1 = \underline{\underline{2.2500\ FT}}$$

DETERMINE P_{BC}: (WITH P_{BC} APPLIED AT POINT B)

$$\Sigma M_E = 0$$

$$0 = \pm[(F_1)(d\perp)] \pm [(F_2)(d\perp)] \pm [(P_{BCy})(d\perp)]$$

$$0 = +[(F_1)(3FT)] + [(F_2)(6FT - X_1)] - [(1/\sqrt{2})(P_{BC})(3FT + X_1)]$$

$$P_{BC} = \frac{+[(F_1)(3FT)] + [(F_2)(6FT - X_1)]}{(1/\sqrt{2})(3FT + X_1)}$$

$$P_{BC} = \frac{+[(3\ KIPS)(3FT)] + [(14\ KIPS)(6FT - 2.25FT)]}{(1/\sqrt{2})(3FT + 2.25FT)}$$

$$P_{BC} = +16.5665\ KIPS$$

$$P_{BC} = \underline{\underline{16.5665\ KIPS\ \ (TENSION)}}$$

ANSWER:

$P_{BC} = 16.57$ KIPS (TENSION)

PROBLEM: EXAMPLE 12-5

GIVEN: A TRUSS IS LOADED AS SHOWN BELOW, AND THE CALCULATED SUPPORT REACTIONS ARE SHOWN APPLIED AT PINS A AND H.

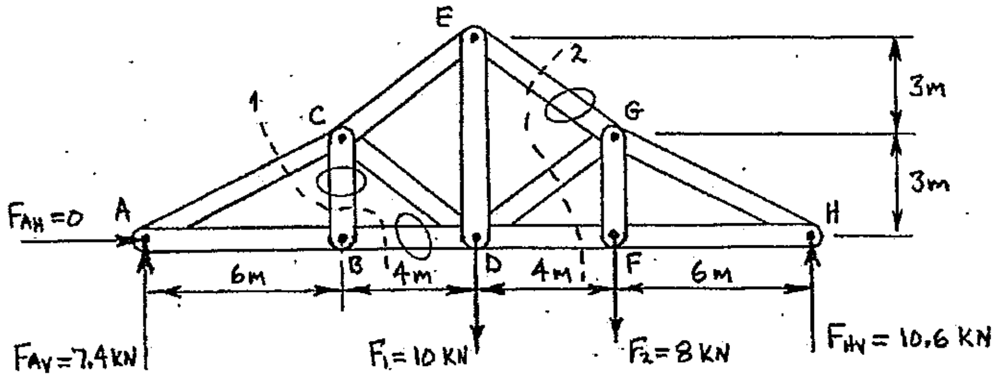

FIND: DETERMINE THE INTERNAL AXIAL FORCE IN MEMBERS BC, BD AND EG.

SOLUTION:

FBD OF LEFT SECTION: (FROM SECTION LINE 1)

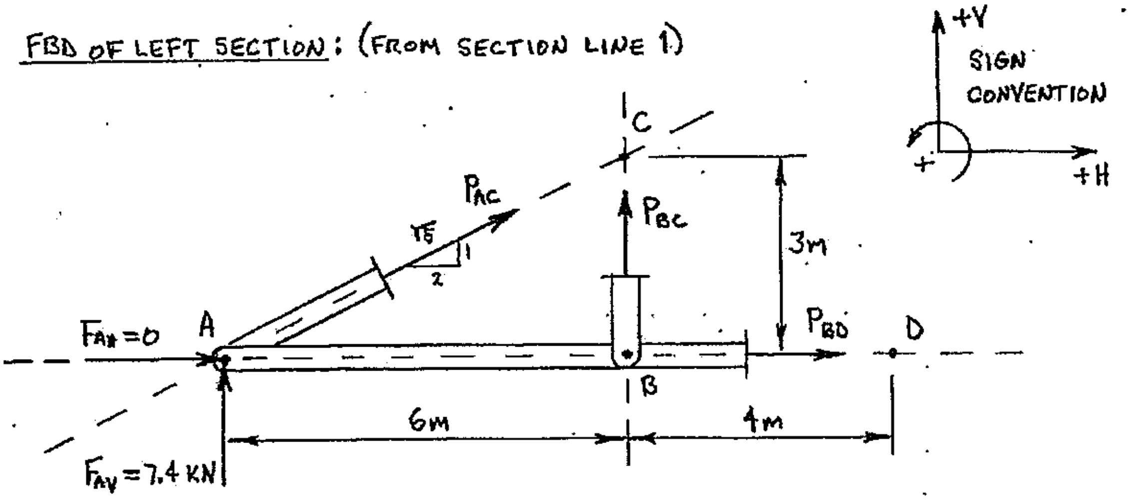

DETERMINE INTERNAL FORCE P_{BC}:

$$\Sigma M_A = 0$$

$$0 = \pm[(P_{BC})(d\perp)]$$

$$\underline{P_{BC} = 0}$$

CONT'D.

PROBLEM: EXAMPLE 12-5 (CONT'D.)

DETERMINE INTERNAL FORCE P_{BD}: (USING FBD OF LEFT SECTION, PREVIOUS PAGE)

$$\Sigma M_C = 0$$

$$0 = \pm[(F_{AV})(d\perp)] \pm [(P_{BD})(d\perp)]$$

$$0 = -[(F_{AV})(6m)] + [(P_{BD})(3m)]$$

$$P_{BD} = \frac{+[(F_{AV})(6m)]}{3m}$$

$$P_{BD} = \frac{+[(7.4\ kN)(6m)]}{3m}$$

$$P_{BD} = +14.8000\ kN$$

$$P_{BD} = \underline{14.8000\ kN\ (TENSION)}$$

FBD OF RIGHT SECTION: (FROM SECTION LINE 2)

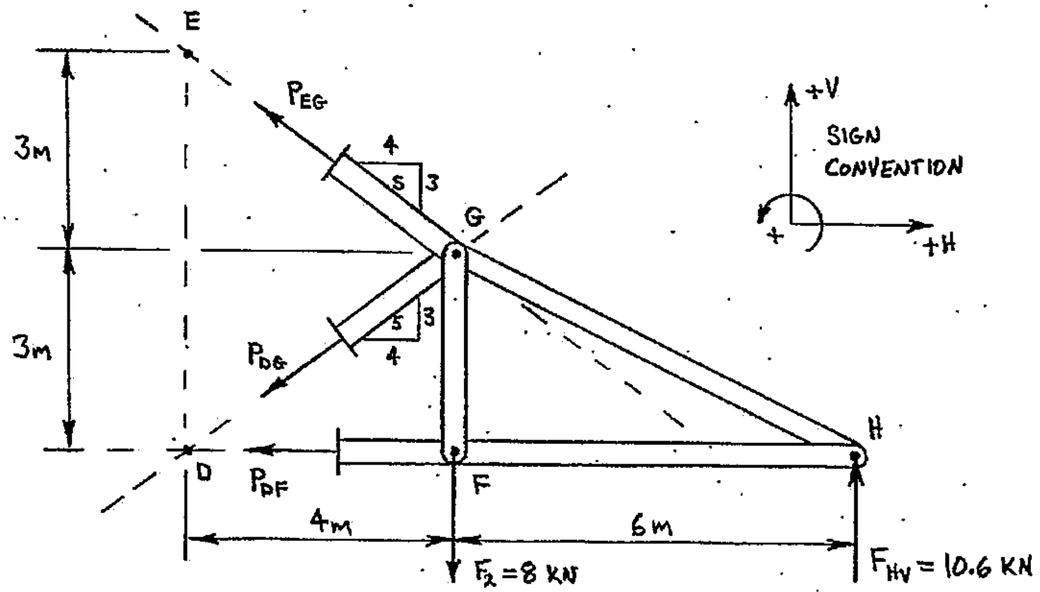

DETERMINE INTERNAL FORCE P_{EG}: (ASSUME P_{EG} APPLIED @ E)

$$\Sigma M_D = 0$$

$$0 = \pm[(P_{EG_H})(d\perp)] \pm [(F_2)(d\perp)] \pm [(F_{HV})(d\perp)]$$

CONT'D.

PROBLEM: EXAMPLE 12-5 (CONT'D.)

$$0 = +[(4/5)(P_{EG})(6\,m)] - [(F_2)(4\,m)] + [(F_{HV})(10\,m)]$$

$$P_{EG} = \frac{+[(F_2)(4\,m)] - [(F_{HV})(10\,m)]}{(4/5)(6\,m)}$$

$$P_{EG} = \frac{+[(8\,kN)(4\,m)] - [(10.6\,kN)(10\,m)]}{(4/5)(6\,m)}$$

$$P_{EG} = -15.4167\ kN$$

$$P_{EG} = \underline{15.4167\ kN\ (\text{COMPRESSION})}$$

ANSWER:

$P_{BC} = 0$

$P_{BD} = 14.80\ kN$ (TENSION)

$P_{EG} = 15.42\ kN$ (COMPRESSION)

PRACTICE PROBLEMS

12.1 A truss is loaded as shown below. Determine the internal force in members AC and AB.

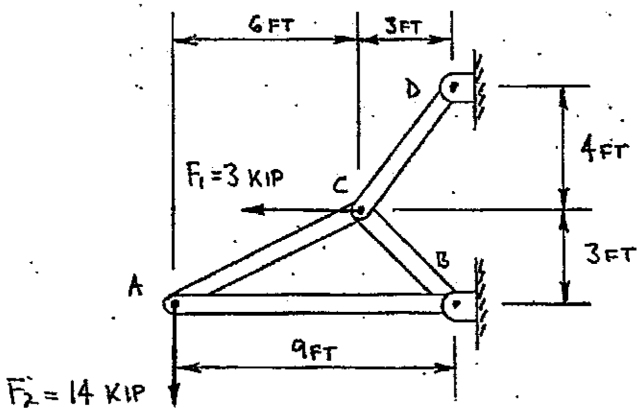

12.2 A truss is loaded as shown below. Determine the internal axial force in members ED, DC and AC.

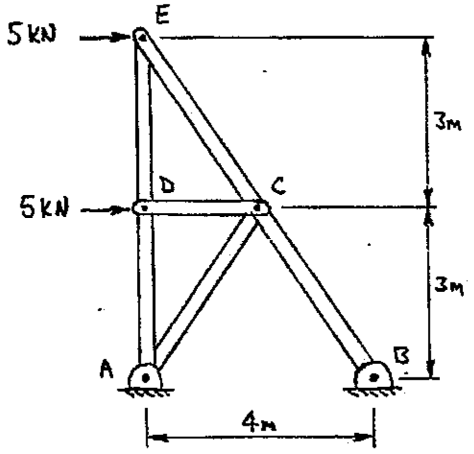

12.3 A truss is loaded as shown below, and the calculated support reactions are applied at pins A and H. Determine the internal axial force in members DG and DE.

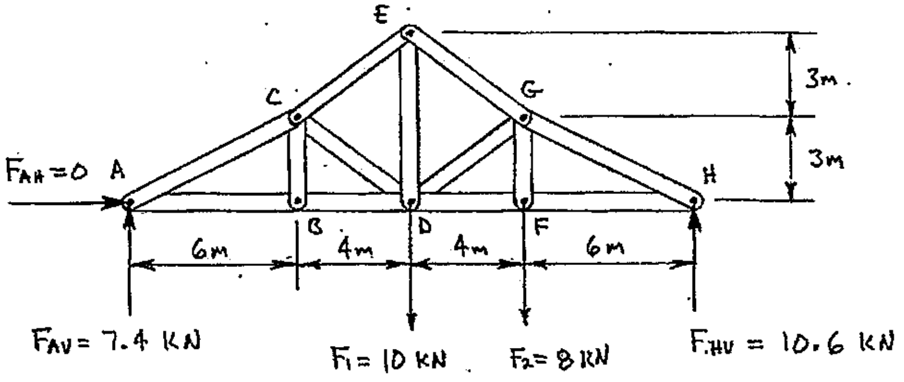

PRACTICE PROBLEMS

12.4 A truss is loaded as shown below. Determine the internal force in members AB, BC and CD.

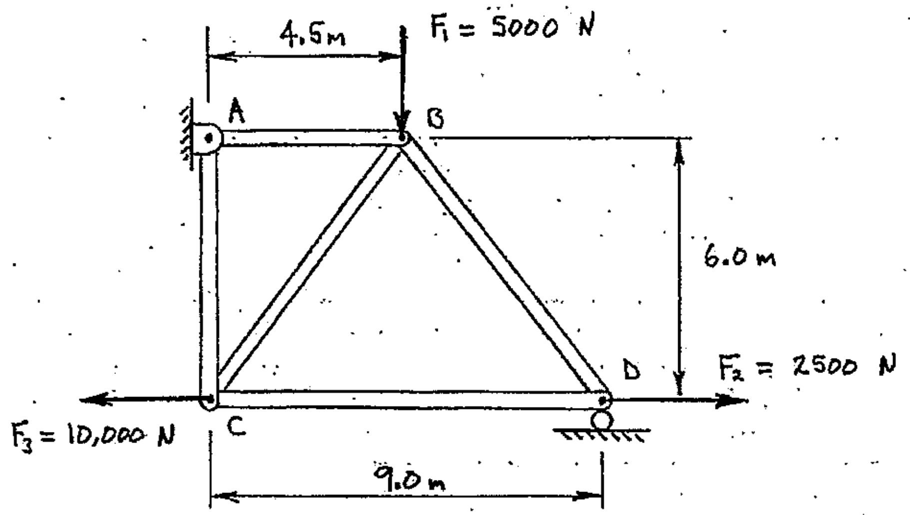

12.5 A truss is loaded as shown below. Determine the internal force in members AB and DE.

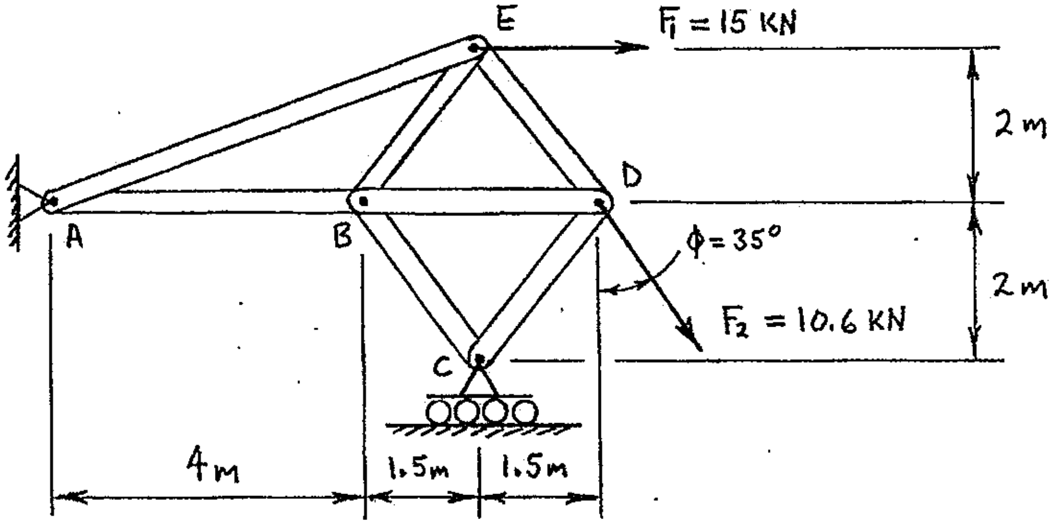

PRACTICE PROBLEMS

12.6 A truss is loaded as shown below. Determine the internal axial force in members CE and DE.

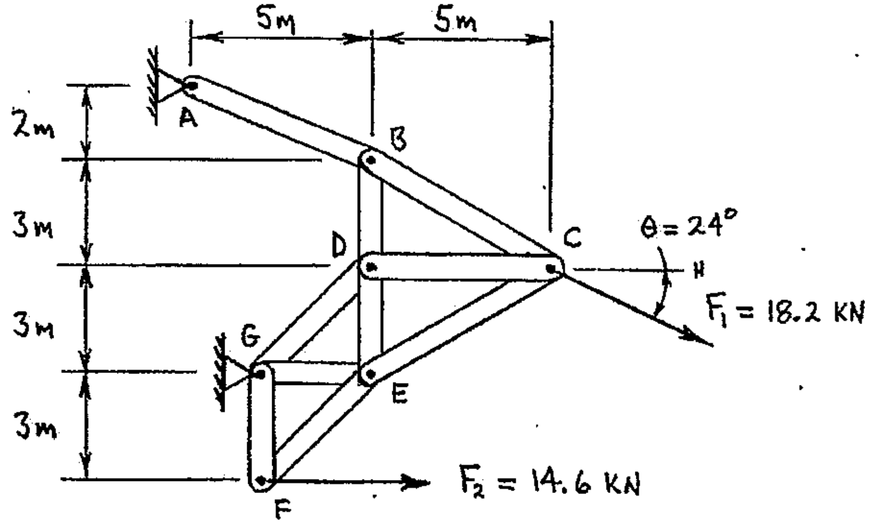

12.7 A truss is loaded as shown below. The calculated support reactions are: $F_{CH} = 0$, $F_{CV} = 625.25$-lb and $F_E = 1338.75$-lb. Forces F_1 and F_2 are applied to the truss via cables that attach at joints A and B (for F_1) and joints F and G (for F_2). Determine the internal force in members AL, DI and DE.

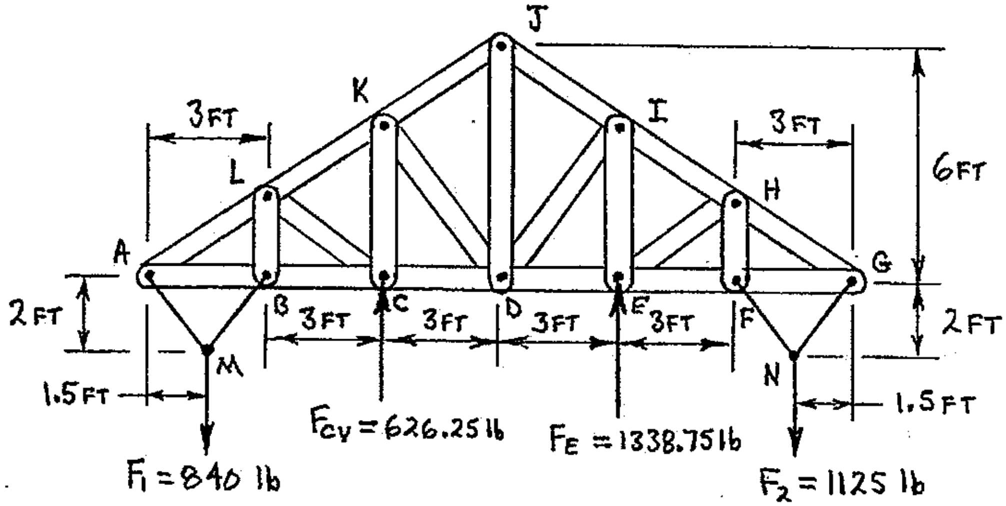

PRACTICE PROBLEMS

12.8 A truss is loaded as shown below. Determine the internal axial force in member CF.

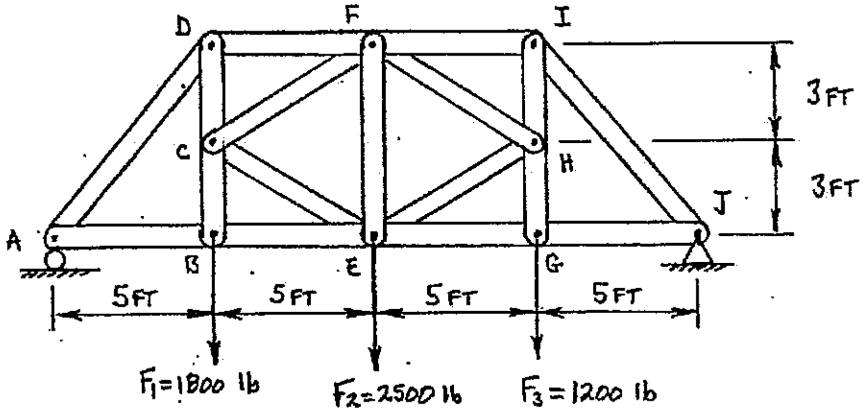

12.9 A truss is loaded as shown below. Determine the internal axial force in member HF.

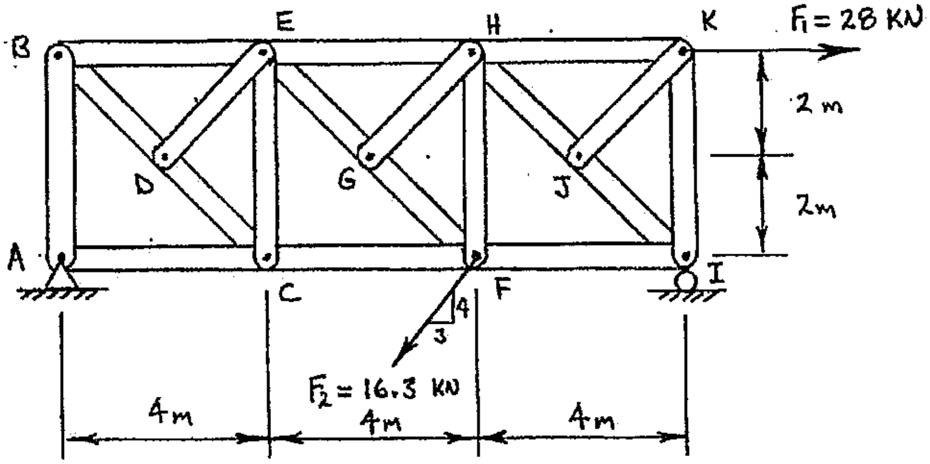

12.10 A truss is loaded as shown below. Determine the internal axial force in member GE.

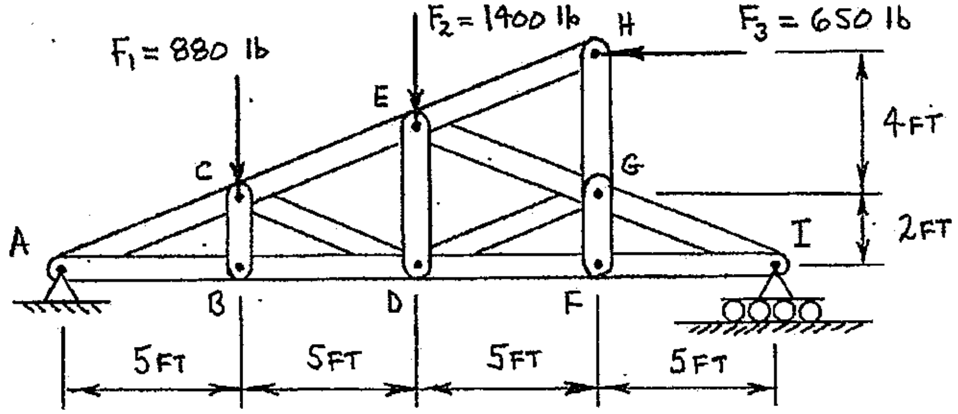

This page intentionally left blank.

CHAPTER 13: INTERNAL REACTIONS IN STRUCTURAL MEMBERS

INTRODUCTION

Internal loads (internal reactions) in structural members represent the internal reactions to externally applied loads.

All *truss* members by definition are assumed to be straight two-force members. So, the internal axial force in a truss member (the force being transferred through the member) is the sole internal reaction that develops at a "cutting plane" that is perpendicular to the member's longitudinal axis.

Multi-force structural members include any members that have loads applied at three or more locations. The beam shown in Figure 13-1 (left side) is a multi-force member, as are all the members of the frame shown on the right side of Figure 13-1.

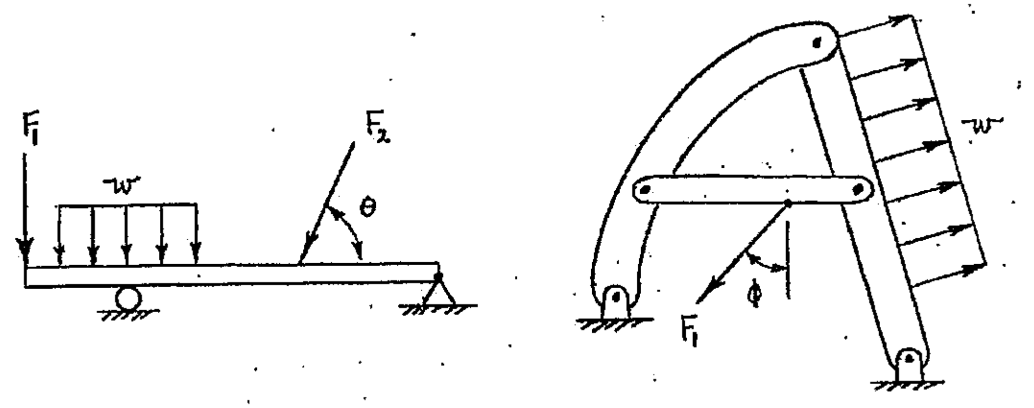

FIGURE 13-1 Various types of multi-force members

The internal reactions (internal loads) within multi-force members can, and usually will, vary in both magnitude and mode depending on where the internal loads are to be evaluated. For the beam shown below (Figure 13-2) the internal reactions (internal loads) at locations B and C will NOT be the same.

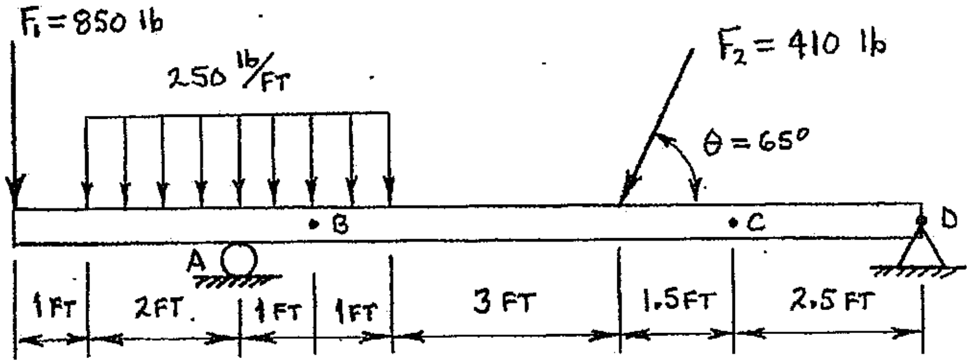

FIGURE 13-2 Horizontal beam loaded as shown.

ASSUMPTIONS USED FOR INTERNAL REACTIONS IN MULTI-FORCE STRUCTURAL MEMBERS

Certain assumptions will be used throughout this chapter. These assumptions may (and probably will) be relaxed in subsequent courses as you develop knowledge beyond the scope of this material.

To determine the internal reactions in a structural member it will be necessary to partition the member into two sections by passing a cutting plane through the member at some specific location (say location B, on the beam shown in Figure 13-2, preceding page, and Figure 13-3 below). The first assumption is that the cutting plane will be perpendicular to the longitudinal axis of the member, as shown in Figure 13-3.

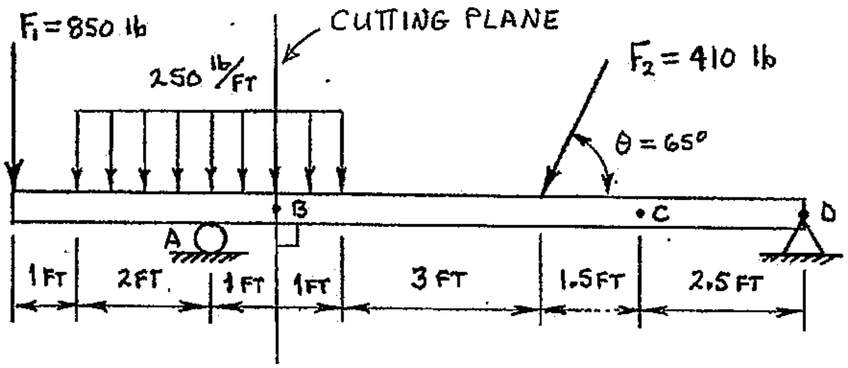

FIGURE 13-3 Horizontal beam with cutting plane at location B

Another assumption is that the structural members are straight, and have a constant uniform cross-section that is symmetric about both transverse axes. Typical reference axes are shown in Figure 13-4. The X-axis is the longitudinal axis. The transverse axes are labeled as Y and Z on the cross-section of the beam defined by the cutting plane. For the symmetric cross-sections assumed here, the transverse axes will always intersect at the centroid of the cross section since the centroid of an area must lie ON an axis of symmetry.

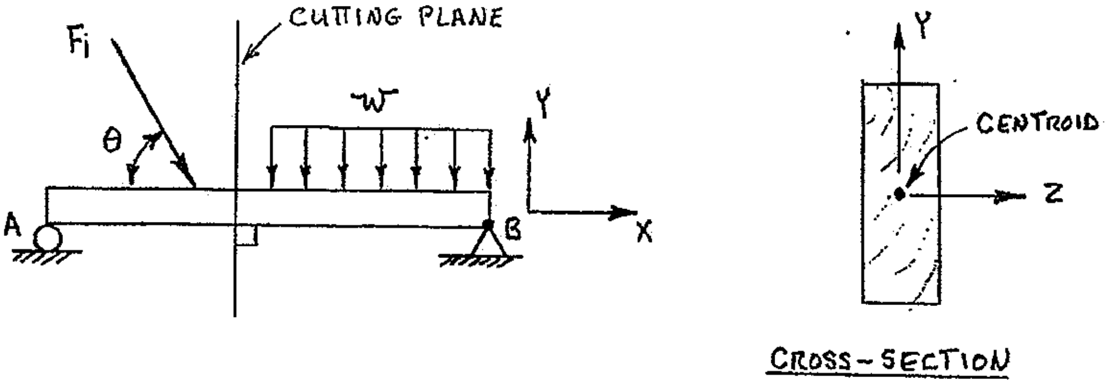

FIGURE 13-4 Beam with reference axes as shown

Figure 13-5 shows the cross-sections of some common structural members (I-beams, solid and hollow rectangular sections, pipe sections) that are symmetric with respect to both of their transverse axes.

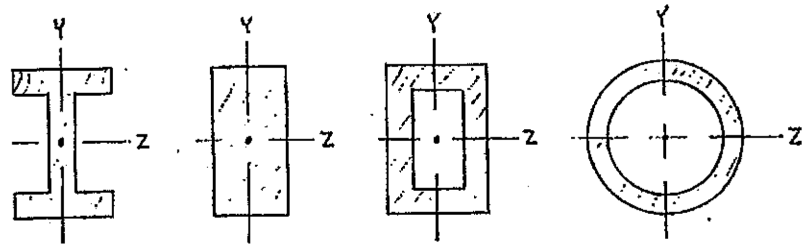

FIGURE 13-5 Cross-sections symmetric about both transverse axes.

The last assumptions concern how loads will be applied to structural members in this chapter. All forces (concentrated forces and distributed loads) applied to a structural member must be applied in the X-Y plane, as shown in Figure 13-6. Couples may be applied at any location along the member, but must also be applied in the X-Y plane (a couple's tendency for rotation must be with respect to a Z-axis). For equilibrium calculations, it is also assumed that all loads (acting loads and reactions, internal and external) are applied at the beam's centerline (the X-axis) regardless of how the loads are shown on the GIVEN diagram or on free body diagrams (see page 10-7, and Figure 10-11).

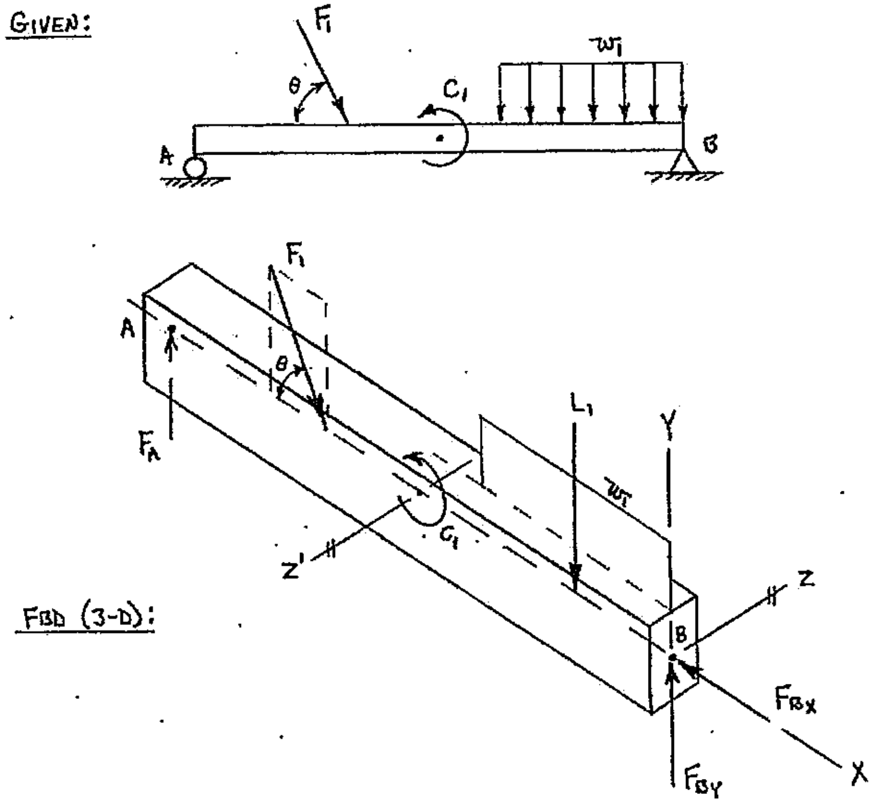

FIGURE 13-6 Assumptions for loadings applied to structural members

Types of Internal Reactions (Internal Loads)

Axial loads, shearing loads, bending loads and torsional loads are some common types of internal reactions (internal loads) that develop in externally loaded multi-force structural members. These internal loads can be "seen" and modeled only after a structural member has been partitioned into two sections via a cutting plane that is perpendicular to the member's longitudinal axis. The internal reactions are modeled on the cross-section created by the cutting plane.

An internal axial load is called either the axial force, or the normal force. The term normal force refers to the line of action for internal axial loads, which is perpendicular to the cutting plane. The symbol for internal axial force is a capital P, and its mode will be either tension or compression.

Internal shearing load is typically called the shear force, and is given the symbol capital V. The line of action for the internal shearing load is always perpendicular to the internal axial load. The mode of the internal shear force is described as either positive or negative.

Internal bending load (normally just called the bending moment) is represented by a couple that tends to rotate about a Z-axis. The internal bending moment is normally given the symbol capital M, and its mode is described as either positive or negative.

An internal torsional load (normally called internal torque) is a couple that tends to rotate about the longitudinal axis of a structural member (the torque twists the member about the X-axis). We will not evaluate any loadings where an external torque is applied about the longitudinal axis of a structural member. Also, since the assumption is that all externally applied forces are applied in the X-Y plane, there will be no internal torsion from a force that was applied "off center". So, internal torque will not be present in structural members based on the assumptions used for this chapter.

The symbols for internal normal/axial force (P), shear force (V) and bending moment (M) will normally carry a subscript that indicates the specific location where internal loads are being evaluated. If the internal reactions were to be determined at location B on the beam shown in Figure 13-3 (page 13-2), then the symbols used to describe the internal reactions would be P_B, V_B and M_B.

Developing Internal Axial Force, Shear Force and Bending Moment

The *method of sections* will be used to determine the internal reactions at a specific location along a structural member. A cutting plane (perpendicular to the member's longitudinal axis) will be used to partition the beam into two sections. A free body diagram will be constructed for ONE of the sections, and the internal reactions will be modeled at/on the cross-section established by the cutting plane. Equilibrium equations

will then be developed and solved to determine the magnitude and mode for each of the internal reactions.

SIGN CONVENTION OF INTERNAL REACTIONS

The **DESIGNER'S SIGN CONVENTION** is a system that was established so that designers working in different locations (different towns, states or countries) all use a consistent and recognized sign convention for internal reactions (internal loads). The Designer's Sign Convention describes positive and negative modes for the internal axial force, the internal shear force and the internal bending moment. However, **POSITIVE** modes must always be assumed for unknown internal reactions when constructing free body diagrams.

THE DESIGNER'S SIGN CONVENTION:

For Internal Axial (Normal) Forces:	
***POSITIVE* Axial Force**	***NEGATIVE* Axial Force**
Tension = Positive	Compression = Negative
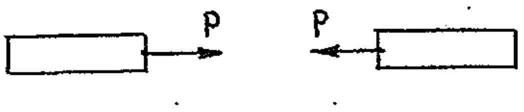	
For Internal Shear Forces:	
***POSITIVE* Shear Force**	***NEGATIVE* Shear Force**
Positive shear force tens to produce clockwise rotation about the opposite end of the section.	Negative shear force tends to produce counterclockwise rotation about the opposite end of the section.
For Internal Bending Moments:	
***POSITIVE* Bending Moment**	***NEGATIVE* Bending Moment**
Positive bending moment tends to compress the top fibers of the section.	Negative bending moment tends to stretch the top fibers of the section.
	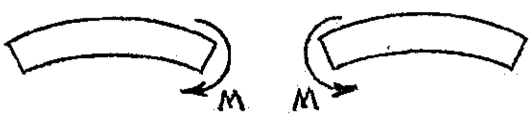

If unknown internal reactions are always assumed as POSITIVE when constructing free body diagrams, then the signs (+ or -) returned from the equilibrium solutions will relate directly to the correct mode described in the Designer's Sign Convention. Note that the Designer's sign Convention is used twice in each solution; first to establish positive (+) mode for the unknown internal reactions shown on the FBD, and then second to determine the resulting modes of the final answers for the internal reactions.

PROCEDURE FOR DETERMINING INTERNAL REACTIONS USING THE METHOD OF SECTIONS

The following is a general solution procedure that can be used to determine the internal reactions in a structural member at a specific location. This procedure is based on the method of sections, uses the Designer's Sign Convention, and can be applied to any structural member, regardless of orientation.

A) Construct an initial diagram of the entire structural member (this is typically your GIVEN diagram).
B) Identify the specific location on the structural member where internal reactions are to be determined. The location is typically identified with/by a letter on the diagram from part A.
C) Sketch a cutting plane, perpendicular to the member's longitudinal axis, at each location where internal reactions are to be determined (sketch the cutting planes on the diagram from part A above)
D) Determine if the support reactions are required. If required, solve for the support reactions.
   1. Construct a FBD of the entire member.
   2. Perform an equilibrium analysis (mentally).
   3. Develop and solve the appropriate equilibrium equations.
E) Construct a FBD of ONE of the sections.
   1. Show the cut perpendicular to the longitudinal axis of the member.
   2. Model the internal axial force (P) in the member as **POSITIVE**, based on the Designer's Sign Convention (positive = tension). The line of action of the internal axial force is shown perpendicular to the cut, and the force is pulling on the cut.
   3. Model the internal shear force as **POSITIVE**, based on the Designer's Sign Convention (positive shear force tends to produce clockwise rotation about the opposite end of the section). The line of action of the internal shear force is shown parallel to the cut.
   4. Model the internal bending moment as **POSITIVE**, based on the Designer's Sign Convention (positive bending moment tends to compress the section's top fibers). The internal bending moment is modeled as a couple acting about a Z-axis that lies on the cut.
   5. Include all forces, couples, and external reactions that appear on the chosen section.
F) Perform an equilibrium analysis (mentally) of the chosen section's FBD.
G) Apply static equilibrium; develop and solve the appropriate equilibrium equations. Apply the Designer's Sign Convention to determine the proper mode for each internal reaction based on the sign (+ or -) shown with the numeric answer.
H) Properly report the final answer(s):

   P_A = magnitude (with units) and mode
   V_A = magnitude (with units) and mode
   M_A = magnitude (with units) and mode
   (where the subscript "A" refers to a specific location)

Example 13-1 Determine the internal axial force, internal shear force and internal bending moment at locations B and C for the beam loaded as shown below.

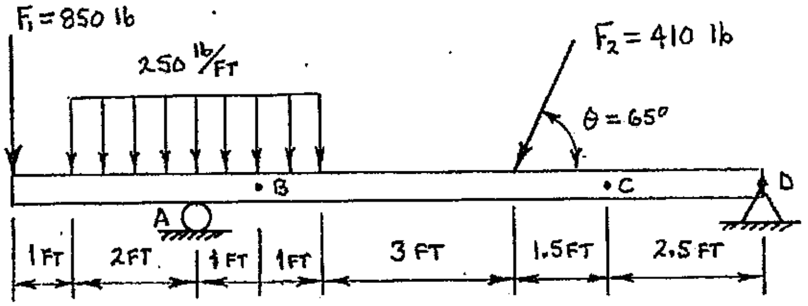

Part 1) Internal reactions at location B

The beam shown above will be partitioned (cut) into two sections (left and right) by passing a cutting plane through location B. Once cut, the support reaction at A would be required if using the left section and the support reactions at D would be required if using the right section. So, a free body diagram of the entire beam will be constructed and used to find the support reactions at A and D.

<u>FBD OF ENTIRE BEAM</u>:

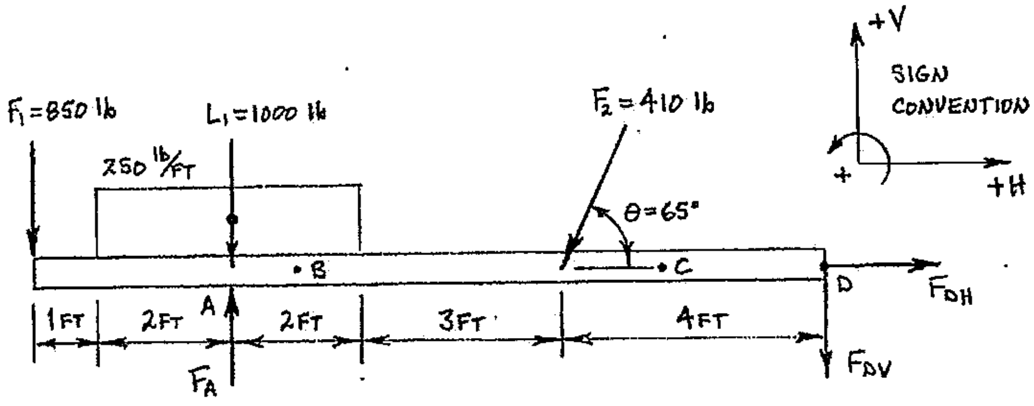

Detemine the horizontal reaction at D:

$$\Sigma F_H = 0$$

$$0 = \pm F_{2H} \pm F_{DH}$$

$$0 = -(F_2)(\cos 65^0) + F_{DH}$$

$$F_{DH} = +(F_2)(\cos 65^0)$$

$$F_{DH} = +(410\text{ lb})(\cos 65^0)$$

$$F_{DH} = +173.273\text{ lb}$$

$$F_{DH} = \underline{\underline{173.273\text{ lb} \;\rightarrow}}$$

<u>cont'd.</u>

Example 13-1: (cont'd.)

Determine the vertical reaction at D:

$$\Sigma M_A = 0$$

$$0 = \pm[(F_1)(d_\perp)] \pm [(F_{2V})(d_\perp)] \pm [(F_{DV})(d_\perp)]$$

$$0 = +[(F_1)(3\text{ ft})] - [(F_2)(\sin 65^0)(5\text{ ft})] - [(F_{DV})(9\text{ ft})]$$

$$F_{DV} = \frac{+[(F_1)(3\text{ ft})] - [(F_2)(\sin 65^0)(5\text{ ft})]}{9\text{ ft}}$$

$$F_{DV} = \frac{+[(850\text{ lb})(3\text{ ft})] - [(410\text{ lb})(\sin 65^0)(5\text{ ft})]}{9\text{ ft}}$$

$$F_{DV} = +76.8966\text{ lb}$$

$$F_{DV} = \underline{\underline{76.8966\text{ lb} \;\downarrow}}$$

Determine the vertical reaction at A:

$$\Sigma M_D = 0$$

$$0 = \pm[(F_1)(d_\perp)] \pm [(L_1)(d_\perp)] \pm [(F_A)(d_\perp)] \pm [(F_{2V})(d_\perp)]$$

$$0 = +[(F_1)(12\text{ ft})] + [(L_1)(9\text{ ft})] - [(F_A)(9\text{ ft})] + [(F_2)(\sin 65^0)(4\text{ ft})]$$

$$F_A = \frac{+[(F_1)(12\text{ ft})] + [(L_1)(9\text{ ft})] + [(F_2)(\sin 65^0)(4\text{ ft})]}{9\text{ ft}}$$

$$F_A = \frac{+[(850\text{ lb})(12\text{ ft})] + [(1000\text{ lb})(9\text{ ft})] + [(410\text{ lb})(\sin 65^0)(4\text{ ft})]}{9\text{ ft}}$$

$$F_A = +2298.48\text{ lb}$$

$$F_A = \underline{\underline{2298.48\text{ lb} \;\uparrow}}$$

Verify the support reactions:

$$\Sigma F_V = 0$$

$$0 = \pm F_1 \pm L_1 \pm F_A \pm F_{2V} \pm F_{DV}$$

$$0 = -F_1 - L_1 + F_A - F_2(\sin 65^0) - F_{DV}$$

$$0 = -850\text{ lb} - 1000\text{ lb} + (+2298.48\text{ lb}) - (410\text{ lb})(\sin 65^0) - (+76.8966\text{ lb})$$

$$\underline{\underline{0 = 0}}$$

(Calculated support reactions are OK)

cont'd.

Example 13-1: (cont'd.)

The original beam will now be partitioned (cut) at location B. Partial free body diagrams of both the left and the right sections are shown below, and all unknown internal reactions have been constructed with positive sense (according to the Designer's Sign Convention). Notice that the shear force (V_B) has been shown slightly off of (but parallel to) the cut for clarity only, the actual shear force acts <u>ON</u> the cut. Also notice that if the diagrams for the left and right sections were combined, all of the internal reactions at location B would sum to zero. Internal reactions are only shown if and when a section is "cut" from a structural member; the internal reactions are then required to keep the member in static equilibrium.

<u>PARTIAL FBDS OF BOTH THE LEFT AND RIGHT SECTIONS</u>:

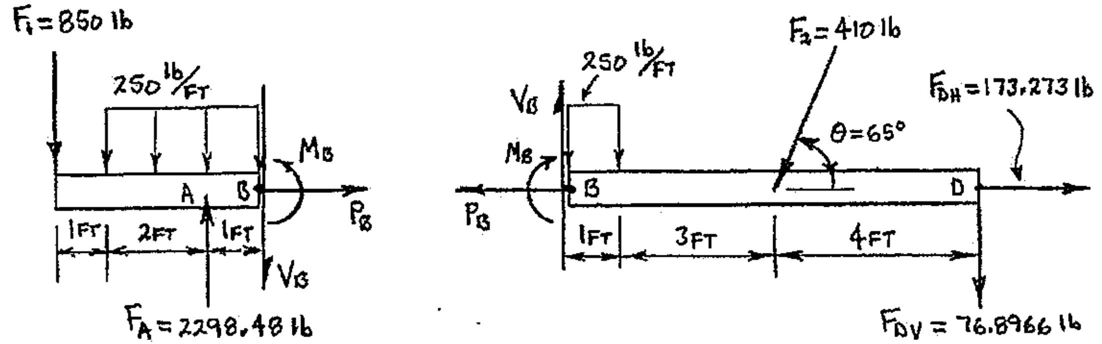

A free body diagram of only one of the sections (left or right) is required when using the method of sections to determine the internal reactions at a specific location. A complete free body diagram of the left section is shown below, and will be used to develop the equilibrium solutions for the internal reactions at location B.

<u>FBD OF THE LEFT SECTION</u>: (cut at location B)

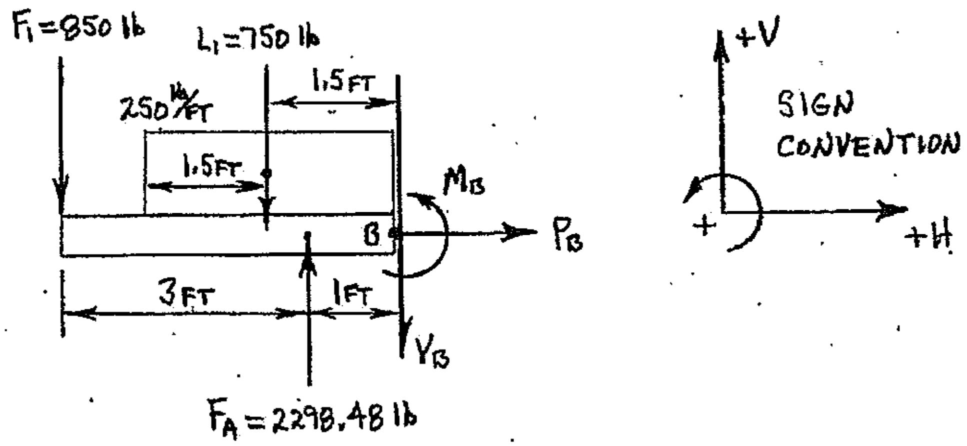

<u>cont'd.</u>

Example 13-1: (cont'd.)

Force equilibrium equations ($\Sigma F_H = 0$ and $\Sigma F_V = 0$) will be used to determine the internal axial force and the internal shear force. To determine the internal bending moment, ALWAYS apply moment equilibrium with respect to the cut end (with respect to the point that the cutting plane passed through the member).

Determine the internal axial force, P_B: (using the FBD of the left section)

$$\Sigma F_H = 0$$
$$0 = \pm P_B$$
$$P_B = \underline{\underline{0}}$$ (There is zero internal axial force at location B)

Determine the internal shear force, V_B: (using the FBD of the left section)

$$\Sigma F_V = 0$$
$$0 = \pm F_1 \pm L_1 \pm F_A \pm V_B$$
$$0 = -F_1 - L_1 + F_A - V_B$$
$$V_B = -F_1 - L_1 + F_A$$
$$V_B = -850\text{ lb} - 750\text{ lb} + 2298.48\text{ lb}$$

INDICATES AGREEMENT WITH POSITIVE MODE ASSUMED AND SHOWN ON FBD

$$V_B = +698.480\text{ lb}$$
$$V_B = \underline{\underline{698.480\text{ lb} \quad (\text{positive})}}$$

Determine the internal bending moment, M_B: (using the FBD of the left section)

$$\Sigma M_B = 0$$
$$0 = \pm[(F_1)(d_\perp)] \pm [(L_1)(d_\perp)] \pm [(F_A)(d_\perp)] \pm M_B$$
$$0 = +[(F_1)(4\text{ ft})] + [(L_1)(1.5\text{ ft})] - [(F_A)(1\text{ ft})] + M_B$$
$$M_B = -[(F_1)(4\text{ ft})] - [(L_1)(1.5\text{ ft})] + [(F_A)(1\text{ ft})]$$
$$M_B = -[(850\text{ lb})(4\text{ ft})] - [(750\text{ lb})(1.5\text{ ft})] + [(2298.48\text{ lb})(1\text{ ft})]$$

INDICATES DISAGREEMENT WITH POSITIVE MODE ASSUMED AND SHOWN ON FBD

$$M_B = -2226.52\text{ lb-ft}$$
$$M_B = \underline{\underline{2226.52\text{ lb-ft} \quad (\text{negative})}}$$

cont'd.

Example 13-1: (cont'd.)

The internal reactions at location B could also be found using a free body diagram of the right section (shown below). A solution using the FBD of the right section follows, and in practice is a good way to check the internal reactions found using the FBD of the left section.

FBD OF THE RIGHT SECTION: (cut at location B)

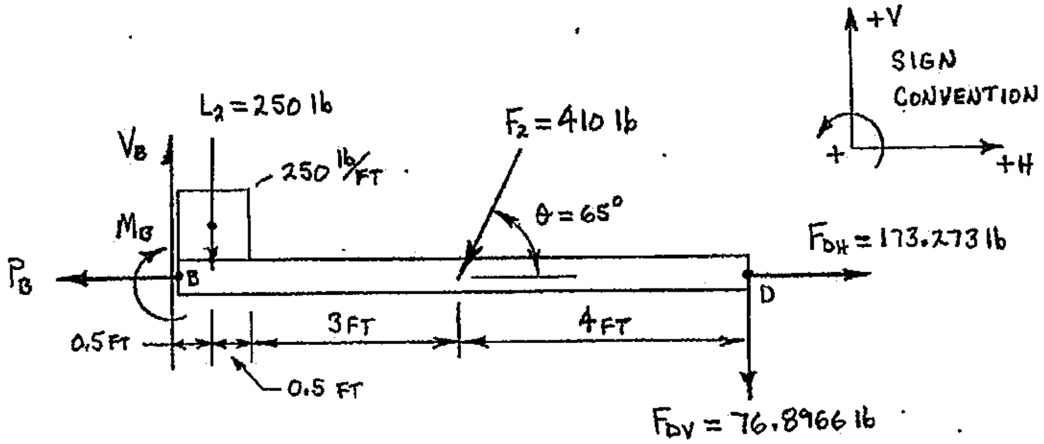

Determine the internal axial force, P_B: (using the FBD of the right section)

$$\Sigma F_H = 0$$
$$0 = \pm P_B \pm F_{2H} \pm F_{DH}$$
$$0 = -P_B - F_2\left(\cos 65^0\right) + F_{DH}$$
$$P_B = -F_2\left(\cos 65^0\right) + F_{DH}$$
$$P_B = -(410\text{ lb})\left(\cos 65^0\right) + 173.273\text{ lb}$$
$$P_B = \underline{\underline{0}}$$ (same as answer shown on previous page)

Determine the internal shear force, V_B: (using the FBD of the right section)

$$\Sigma F_V = 0$$
$$0 = \pm V_B \pm L_2 \pm F_{2V} \pm F_{DV}$$
$$0 = +V_B - L_2 - F_2\left(\sin 65^0\right) - F_{DV}$$
$$V_B = +L_2 + F_2\left(\sin 65^0\right) + F_{DV}$$
$$V_B = +250\text{ lb} + (410\text{ lb})\left(\sin 65^0\right) + 76.8966\text{ lb}$$
$$V_B = +698.483\text{ lb}$$
$$V_B = \underline{\underline{698.483\text{ lb (positive)}}}$$ ⇒ same as answer shown on previous page

Example 13-1: (cont'd.)

Determine the internal bending moment, M_B: (using the FBD of the right section)

$$\Sigma M_B = 0$$
$$0 = \pm M_B \pm [(L_2)(d_\perp)] \pm [(F_{2V})(d_\perp)] \pm [(F_{DV})(d_\perp)]$$
$$0 = -M_B - [(L_2)(0.5\text{ ft})] - [(F_2)(\sin 65^\circ)(4\text{ ft})] - [(F_{DV})(8\text{ ft})]$$
$$M_B = -[(L_2)(0.5\text{ ft})] - [(F_2)(\sin 65^\circ)(4\text{ ft})] - [(F_{DV})(8\text{ ft})]$$
$$M_B = -[(250\text{ lb})(0.5\text{ ft})] - [(410\text{ lb})(\sin 65^\circ)(4\text{ ft})] - [(76.8966\text{ lb})(8\text{ ft})]$$
$$M_B = -2226.52\text{ lb-ft}$$
$$M_B = \underline{\underline{2226.52\text{ lb-ft (negative)}}}$$ ⇒ same as answer from page 13-10

Part 2) Internal reactions at location C

The beam shown at the top of page 13-7 (the original beam) will now be partitioned by a cutting plane that passes through location C. Since only one of the sections (left or right) will be required to solve for the internal reactions at location C, a reasonable practice would be to use the section that leads to the most efficient solution. Using the right section allows the construction of the FBD shown below. The FBD of the right section includes only the external reactions at pin D, and the internal reactions (internal loads) at location C. The Designer's Sign Convention will again be used to establish positive mode for each of the unknown internal reactions shown on the FBD.

<u>FBD OF THE RIGHT SECTION</u>: (cut at location C)

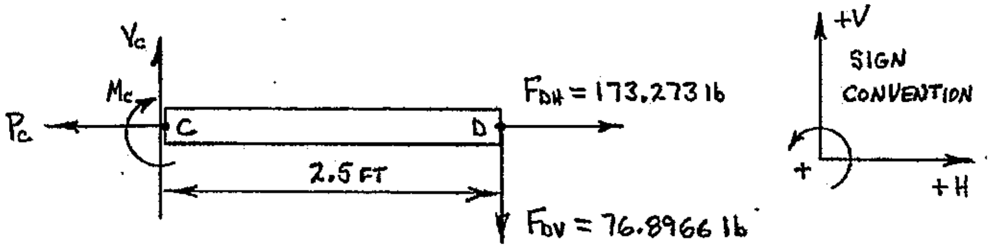

Determine the internal axial force, P_C: (using the FBD of the right section)

$$\Sigma F_H = 0$$
$$0 = \pm P_C \pm F_{DH}$$
$$0 = -P_C + F_{DH}$$
$$P_C = +F_{DH}$$

<u>cont'd.</u>

Example 13-1: (cont'd.)

$$P_C = +F_{DH}$$

$$P_C = +173.273 \text{ lb}$$

INDICATES AGREEMENT WITH POSITIVE MODE ASSUMED AND SHOWN ON FBD

$$P_C = \underline{\underline{173.273 \text{ lb} \quad (\text{tension})}}$$

Determine the internal shear force, V_C: (using the FBD of the right section)

$$\Sigma F_V = 0$$

$$0 = \pm V_C \pm F_{DV}$$

$$0 = +V_C - F_{DV}$$

$$V_C = +F_{DV}$$

$$V_C = +76.8966 \text{ lb}$$

INDICATES AGREEMENT WITH POSITIVE MODE ASSUMED AND SHOWN ON FBD

$$V_C = \underline{\underline{76.8966 \text{ lb} \quad (\text{positive})}}$$

Determine the internal bending moment, M_C: (using the FBD of the right section)

$$\Sigma M_C = 0$$

$$0 = \pm M_C \pm \left[(F_{DV})(d_\perp)\right]$$

$$0 = -M_C - \left[(F_{DV})(2.5 \text{ ft})\right]$$

$$M_C = -\left[(F_{DV})(2.5 \text{ ft})\right]$$

$$M_C = -\left[(76.8966 \text{ lb})(2.5 \text{ ft})\right]$$

$$M_C = -192.242 \text{ lb-ft}$$

INDICATES DISAGREEMENT WITH POSITIVE MODE ASSUMED AND SHOWN ON FBD

$$M_C = \underline{\underline{192.242 \text{ lb-ft} \quad (\text{negative})}}$$

ANSWER:	
At location B:	At location C:
$P_B = 0$	$P_C = 173.3$ lb (tension)
$V_B = 698.5$ lb (positive)	$V_C = 76.90$ lb (positive)
$M_B = 2227$ lb-ft (negative)	$M_C = 192.2$ lb-ft (negative)

A cantilever beam is shown in Figure 13-7. The internal reactions at any location along a cantilever beam can normally be found without calculating any external support reactions. If the internal reactions (internal loads) were to be determined at location B (Figure 13-7), then the free body diagram of the left section could (and probably would) be used since the external support reactions are not applied on that section. Thus, the external support reactions would not be required to determine the internal loads at location B for the cantilever beam shown in Figure 13-7 when working from a FBD of the left section.

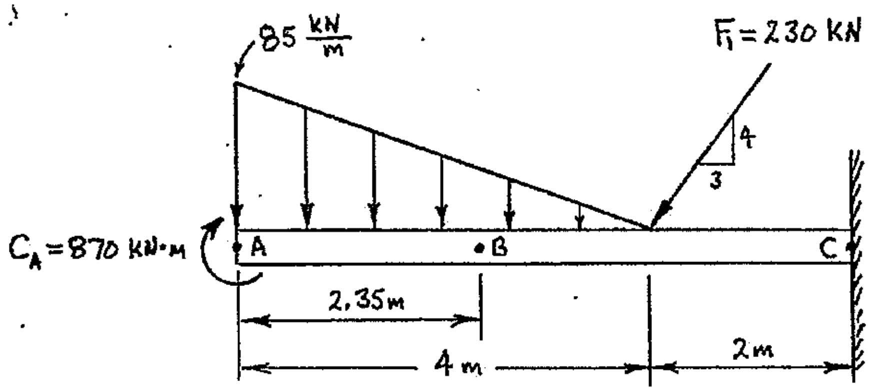

FIGURE 13-7 Cantilever beam loaded as shown.

Example 13-2: A cantilever beam is loaded as shown below. Determine the internal reactions (axial force, shear force and bending moment) at location B.

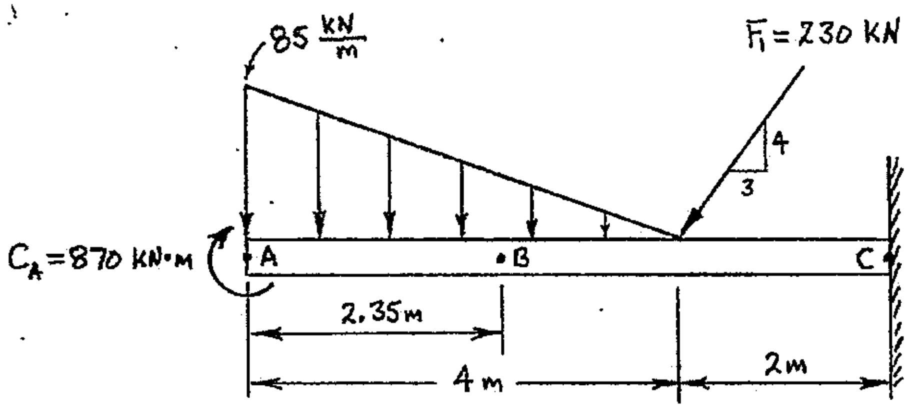

A cutting plane (perpendicular to the beam's longitudinal axis) is passed through the beam at location B to establish left and right sections. Normally this would be done/shown on the GIVEN diagram above; however, for this problem the GIVEN diagram is repeated at the top of the following page. If a free body diagram of the left section is used to determine the internal reactions at B, then the external support reactions at C will not be required.

cont'd.

Example 13-2: (cont'd.)

GIVEN DIAGRAM: (repeated here for clarity)

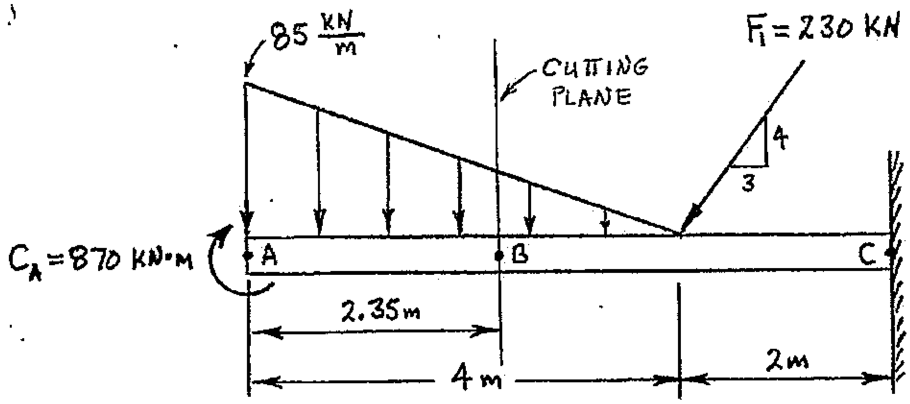

The magnitude of the distributed load at location B will be required for this solution, and must be calculated so that the magnitude can be shown on the FBD of the left section (and used in the solution). A diagram of just the distributed load is shown below, and similar triangles can be employed to solve for the required magnitude of the distributed load at location B. The small triangle with height of h and base of x_2 is similar to the larger triangle (with height of 85 kN/m and base of 4-m) that represents the entire load.

WORKING DIAGRAM #1: (distributed load only)

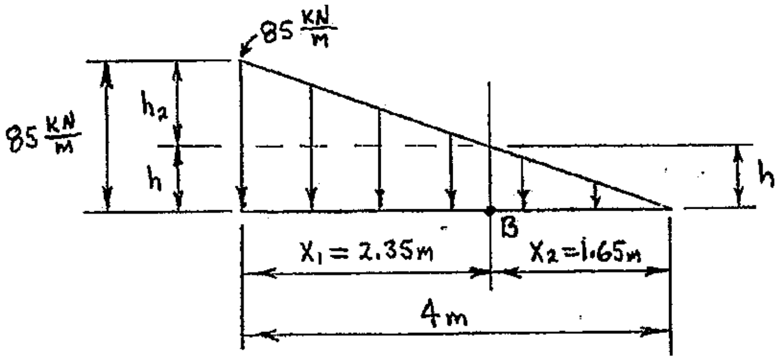

From similar triangles:

$$\frac{h}{x_2} = \frac{85\,\frac{\text{kN}}{\text{m}}}{4\,\text{m}}$$

$$h = \left(\frac{85\,\frac{\text{kN}}{\text{m}}}{4\,\text{m}}\right)(x_2) = \left(\frac{85\,\frac{\text{kN}}{\text{m}}}{4\,\text{m}}\right)(1.65\,\text{m}) = \underline{\underline{35.0625\,\frac{\text{kN}}{\text{m}}}}$$

cont'd.

Example 13-2: (cont'd.)

A free body diagram for the left section can now be constructed, as shown below. Remember, all unknown internal loads are shown with POSITIVE mode based on the Designer's Sign Convention.

FBD OF THE LEFT SECTION: (cut at location B)

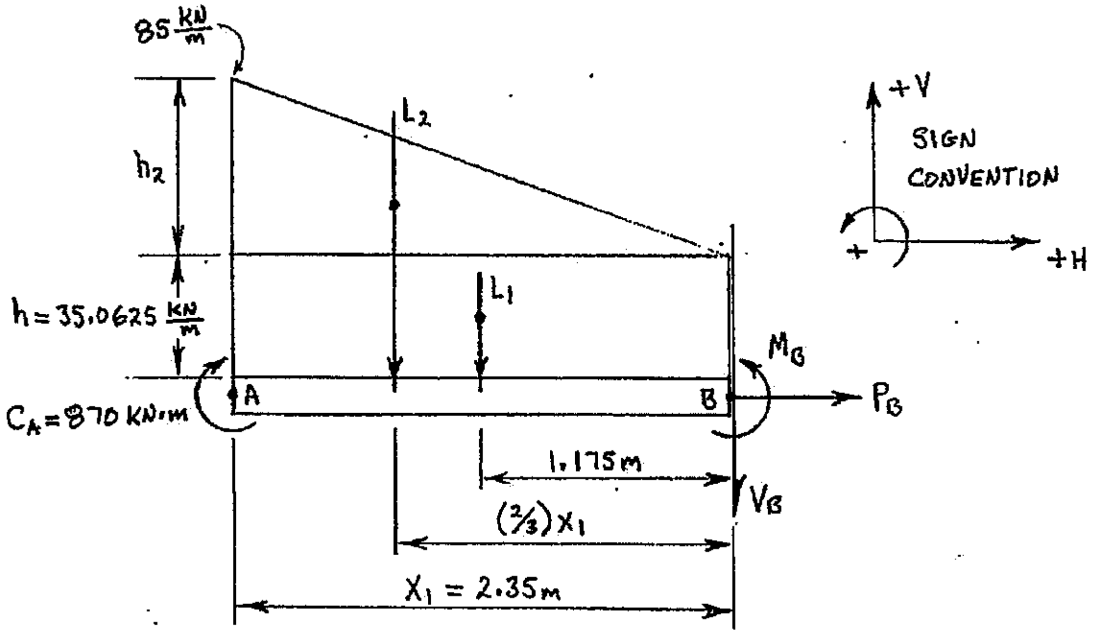

The concentrated effects, L_1 and L_2, can be found as shown below:

$$L_1 = (x_1)h$$

$$L_1 = (2.35\text{ m})\left(35.0625\frac{\text{kN}}{\text{m}}\right)$$

$$L_1 = \underline{\underline{82.3969\text{ kN}}}\ \downarrow$$

$$L_2 = \frac{1}{2}(x_1)(h_2) \qquad \underline{\text{Where:}}\ \ h_2 = 85\frac{\text{kN}}{\text{m}} - h$$

$$L_2 = \left(\frac{1}{2}\right)(2.35\text{ m})\left(85\frac{\text{kN}}{\text{m}} - 35.0625\frac{\text{kN}}{\text{m}}\right)$$

$$L_2 = \underline{\underline{58.6766\text{ kN}}}\ \downarrow$$

The internal reactions at location B can now be determined using the appropriate equilibrium equations.

Determine the internal axial force, P_B: (using the FBD of the left section)

$$\Sigma F_H = 0$$

$$0 = \pm P_B$$

$$P_B = \underline{\underline{0}}$$ (there is zero internal axial force at location B)

cont'd.

Example 13-2: (cont'd.)

Determine the internal shear force, V_B: (using the FBD of the left section)

$$\Sigma F_V = 0$$
$$0 = \pm L_2 \pm L_1 \pm V_B$$
$$0 = -L_2 - L_1 - V_B$$
$$V_B = -L_2 - L_1$$
$$V_B = -58.6766\text{ kN} - 82.3969\text{ kN}$$
$$V_B = -141.074\text{ kN}$$
$$V_B = \underline{\underline{141.074\text{ kN}\quad(\text{negative})}}$$

Determine the internal bending moment, M_B: (using the FBD of the left section)

$$\Sigma M_B = 0$$
$$0 = \pm C_A \pm \left[(L_2)(d_\perp)\right] \pm \left[(L_1)(d_\perp)\right] \pm M_B$$
$$0 = -C_A + \left[(L_2)\left(\tfrac{2}{3}\right)(2.35\text{ m})\right] + \left[(L_1)(1.175\text{ m})\right] + M_B$$
$$M_B = +C_A - \left[(L_2)\left(\tfrac{2}{3}\right)(2.35\text{ m})\right] - \left[(L_1)(1.175\text{ m})\right]$$
$$M_B = +870\text{ kN-m} - \left[(58.6766\text{ kN})\left(\tfrac{2}{3}\right)(2.35\text{ m})\right] - \left[(82.3969\text{ kN})(1.175\text{ m})\right]$$
$$M_B = +680.082\text{ kN-m}$$
$$M_B = \underline{\underline{680.082\text{ kN-m}\quad(\text{positive})}}$$

The answers for Example 13-2 are shown below:

<u>ANSWER</u>:

$P_B = 0$

$V_B = 141.1$ kN (negative)

$M_B = 680.1$ kN-m (positive)

STRUCTURAL MEMBERS AT ORIENTATIONS OTHER THAN HORIZONTAL

Although the structural members evaluated in Examples 13-1 and 13-2 were both horizontal beams, the same procedure can be used to determine the internal reactions in structural members *regardless of their orientation*. Consider member CDE of the frame shown in Figure 13-8. The internal reactions (internal loads) at location G could be determined once the pin reactions at C, D and E have been calculated (via methods shown in Chapter 11).

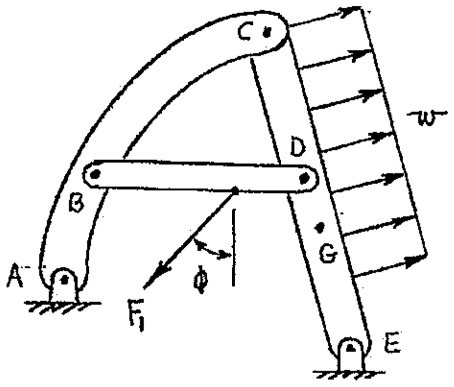

FIGURE 13-8 Frame loaded as shown

Figure 13-9 is a partial free body diagram of the "lower" section of member CDE. The reactions at pin E are known (from prior work), and positive modes for the internal axial force and internal shear force have been established based on the Designer's Sign Convention. However, when using the Designer's Sign Convention to establish a positive mode for the internal bending moment you must first identify which surface of the member is considered to be the "top" surface. Once a top surface has identified, the Designer's Sign Convention can then be used to establish a positive mode.

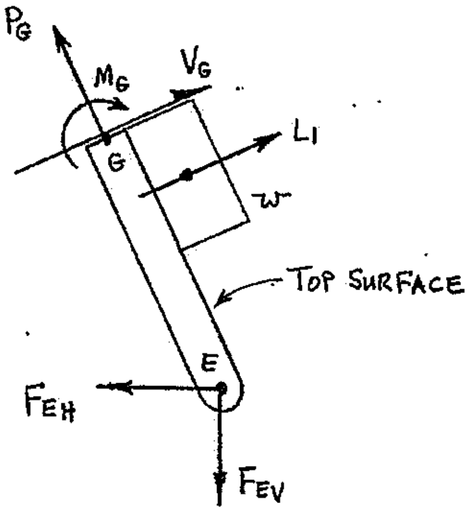

FIGURE 13-9 Partial FBD of the lower section of CDE (cut at location G)

<u>SUMMARY</u>

The method of sections can be used to determine the internal reactions (internal axial force, internal shear force and internal bending moment) at a specific location in a structural member. Certain assumptions were used when determining the internal reactions (internal loads) via the method of sections. All structural members are assumed to be straight, have a uniform cross-section, and are symmetric about both of their transverse axes. All concentrated and distributed loads are applied along the longitudinal centerline of the member so that no twisting (torsion) occurs due to the loading. The cutting plane used to partition the structural members is always constructed perpendicular to the member's longitudinal axis.

The method of sections requires that the structural member be partitioned (cut) at a specific location. A free body diagram can then be constructed for <u>ONE</u> of the sections, with the internal reactions shown acting at/on the cut. The internal reactions are then determined for/at that specific location.

The Designer's Sign Convention is used to establish a positive mode for each of the internal reactions shown on the free body diagram. Equilibrium equations are developed and solved to determine each internal reaction, and then the Designer's Sign Convention is applied a second time to designate the proper mode for each internal reaction based on the sign (+ or -) returned with its numeric answer.

The method of sections can be used to determine the internal axial force, internal shear force and internal bending moment at a specific location in a structural member, *regardless of the orientation of the member.* However, if the member's orientation is <u>not horizontal</u>, a "top" surface must be identified before the Designer's Sign Convention can be used to establish a positive mode for the internal bending moment.

<u>FURTHER EXAMPLE PROBLEMS</u> (solutions in GFSA format begin on page 13-21)

Example 13-3 A cantilever beam is loaded as shown below. Determine the internal reactions (axial force, shear force and bending moment) at location A.

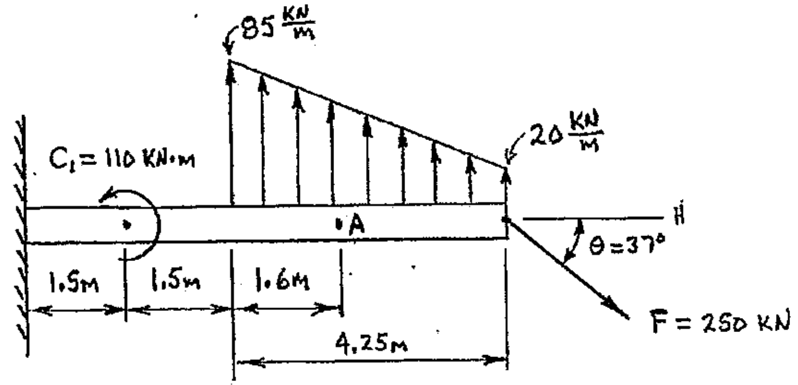

FURTHER EXAMPLE PROBLEMS (solutions in GFSA format are on the following pages)

Example 13-4 A frame is constructed from two members, AB and CD, which are connected with a pin at B. The frame is loaded as shown below. Determine the internal axial force, internal shear force and internal bending moment at location E. Assume that the "top" surface of member CD is the surface farthest from pin A.

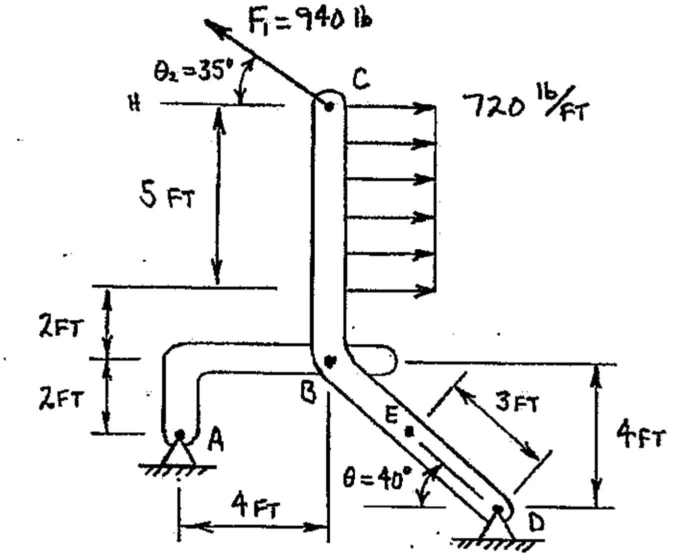

PROBLEM: EXAMPLE 13-3

GIVEN: A CANTILEVER BEAM IS LOADED AS SHOWN BELOW.

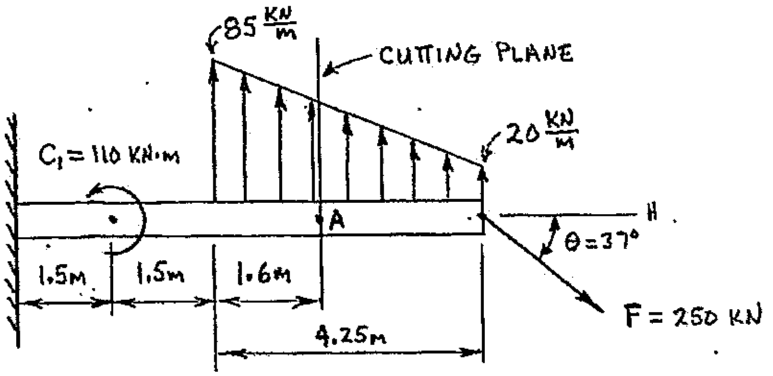

FIND: DETERMINE THE INTERNAL REATIONS (AXIAL FORCE, SHEAR FORCE AND BENDING MOMENT) AT LOCATION A.

SOLUTION:

WORKING DIAGRAM OF LOAD: (TO FIND MAGNITUDE OF DISTRIBUTION @ A)

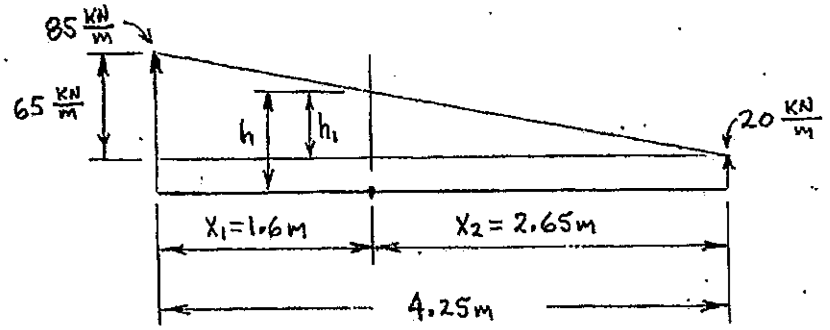

FROM SIMILAR TRIANGLES:

$$\frac{h_1}{X_2} = \frac{65\ \frac{KN}{m}}{4.25m}$$

$$h_1 = \left(\frac{65\ \frac{KN}{m}}{4.25m}\right)X_2$$

$$h_1 = \left(\frac{65\ \frac{KN}{m}}{4.25m}\right)(2.65m)$$

$$h_1 = \underline{40.5294\ \frac{KN}{m}} \qquad \text{So: } h = \underline{60.5294\ \frac{KN}{m}}$$

CONT'D.

PROBLEM: EXAMPLE 13-3 (CONT'D.)

FBD OF RIGHT SECTION: (CUT @ LOCATION A)

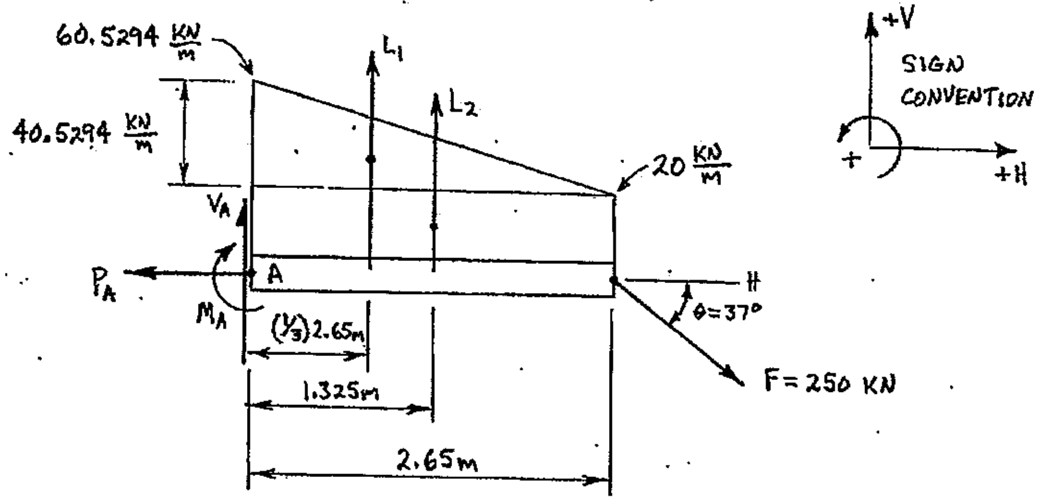

DETERMINE CONCENTRATED EFFECTS, $L_1 + L_2$:

$L_1 = \frac{1}{2}(40.5294 \frac{KN}{m})(2.65m)$

$L_1 = \underline{53.7015 \text{ KN} \uparrow}$

$L_2 = (20 \text{ KN/m})(2.65m)$

$L_2 = \underline{53.00 \text{ KN} \uparrow}$

DETERMINE INTERNAL AXIAL FORCE, P_A:

$\Sigma F_H = 0$

$0 = \pm P_A \pm F_H$

$0 = -P_A + F(\cos 37°)$

$P_A = +F(\cos 37°)$

$P_A = +(250 \text{ KN})(\cos 37°)$

$P_A = +199.659 \text{ KN}$

$P_A = \underline{199.659 \text{ KN (TENSION)}}$

CONT'D.

PROBLEM: EXAMPLE 13-3 (CONT'D.)

DETERMINE INTERNAL SHEAR FORCE, V_A:

$$\Sigma F_V = 0$$

$$0 = \pm V_A \pm L_1 \pm L_2 \pm F_V$$

$$0 = +V_A + L_1 + L_2 - F(\sin 37^\circ)$$

$$V_A = -L_1 - L_2 + F(\sin 37^\circ)$$

$$V_A = -53.7015\ kN - 53\ kN + (250\ kN)(\sin 37^\circ)$$

$$V_A = +43.7523\ kN$$

$$V_A = \underline{43.7523\ kN\ (\text{POSITIVE})}$$

DETERMINE INTERNAL BENDING MOMENT, M_A:

$$\Sigma M_A = 0$$

$$0 = \pm M_A \pm [(L_1)(d\perp)] \pm [(L_2)(d\perp)] \pm [(F_V)(d\perp)]$$

$$0 = -M_A + [(L_1)(1/3)(2.65m)] + [(L_2)(1.325m)] - [(F)(\sin 37^\circ)(2.65m)]$$

$$M_A = +[(L_1)(1/3)(2.65m)] + [(L_2)(1.325m)] - [(F)(\sin 37^\circ)(2.65m)]$$

$$M_A = +[(53.7015\ kN)(1/3)(2.65m)] + [(53\ kN)(1.325m)] - [(250\ kN)(\sin 37^\circ)(2.65m)]$$

$$M_A = -281.041\ kN \cdot m$$

$$M_A = \underline{281.041\ kN \cdot m\ (\text{NEGATIVE})}$$

ANSWER:

$P_A = 199.7\ kN$ (TENSION)

$V_A = 43.75\ kN$ (POSITIVE)

$M_A = 281.0\ kN \cdot m$ (NEGATIVE)

PROBLEM: EXAMPLE 13-4

GIVEN: A FRAME IS CONSTRUCTED FROM TWO MEMBERS, AB AND CD, WHICH ARE CONNECTED WITH A PIN AT B. THE FRAME IS LOADED AS SHOWN BELOW.

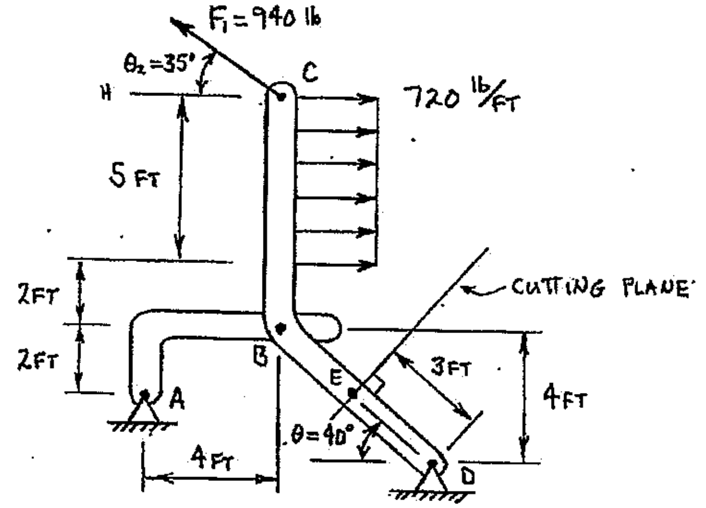

FIND: DETERMINE THE INTERNAL AXIAL FORCE, INTERNAL SHEAR FORCE AND INTERNAL BENDING MOMENT AT LOCATION E. ASSUME THAT THE "TOP" SURFACE OF MEMBER CD IS THE SURFACE FARTHEST FROM PIN A.

SOLUTION:

FBD OF MEMBER CD: (TO FIND REACTIONS AT PIN D)

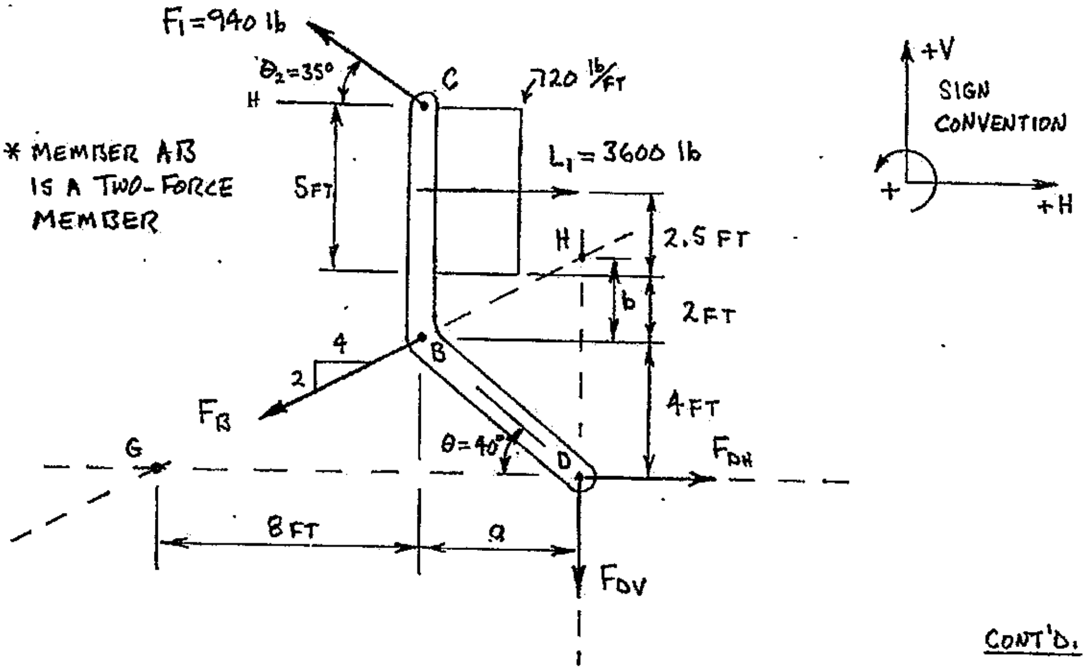

CONT'D.

PROBLEM: EXAMPLE 13-4 (CONT'D.)

DETERMINE LENGTHS a AND b:

$$\tan\theta = \frac{4\text{ FT}}{a}$$

$$a = \frac{4\text{ FT}}{\tan\theta}$$

$$a = \frac{4\text{ FT}}{\tan 40^\circ}$$

$$a = \underline{\underline{4.76701\text{ FT}}}$$

USING SIMILAR TRIANGLES:

$$\frac{b}{a} = \frac{2}{4}$$

$$b = \left(\frac{2}{4}\right)a$$

$$b = \left(\frac{2}{4}\right)(4.76701\text{ FT})$$

$$b = \underline{\underline{2.383505\text{ FT}}}$$

DETERMINE SUPPORT REACTIONS @ PIN D:

$$\Sigma M_G = 0$$

$$0 = \pm[F_{1H}(d\perp)] \pm [L_1(d\perp)] \pm [F_{DV}(d\perp)] \pm [(F_{1V})(d\perp)]$$

$$0 = +[(F_1)(\cos\theta_2)(11\text{FT})] - [(L_1)(8.5\text{FT})] - [(F_{DV})(8\text{FT}+a)] + [(F_1)(\sin\theta_2)(8\text{FT})]$$

$$F_{DV} = \frac{+[(F_1)(\cos\theta_2)(11\text{FT})] - [(L_1)(8.5\text{FT})] + [(F_1)(\sin\theta_2)(8\text{FT})]}{8\text{FT}+a}$$

$$F_{DV} = \frac{+[(940\text{ lb})(\cos 35^\circ)(11\text{FT})] - [(3600\text{ lb})(8.5\text{FT})] + [(940\text{ lb})(\sin 35^\circ)(8\text{FT})]}{8\text{FT} + 4.76701\text{ FT}}$$

$$F_{DV} = -1395.52\text{ lb}$$

$$F_{DV} = \underline{\underline{1395.52\text{ lb}\ \uparrow}}$$

CONT'D.

PROBLEM: EXAMPLE 13-4 (CONT'D.)

$\Sigma M_H = 0$

$0 = \pm[(F_{1H})(d\perp)] \pm [(F_{1V})(d\perp)] \pm [(L_1)(d\perp)] \pm [(F_{DH})(d\perp)]$

$0 = +[(F_1)(\cos\theta_2)(7\text{FT}-b)] - [(F_1)(\sin\theta_2)(a)] - [(L_1)(4.5\text{FT}-b)] + [(F_{DH})(4\text{FT}+b)]$

$$F_{DH} = \frac{-[(F_1)(\cos\theta_2)(7\text{FT}-b)] + [(F_1)(\sin\theta_2)(a)] + [(L_1)(4.5\text{FT}-b)]}{4\text{FT}+b}$$

$$F_{DH} = \frac{-[(940\text{ lb})(\cos 35°)(7\text{FT}-2.383505\text{ FT})] + [(940\text{ lb})(\sin 35°)(4.76701\text{ FT})] + [(3600\text{ lb})(4.5\text{FT}-2.383505\text{ FT})]}{4\text{FT}+2.383505\text{ FT}}$$

$F_{DH} = +1039.38\text{ lb}$

$F_{DH} = \underline{1039.38\text{ lb} \longrightarrow}$

FBD OF LOWER SECTION OF MEMBER CD: (CUT AT LOCATION E)

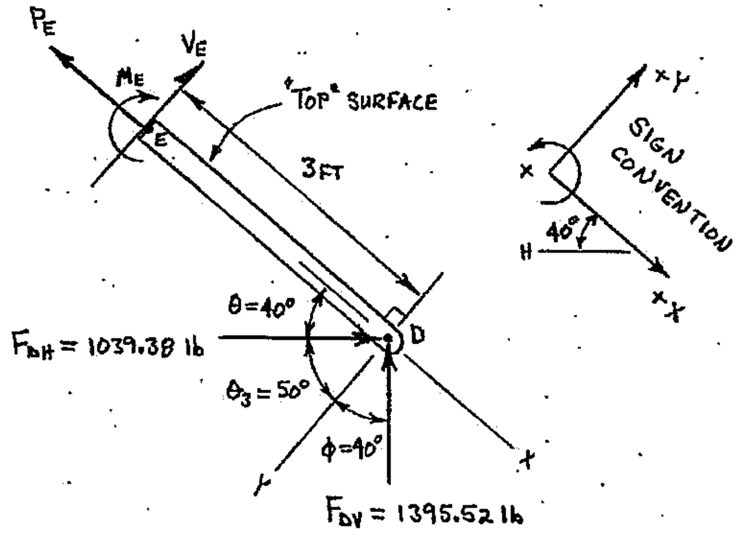

DETERMINE THE INTERNAL AXIAL FORCE, P_E:

$\Sigma F_x = 0$

$0 = \pm P_E \pm F_{DHx} \pm F_{DVx}$

$0 = -P_E + F_{DH}(\cos\theta) - F_{DV}(\sin\phi)$

$P_E = +F_{DH}(\cos\theta) - F_{DV}(\sin\phi)$

CONT'D.

PROBLEM: EXAMPLE 13-4 (CONT'D.)

$P_E = +F_{DH}(\cos\theta) - F_{DV}(\sin\phi)$

$P_E = +(1039.38\text{ lb})(\cos 40^\circ) - (1395.62\text{ lb})(\sin 40^\circ)$

$P_E = -100.812\text{ lb}$

$P_E = \underline{100.812\text{ lb (COMPRESSION)}}$

DETERMINE INTERNAL SHEAR FORCE, V_E:

$\Sigma F_Y = 0$

$0 = \pm V_E \pm F_{DH_Y} \pm F_{DV_Y}$

$0 = +V_E + F_{DH}(\sin\theta) + F_{DV}(\cos\phi)$

$V_E = -F_{DH}(\sin\theta) - F_{DV}(\cos\phi)$

$V_E = -(1039.38\text{ lb})(\sin 40^\circ) - (1395.62\text{ lb})(\cos 40^\circ)$

$V_E = -1737.13\text{ lb}$

$V_E = \underline{1737.13\text{ lb (NEGATIVE)}}$

DETERMINE THE INTERNAL BENDING MOMENT, M_E:

$\Sigma M_E = 0$

$0 = \pm M_E \pm [(F_{DH_Y})(d\perp)] \pm [(F_{DV_Y})(d\perp)]$

$0 = -M_E + [(F_{DH})(\sin\theta)(3\text{ FT})] + [(F_{DV})(\cos\phi)(3\text{ FT})]$

$M_E = +[(F_{DH})(\sin\theta)(3\text{ FT})] + [(F_{DV})(\cos\phi)(3\text{ FT})]$

$M_E = +[(1039.38\text{ lb})(\sin 40^\circ)(3\text{ FT})] + [(1395.62\text{ lb})(\cos 40^\circ)(3\text{ FT})]$

$M_E = +5211.39\text{ lb}\cdot\text{FT}$

$M_E = \underline{5211.39\text{ lb}\cdot\text{FT (POSITIVE)}}$

ANSWER:

$P_E = 100.8\text{ lb}$ (COMPRESSION)

$V_E = 1737\text{ lb}$ (NEGATIVE)

$M_E = 5211\text{ lb}\cdot\text{FT}$ (POSITIVE)

Practice Problems

13.1 An overhanging beam is loaded as shown below. Determine the internal axial force, internal shear force and internal bending moment at location C.

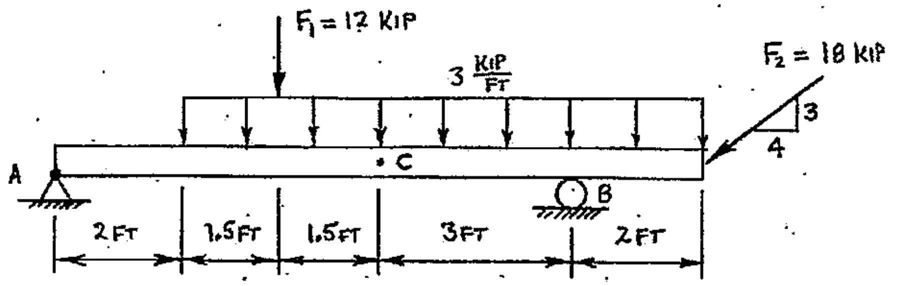

13.2 A cantilever beam is loaded as shown below. Determine the internal loads (axial force, shear force and bending moment) at locations A and B.

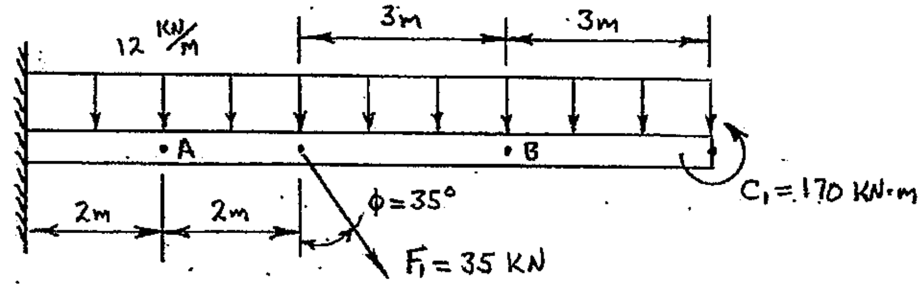

13.3 The beam shown below is supported by cable AB and a pin at C. Assume that the "top" surface of the beam is the surface closest to point A. Determine the internal axial force, internal shear force and internal bending moment at location E.

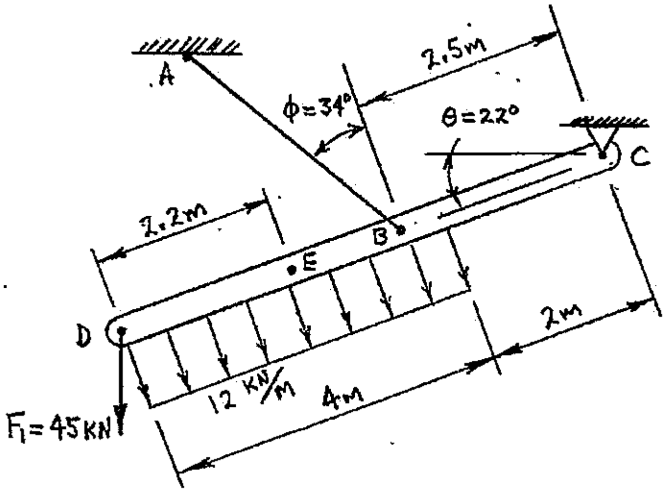

PRACTICE PROBLEMS

13.4 A couple is applied to a simply supported beam as shown below. Determine the internal axial force, internal shear force and internal bending moment at location C.

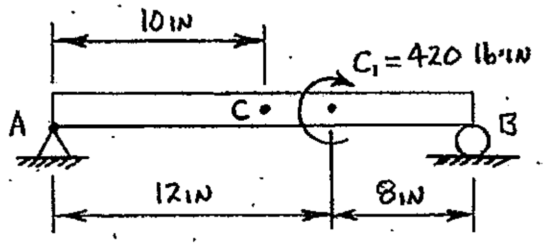

13.5 A cantilever beam is loaded as shown below. Determine the internal loads (axial force, shear force and bending moment) at location A.

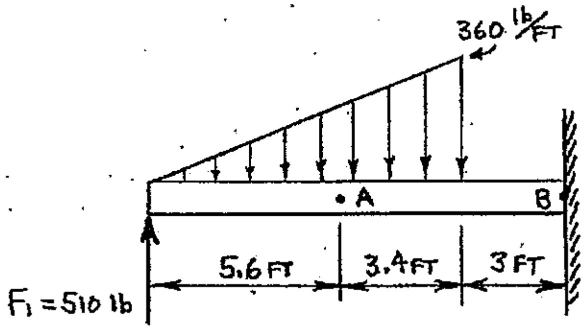

13.6 An overhanging beam is loaded as shown below. Determine the internal axial force, internal shear force and internal bending moment at locations C and D.

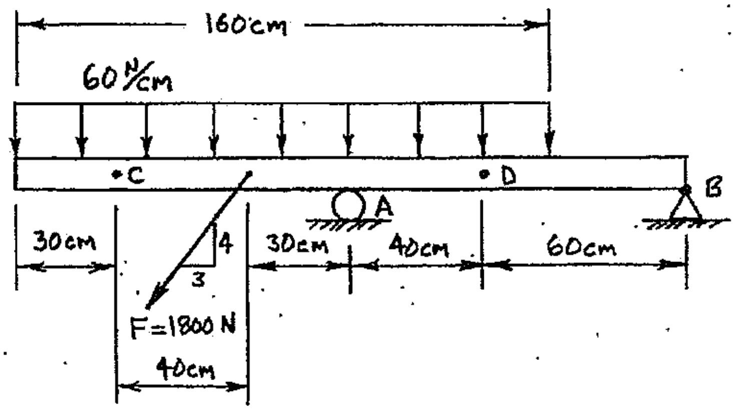

PRACTICE PROBLEMS

13.7 An overhanging beam is loaded as shown below. Determine the internal axial force, internal shear force and internal bending moment at location C.

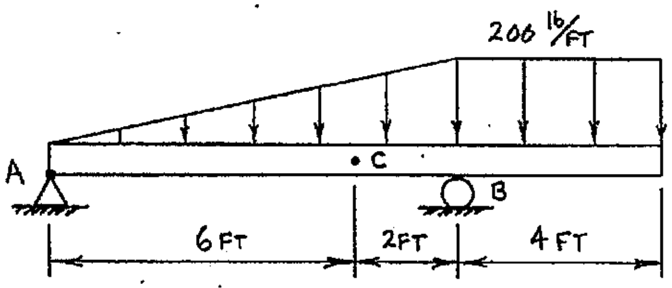

13.8 A simply supported beam is loaded as shown below. Determine the internal reactions (axial force, shear force and bending moment) at locations C and D.

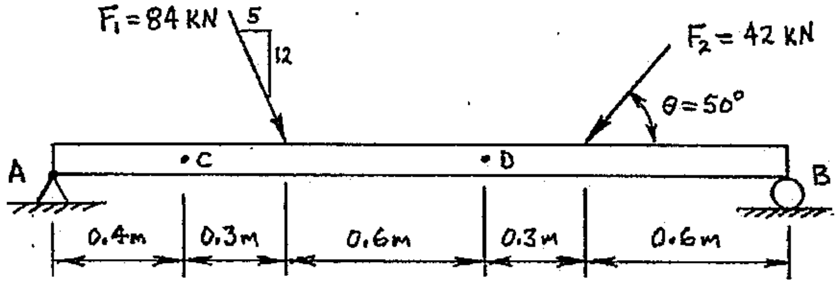

13.9 The frame shown below is constructed of four members; AC, AD, BE, and DF. There are pin connections at points A, B, C, D, E, and F. Determine the internal axial force, internal shear force and internal bending moment at a location 3-ft to the left of pin B on member AC (label the location as G).

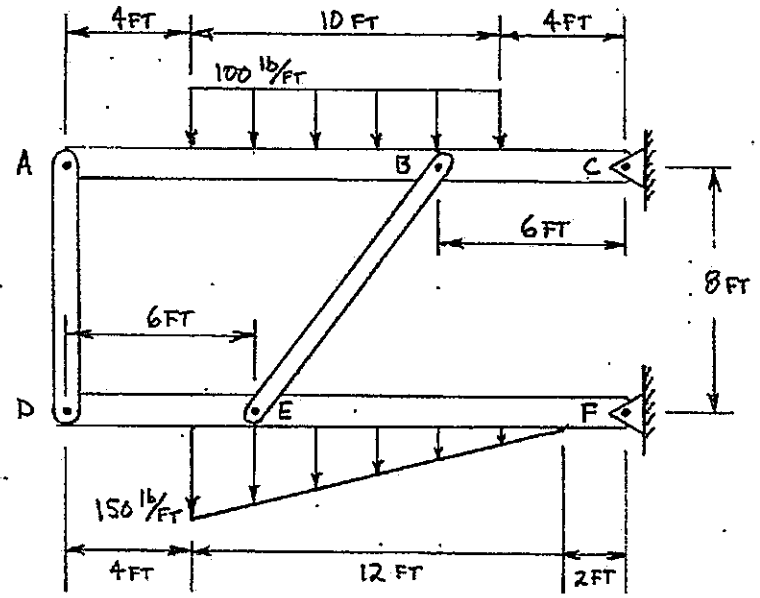

INTRODUCTION

The term **Load-Shear-Bending Moment Diagram** describes a set of diagrams that are constructed to show the variation in magnitude and mode of the internal shear force and the internal bending moment over the entire length of a structural member. Constructing a load-shear-bending moment diagram is a semi-graphical technique that involves both sketching and calculations. Curves are sketched to show the variation in the internal loads, and calculations are completed to determine actual values for the internal loads at various locations. A "typical" load-shear-bending moment diagram is shown in Figure 14-1.

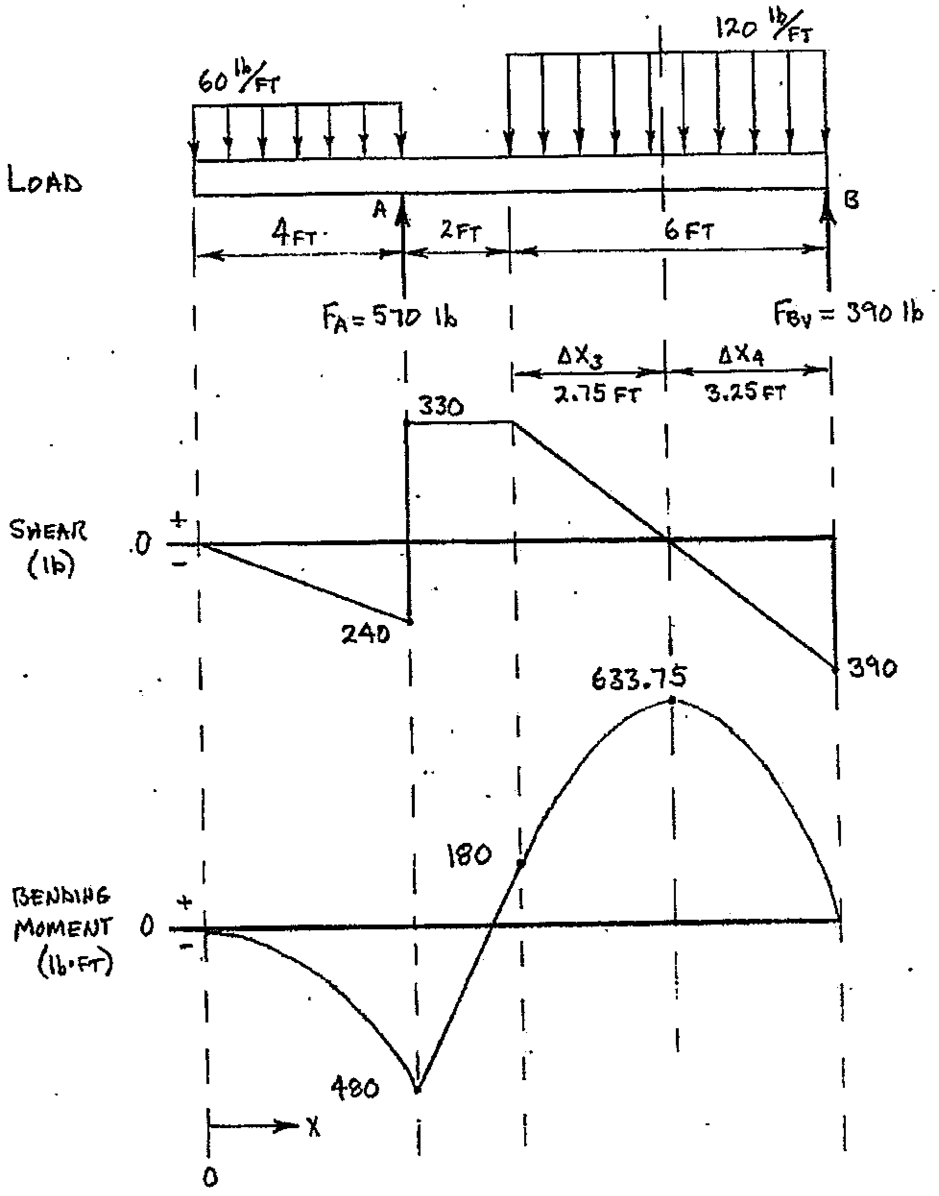

FIGURE 14-1 Load-Shear-Bending Moment Diagram

Load-Shear-Bending Moment Diagrams vs. Method of Sections

Normally, the *maximum* values (and corresponding modes) for internal shear force and internal bending moment, and the *locations* of these values along the length of a structural member, are of importance when designing a structural member to support a particular loading condition. Also of importance are the *locations* where the magnitudes of the internal shear force and internal bending moment are equal to zero.

The method of sections (Chapter 13) was used to find the internal loads at a *specific* location on a structural member by partitioning the beam into two sections and then working with only one of the sections. The method of sections could be used to find the magnitude, mode and location of the maximum values for internal loads, but the process is iterative and very tedious. A structural member could first be divided into 10 segments of equal length, partitioned (cut) at the boundary between each segment (cut at specific locations), a FBD constructed for one of the sections defined by each cutting plane and the values of the internal loads found at each of these locations. The maximum internal loads would then be located somewhere within the segment that was bounded by the largest values of the internal loads. The process described in the preceding two sentences would then be repeated within the segment bounded by the largest values for the internal loads in order to converge on both the magnitude and location of the maximum values. And then repeated again (and again)...... And, the maximum internal shear force and maximum internal bending moment will always be at different locations, so this entire process would have to be done twice.

Constructing a load-shear-bending moment diagram is a much more efficient method to determine magnitude and mode of the maximum internal shear force and internal bending moment, along with the locations of these values and the locations where these internal loads are equal to zero. The magnitude and mode of the *maximum* internal shear force and internal bending moment are easily seen on the load-shear-bending moment diagram shown in Figure 14-1 (previous page). The *locations* of the maximum values, and the locations where the internal loads are equal to zero, are also shown on the diagram. For example, the maximum internal bending moment is: M_{MAX} = 633.75 lb-ft (positive) at x = 8.75-ft. And, once constructed, the load-shear-bending moment diagram could also be used to determine the magnitude (and mode) of the internal shear force and/or internal bending moment at a specific location. Load-shear-bending moment diagrams are one of the quickest and most consistent methods for evaluating the internal shear force and internal bending moment in structural members.

Assumptions and Limitations when using Load-Shear-Bending Moment Diagrams

Most of the assumptions used in Chapter 13 will also be used when developing load-shear-bending moment diagrams. All structural members are assumed to be straight, with a constant cross-section that is symmetric about both transverse axes. All forces (concentrated forces and distributed loads) applied to a structural member

must be applied in the X-Y plane, as shown in Figure 14-2. Couples may be applied at any location along the member, but must also be applied in the X-Y plane (a couple's tendency for rotation must be with respect to a Z-axis). For equilibrium calculations, it is also assumed that all loads (acting loads and reactions, internal and external) are applied at the beam's centerline (the X-axis) regardless of how the loads are shown on the <u>GIVEN</u> diagram or on free body diagrams (see page 10-7, and Figure 10-11).

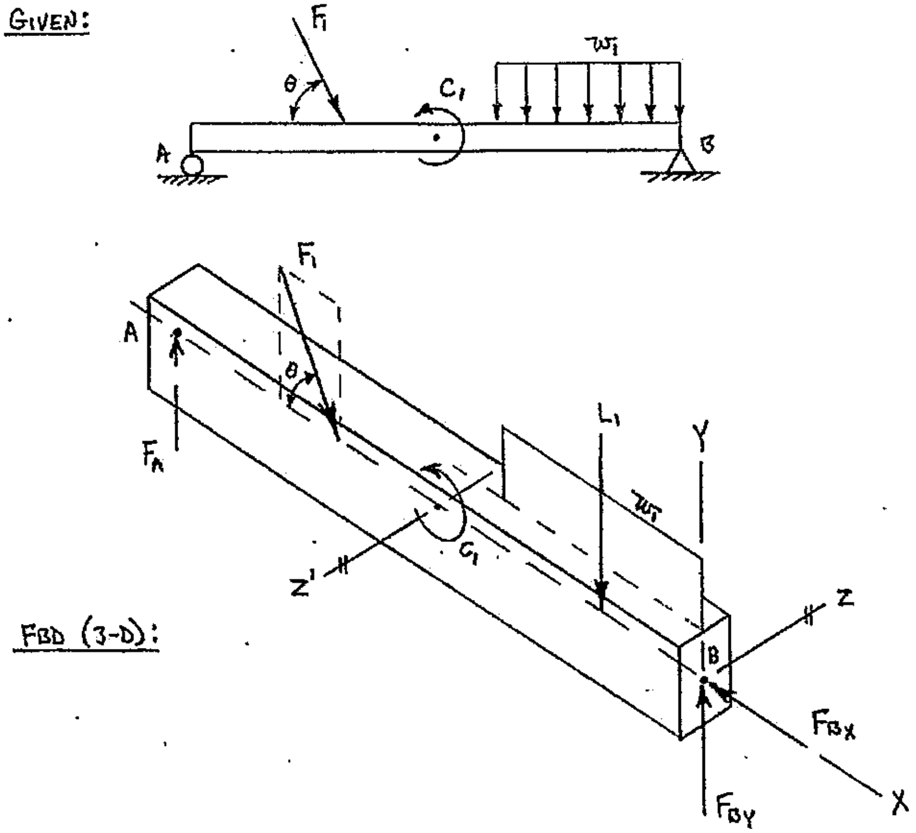

FIGURE 14-2 Assumptions for loadings applied to structural members

Any internal axial force that may exist in a structural member can not be determined using load-shear-bending moment diagrams. So, all forces (concentrated forces and distributed loads) shown on the load diagram <u>MUST</u> have lines of action perpendicular to (transverse to) the member's longitudinal axis. This limits the internal reactions in the member to only internal shear force and internal bending moment.

When constructing a load-shear-bending moment diagram, only the transverse components of applied loads and reactions are shown on the load diagram. Assume that a load-shear-bending moment diagram is to be constructed from the <u>GIVEN</u> beam shown in Figure 14-2. The load diagram would include the vertical reaction at A (F_A), the vertical component of force F_1 (F_{1Y}), the original distributed load (ω_1) and only the vertical reaction at B (F_{BY}). Figure 14-3 (following page) shows both the beam from Figure 14-2 (with all support reactions), and the resulting load diagram that would be used to determine the internal shear force and internal bending moment.

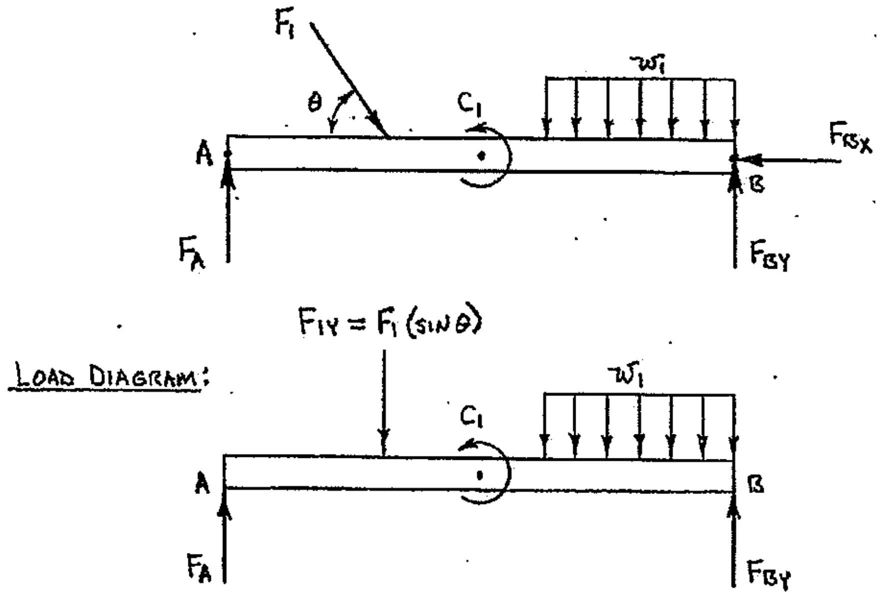

FIGURE 14-3 Beam from Figure 14-2 (including support reactions), and resulting Load Diagram with only transverse loads

The examples shown in this chapter are all based on structural members that have a horizontal longitudinal axis. However, load-shear-bending moment diagrams could also be constructed to determine the internal shear force and internal bending moment for a structural member with a longitudinal axis that is <u>NOT</u> horizontal, such as the beam shown in Figure 14-4. Again, only the transverse loads (loads perpendicular to the member's longitudinal axis) can be shown on the load diagram. And, the *orientation* of the beam (or structural member) CAN NOT BE CHANGED. So, the load-shear-bending moment diagram (the set of diagrams) is constructed using the original orientation of the member, as shown in Figure 14-5 (following page).

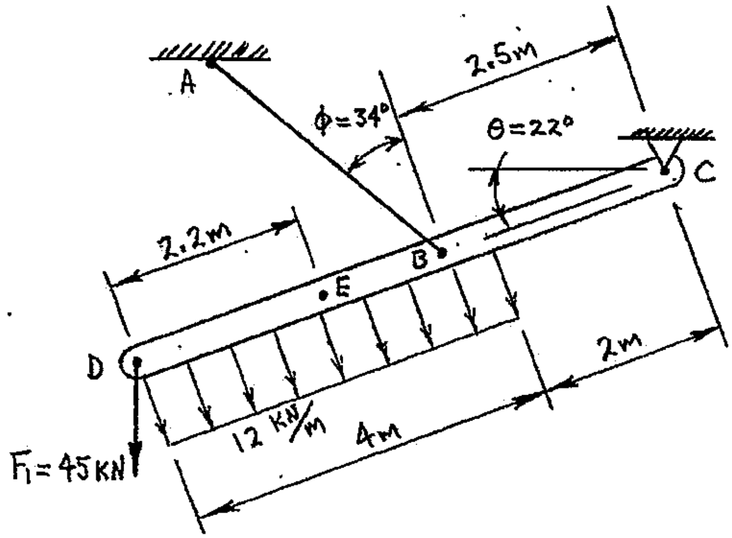

Figure 14-4 Diagram from Practice Problem 13.3 (page 13-28)

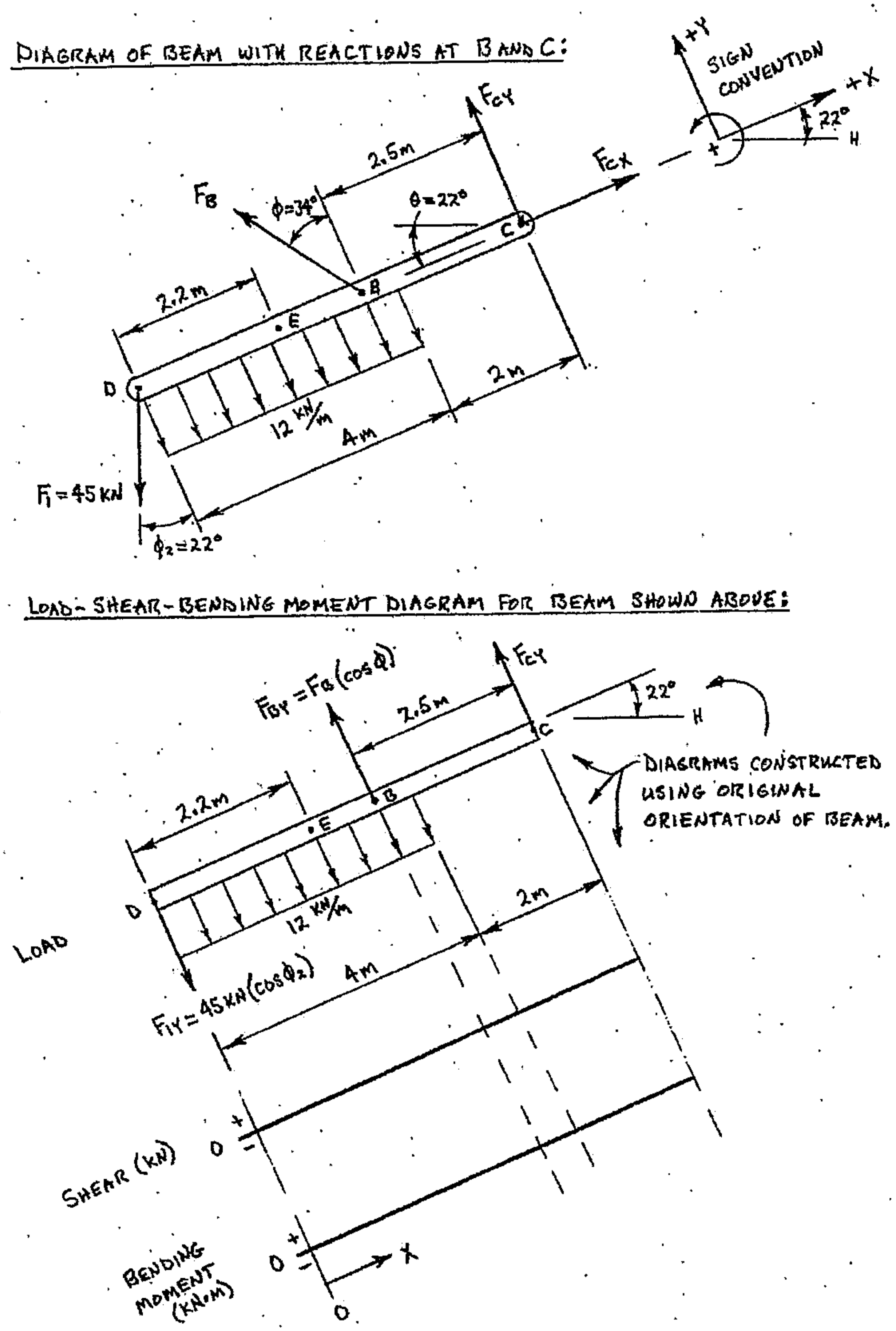

FIGURE 14-5 Diagram of beam shown in Figure 14-4 (previous page) with support reactions, and resulting load diagram used when constructing the load-shear-bending moment diagram.

Load-Shear-Bending Moment Diagrams; Slope-Area Method

A load-shear-bending moment diagram is a set of three individual diagrams; the load diagram, the internal shear diagram (normally just called the shear diagram) and the internal bending moment diagram (called bending moment diagram). The three individual diagrams are plotted one over the other, with the load diagram as the top (uppermost) diagram. The shear diagram is plotted directly below the load diagram, and then the moment diagram is plotted directly below the shear diagram. All three individual diagrams are plotted over the same length, typically the entire length of the structural member.

The slope-area method may be used to construct the shear and moment diagrams, provided the individual diagrams are plotted as a set; the load diagram directly above the shear diagram, and the shear diagram directly above the bending moment diagram. When using the slope-area method the **SLOPE** of a diagram's curve at a specific location (say x_1) **is equal to the value of the curve** in the diagram directly above, at that same location (x_1). The **change of a diagram's value** between any two locations (say locations x_1 and x_2) **is equal to the AREA** between the curve and the zero axis within that same interval (x_1 to x_2) in the diagram directly above.

General procedure for constructing Load-Shear-Bending Moment diagrams:

1. The set of three diagrams (load, shear and bending moment) must be constructed **LARGE** enough so that all information is clearly visible and easy to read/use by someone other than the person who originally constructed the diagrams.
2. The shear diagram is plotted directly below the load diagram, and then the moment diagram is plotted directly below the shear diagram. The individual diagrams should be spaced a reasonable distance apart from each other, as shown in this chapter's example problems.
3. All diagrams are plotted over the same length, typically the entire length of the structural member.
4. The shear and bending moment diagrams have a horizontal zero (0) axis; any quantity above the zero axis is positive (+), any quantity below the zero axis is negative (-). Positive and negative on the diagrams represents the **mode** of the internal shear force and internal bending moment as described in the Designer's Sign Convention.
5. Label each diagram (typically at its left end). Also label the zero axis, positive (+) and negative (-) on the shear and bending moment diagrams (see examples). If units are shown with the labels of the shear and bending moment diagrams, then units are not required with individual values shown on these diagrams.
6. The load diagram must include all influences that act on the structural member (reaction forces and/or couples, applied concentrated forces and distributed loads, applied couples). Normally the magnitude, direction and sense of support reactions

must be found prior to beginning construction of the load-shear-bending moment diagram.

7. All loads applied on the load diagram MUST have lines of action transverse (perpendicular) to the longitudinal axis of the structural member.
8. Distributed loads are shown on the load diagram in the form of the actual (given) distribution, NOT in the form of the distributed load's concentrated effect (the concentrated effect is used only to develop support reactions).
9. IN THE LOAD DIAGRAM, "downward" acting loads are considered to be negative (-), and "upward" acting loads are considered to be positive (+).
10. Applied couples MUST be shown on the load diagram at their point of application.
11. Light (or dashed) lines are drawn completely through the set of diagrams at each location where the loading changes on the load diagram. These are straight lines drawn perpendicular to the load diagram that continue through (and are ⊥ to) the zero axes of the shear and bending moment diagrams.
12. Concentrated loads produce an instantaneous response (an offset) in the shear diagram that is equal (in magnitude and sense) to the concentrated load. The offset in the shear diagram is directly under the point of application of the concentrated load in the load diagram.
13. Externally applied couples (in the load diagram) produce an instantaneous response (an offset) in the bending moment diagram that is equal (in magnitude) to the applied couple. The Designer's Sign Convention is used to determine the "sense" of the offset (whether the offset is toward positive, or toward negative). The offset in the bending moment diagram is directly below the point of application of the applied couple in the load diagram.
14. The SLOPE of a diagram's curve at a specific location (say x_1) **is equal to the value of the curve** in the diagram directly above, at that same location (x_1).
15. The **change of a diagram's value** between any two locations (say x_1 to x_2) **is equal to the AREA** between the curve and the zero axis in the diagram directly above, within the same interval (x_1 to x_2).
16. Locate (by dimension from a known reference) all points of zero shear in the shear diagram; **the moment diagram will have a local maximum (positive or negative) whenever the shear force is zero (0).**
17. Construct/draw light (or dashed) lines completely through the set of diagrams, perpendicular to the load diagram and the two zero axes, at any location where the shear curve crosses its zero axis (at any location where the internal shear force is equal to zero). Note: a light (or dashed) line may already exist at that location from work done via step 10.
18. The shear and bending moment diagrams **MUST HAVE CLOSURE**; the curves in each diagram must begin and end at zero.

Example 14-1 (following page) will be used to demonstrate many of the items listed in the procedure outlined above. Items not shown/demonstrated in Example 14-1 will be covered in other examples within this chapter.

Example 14-1 Develop a complete load-shear-bending moment diagram for the overhanging beam loaded as shown below. The support reactions for the beam are: F_A = 570-lb ↑, F_{BH} = 0, and F_{BV} = 390-lb ↑.

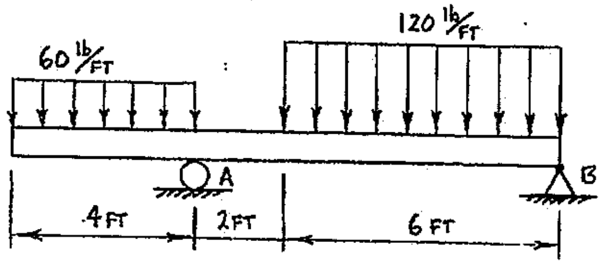

Since the support reactions have already been found, the first step in this solution is to construct the load diagram, along with the zero axes for the shear and bending moment diagrams. Each individual diagram is labeled, the zero axes and positive and negative modes are labeled on the shear and bending moment diagrams, and the location of x = 0 is shown just under the moment diagram (the arrow indicates that x increases as you move to the right along the beam). Light (dashed) lines are also constructed at every location where the loading condition changes on the load diagram.

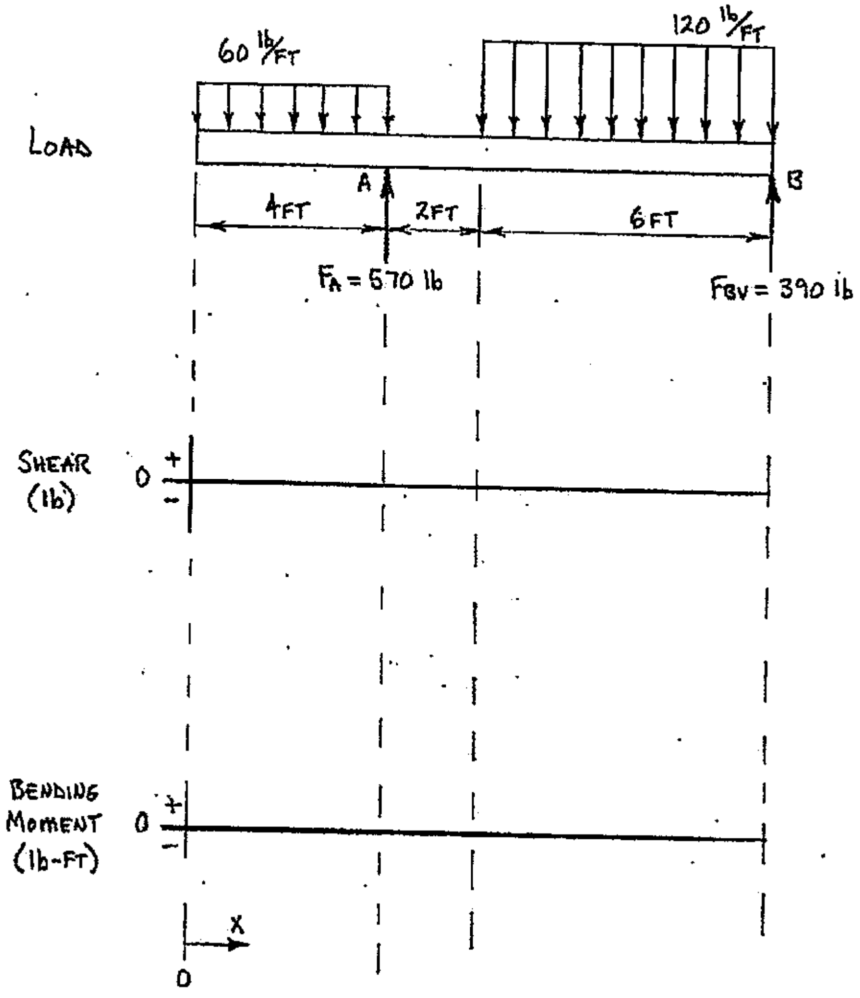

Example 14-1: (cont'd.)

The shear curve begins at zero, where x = 0 (at the left end of the beam), since the individual shear and bending moment diagrams must always begin and end at zero. The <u>CHANGE</u> in shear (ΔV_1) between x_0 and x_4 (x = 0-ft and x = 4-ft) is equal to the area in the diagram above, over the same interval (x_0 to x_4). The area of the load diagram between x_0 and x_4 is represented by the "rectangular" distributed load that has a base of 4-ft and a height of -60 lb/ft ("downward" acting loads are considered to be negative, upward acting loads are considered to be positive). So, the <u>CHANGE</u> in shear between x_0 and x_4 (ΔV_1) can be calculated as follows:

$$\Delta V_1 = \text{area above} = (\text{base})(\text{height})$$
$$\Delta V_1 = (4\text{ ft})\left(-60\,{}^{\text{lb}}\!/\!_{\text{ft}}\right)$$
$$\Delta V_1 = \underline{\underline{-240\text{ lb}}}$$

The <u>VALUE</u> of the internal shear force at location x_4 (V_4 at x = 4-ft) can be found by adding the change in shear between x_0 and x_4 (ΔV_1) and the value of the shear force at the beginning of the interval (V_0 = 0 at x_0).

$$V_4 = V_0 + \Delta V_1$$
$$V_4 = 0 + (-240\text{ lb})$$
$$V_4 = -240\text{ lb}$$
$$V_4 = \underline{\underline{240\text{ lb} \quad (\text{negative})}}$$

A curve must now be drawn on the shear diagram from $V_0 = 0$ to V_4 = - 240-lb. The <u>SLOPE</u> of a curve at any specific location is equal to the value of the curve in the diagram directly above, at the same location. Most (but not all) of the interval between x_0 = 0 and x_4 = 4-ft for the load and shear diagrams is shown below.

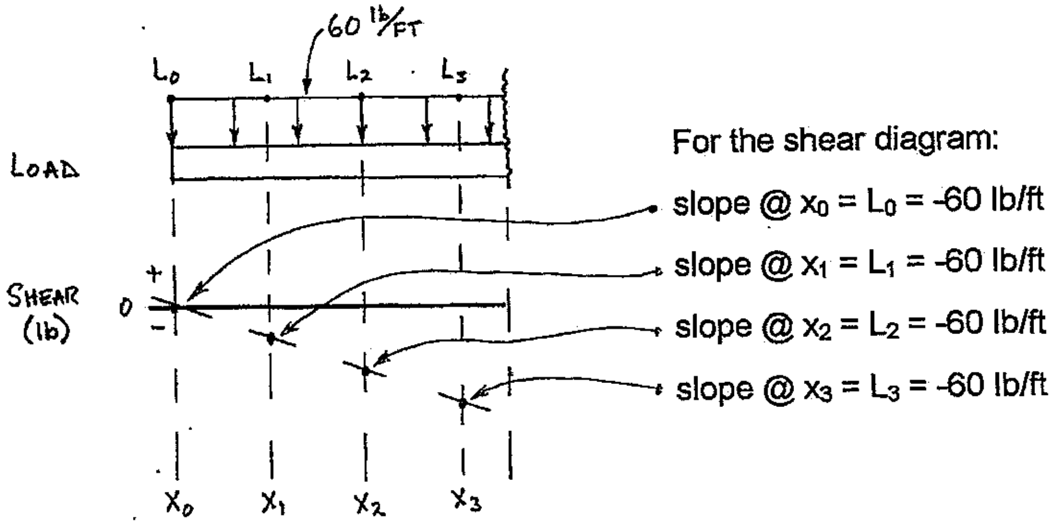

Since the VALUE of the load diagram is constant in the interval x_0 to x_4 (see previous page; $L_0 = L_1 = L_2 = L_3 = -60$ lb/ft), then the SLOPE of the shear curve will also be constant (- 60 lb/ft). Therefore, the shear curve between x_0 and x_4 is a line with constant negative slope (a straight line) as seen in the partial load-shear-bending moment diagram shown below:

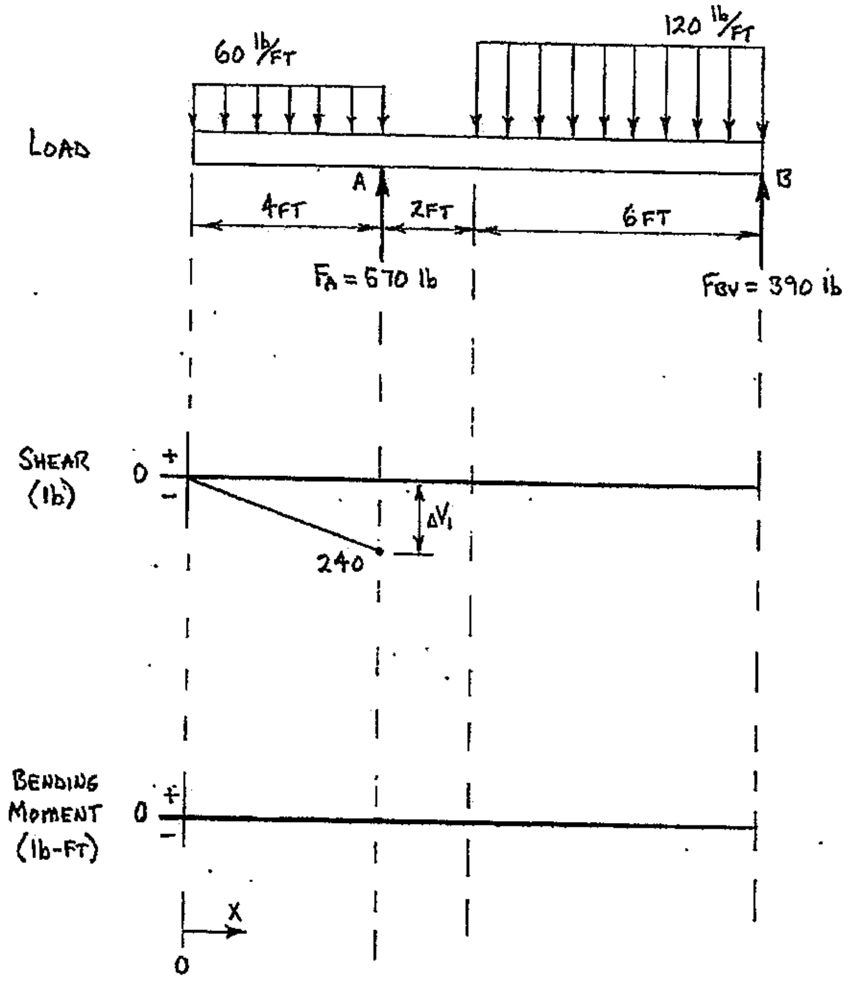

The support reaction at location A (F_A = 570-lb ↑) is encountered at x_4 on the load diagram. A concentrated force in the load diagram produces an instantaneous response (an offset) in the shear diagram that is equal (in magnitude and sense) to the concentrated force. At x_4, support reaction F_A (a concentrated force of 570-lb acting ↑) will cause an offset of + 570-lb, since "upward" acting loads are considered to be positive. Support reaction F_A is added to V_4 (V_4 = - 240-lb) as shown below:

$$V_{4B} = V_4 + F_A$$

$$V_{4B} = -240\text{ lb} + (+570\text{ lb})$$

$$V_{4B} = +330\text{ lb}$$

$$\underline{\underline{V_{4B} = 330\text{ lb} \quad (\text{positive})}}$$

Example 14-1: (cont'd.)

The offset in the shear curve caused by support reaction F_A can be seen in the partial load-shear-bending moment diagram shown below. Note that the value of the internal shear force at location x_4 is UNDEFINED; its value is 240-lb (negative) as the curve enters x_4 from the left, but is 330-lb (positive) as the curve leaves x_4 and continues to the right.

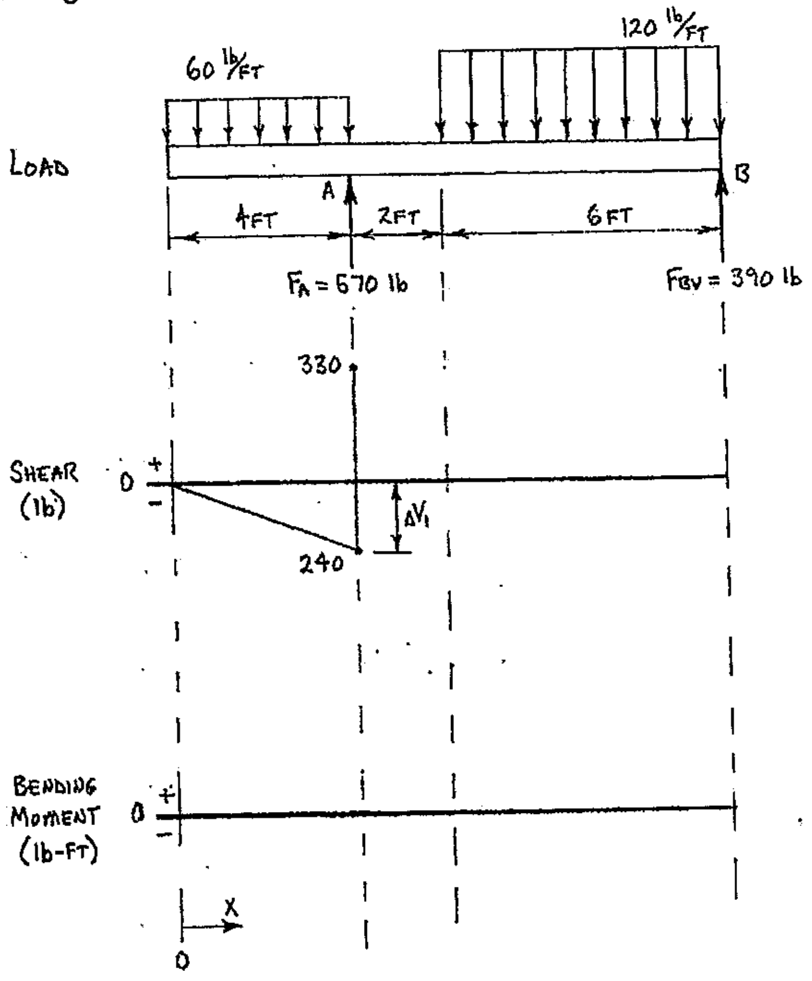

There are no loads shown on the load diagram in the interval from x_4 to x_6. So, the value of the curve on the load diagram at any location from x_4 to x_6 is zero (0). Recall that the SLOPE of a curve at any specific location is equal to the value of the curve in the diagram directly above, at the same location. So, the slope of the shear curve, from x_4 to x_6, is equal to zero at any location between x_4 and x_6. A curve with zero slope is a horizontal line, so the value of the shear force remains constant (shear = 330-lb, positive) at any location between x_4 and x_6, as seen on the partial load-shear-bending moment diagram shown on the following page.

Example 14-1: (cont'd.)

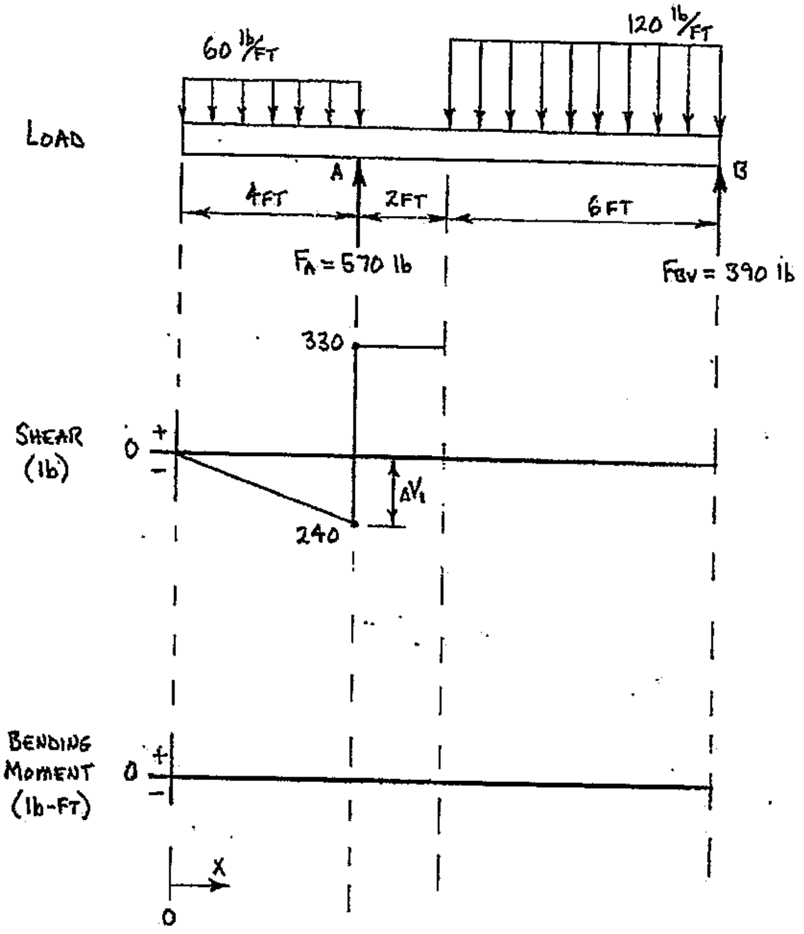

The CHANGE in shear (ΔV_2) between x_6 and x_{12} ($x = 6$-ft and $x = 12$-ft) is equal to the area in the diagram above, over the same interval (x_6 to x_{12}). The area of the load diagram between x_6 and x_{12} is represented by the "rectangular" distributed load that has a base of 6-ft and a height of -120 lb/ft ("downward" acting loads are considered to be negative, upward acting loads are considered to be positive). So, the CHANGE in shear between x_6 and x_{12} (ΔV_2) can be calculated as follows:

$$\Delta V_2 = \text{area above} = (\text{base})(\text{height})$$

$$\Delta V_2 = (6\text{ ft})\left(-120\,\text{lb}/\text{ft}\right)$$

$$\Delta V_2 = \underline{\underline{-720\text{ lb}}}$$

The VALUE of the internal shear force at location x_{12} (V_{12} at $x = 12$-ft) can be found by adding the change in shear between x_6 and x_{12} (ΔV_2) to the value of the shear force at the beginning of the interval ($V_6 = +330$-lb at x_6). The value of V_6 can be read directly from the shear diagram. Calculations for V_{12} are on the following page.

Example 14-1: (cont'd.)

$$V_{12} = V_6 + \Delta V_2$$
$$V_{12} = +330\text{ lb} + (-720\text{ lb})$$
$$V_{12} = -390\text{ lb}$$
$$V_{12} = 390\text{ lb} \quad \text{(negative)}$$

A curve must now be drawn on the shear diagram over the last 6-ft of the beam, from V_6 = +330-lb to V_{12} = -390-lb. The SLOPE of a curve at any specific location is equal to the value of the curve in the diagram directly above, at the same location. Since the VALUE of the load diagram is constant (load = -120-lb/ft) across the interval x_6 to x_{12}, then the SLOPE of the shear curve will also be constant (-120 lb/ft). Therefore, the shear curve between x_6 and x_{12} is a line with constant negative slope (a straight line) as seen in the partial load-shear-bending moment diagram shown below:

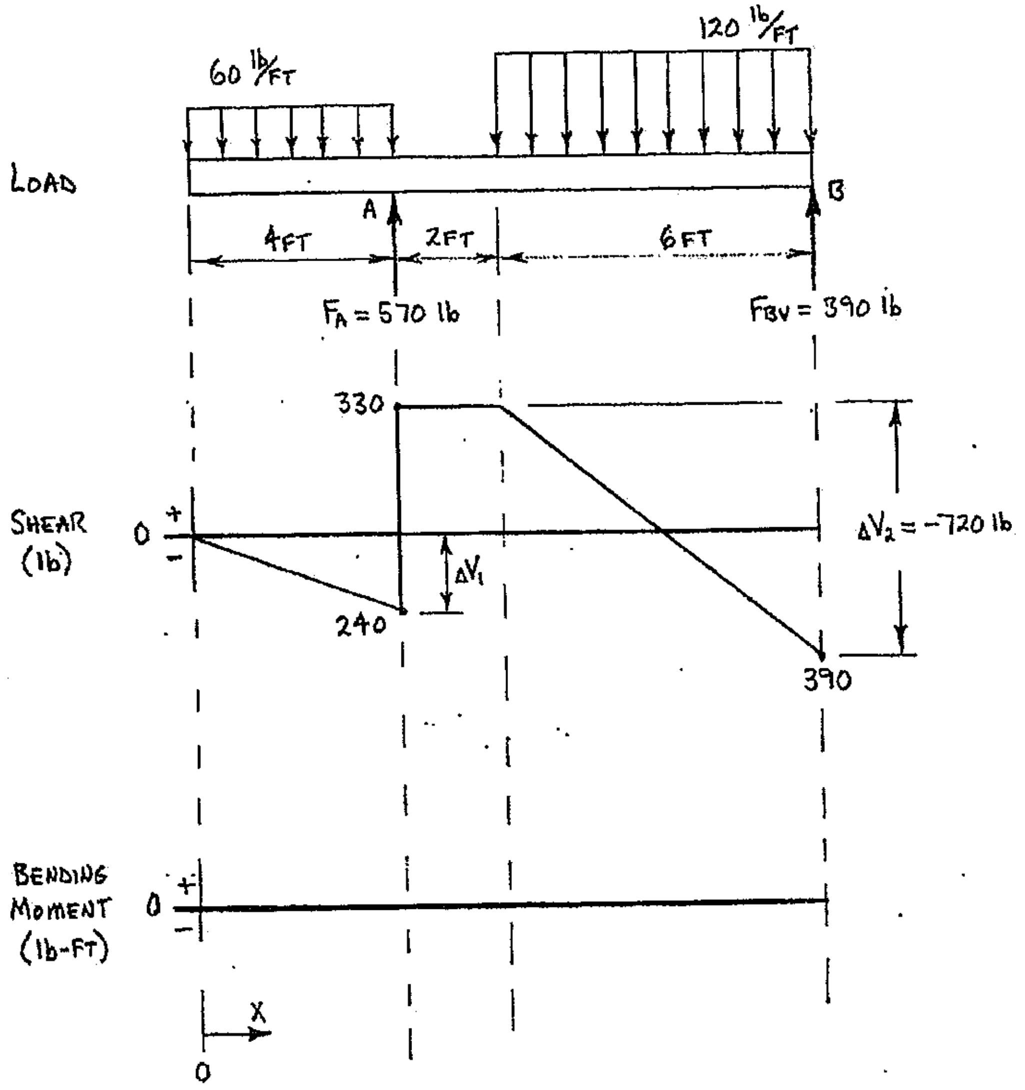

Example 14-1: (cont'd.)

The support reaction at the right end of the beam (F_{BV} = 390-lb ↑ at x_{12}) will cause an instantaneous response (an offset) in the shear curve at that location. The offset at x_{12} will be equal in both magnitude and sense to the support reaction F_{BV}. Summing the value of the shear curve (390-lb, negative) at x_{12} with the offset from F_{BV} (390-lb, positive) returns the shear curve to zero and the shear diagram has closure (begins and ends at zero) as seen below.

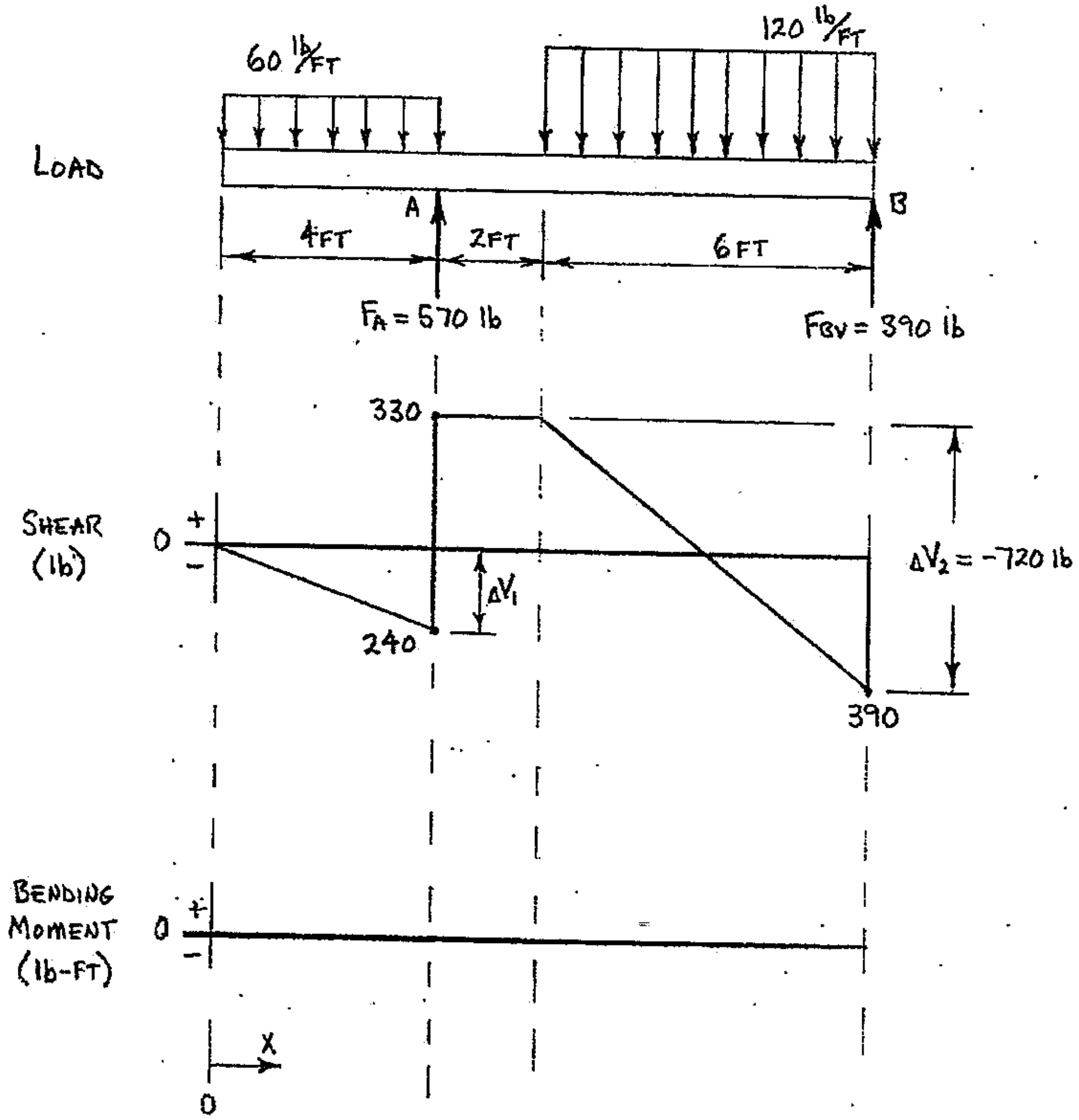

Note that the value of the internal shear force at the right end of the beam (location x_{12}) is <u>UNDEFINED</u>. At x_{12}, the internal shear force is negative, and in the range from zero to 390-lb. If asked for the maximum internal shear force on this beam, the answer would typically be given as V_{MAX} = 390-lb (negative), at x = 12-ft. However, the maximum shear force is technically just to the left of location x_{12}, and then becomes undefined once <u>at</u> location x_{12}.

Example 14-1: (cont'd.)

The internal bending moment will have a local maximum value (positive or negative) at every location where the internal shear force is equal to zero. The shear curve crosses the zero axis at two locations; at x_4, and again at a location between x_6 and x_{12}. A dashed line is drawn completely through all three individual diagrams (perpendicular to the load diagram and the two zero axes) at the location where the shear curve crosses the zero axis between x_6 and x_{12}. The interval from x_6 to x_{12} is then divided into two segments, Δx_3 and Δx_4, as seen in the partial load-shear-bending moment diagram shown below.

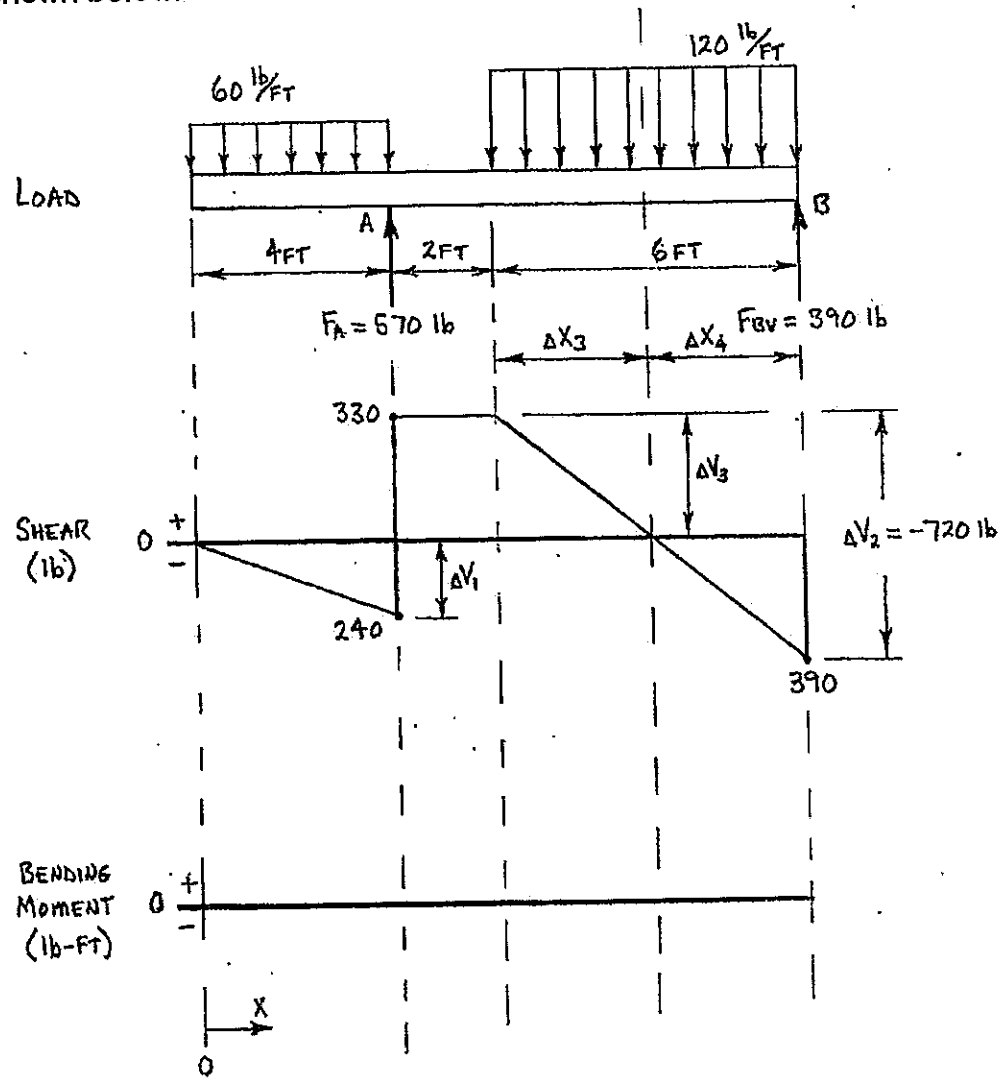

The length Δx_3 can be found using one of two methods. The first method employs similar triangles found in the shear diagram above. The triangle with base of Δx_3 and height of ΔV_3 is similar to the larger triangle with base of 6-ft (the interval from x_6 to x_{12}) and height of ΔV_2. Calculations for this method are shown on the following page.

Example 14-1: (cont'd.)

From similar triangles:

$$\frac{\Delta x_3}{\Delta V_3} = \frac{6\text{ ft}}{\Delta V_2}$$

$$\Delta x_3 = \left(\frac{6\text{ ft}}{\Delta V_2}\right)(\Delta V_3)$$

$$\Delta x_3 = \left(\frac{6\text{ ft}}{-720\text{ lb}}\right)(-330\text{ lb})$$

$$\Delta x_3 = \underline{\underline{2.75\text{ ft}}}$$

The length Δx_3 can also be found using a principle from the slope-area method, specifically that the change in a diagram's value between any two locations (say, the interval Δx_3) is equal to the area between the curve and the zero axis in the diagram directly above, over the same interval (Δx_3). The change (ΔV_3) in the shear diagram over the interval Δx_3 can be found from area in the load diagram over the interval Δx_3; this area is rectangular with base of Δx_3 and height of -120 lb/ft. The calculation of length Δx_3 by this method is as follows:

$$\text{change below} = \text{area above}$$

$$\Delta V_3 = \text{area of load diagram over interval } \Delta x_3$$

$$\Delta V_3 = (\text{base})(\text{height})$$

$$\Delta V_3 = (\Delta x_3)\left(-120\,\text{lb}/\text{ft}\right)$$

$$\Delta x_3 = \frac{\Delta V_3}{-120\,\text{lb}/\text{ft}}$$

$$\Delta x_3 = \frac{-330\text{ lb}}{-120\,\text{lb}/\text{ft}}$$

$$\Delta x_3 = \underline{\underline{2.75\text{ ft}}} \qquad \text{(same as found above)}$$

Once Δx_3 has been found, Δx_4 can be determined by subtracting Δx_3 from the length between x_6 and x_{12} (6-ft). Calculations for Δx_4 are shown below. Values for Δx_3 and Δx_4 should be transferred to (shown on) the load-shear-bending moment diagram once their values are known.

$$\Delta x_4 = 6\text{ ft} - \Delta x_3$$

$$\Delta x_4 = 6\text{ ft} - 2.75\text{ ft}$$

$$\Delta x_4 = \underline{\underline{3.25\text{ ft}}}$$

Example 14-1: (cont'd.)

Slope-area techniques are now used to construct the bending moment diagram, and to determine values at various locations on the diagram. The bending moment curve begins at zero, where x = 0 (at the left end of the beam), since the individual shear and bending moment diagrams must always begin and end at zero. The <u>CHANGE</u> in bending moment (ΔM_1) between x_0 and x_4 (x = 0-ft and x = 4-ft) is equal to the area in the diagram above, over the same interval (x_0 to x_4). The area of the shear diagram between x_0 and x_4 is negative (this area is below the zero axis), and is represented by the triangular area that has a base of 4-ft and a height of -240-lb. So, the <u>CHANGE</u> in bending moment between x_0 and x_4 (ΔM_1) can be calculated as follows:

$$\Delta M_1 = \text{area above} = \frac{1}{2}(\text{base})(\text{height})$$

$$\Delta M_1 = \frac{1}{2}(4\text{ ft})(-240\text{ lb})$$

$$\Delta M_1 = \underline{\underline{-480\text{ lb-ft}}}$$

The <u>VALUE</u> of the internal bending moment at location x_4 (M_4 at x = 4-ft) can be found by adding the change in bending moment between x_0 and x_4 (ΔM_1) to the value of the bending moment at the beginning of the interval (M_0 = 0 at x_0).

$$M_4 = M_0 + \Delta M_1$$

$$M_4 = 0 + (-480\text{ lb-ft})$$

$$M_4 = -480\text{ lb-ft}$$

$$M_4 = \underline{\underline{480\text{ lb-ft} \quad (\text{negative})}}$$

A curve must now be drawn on the bending moment diagram from M_0 = 0 to M_4 = 480 lb-ft (negative). The <u>SLOPE</u> of a curve at any specific location is equal to the value of the curve in the diagram directly above, at the same location. The interval from x_0 = 0 to x_4 = 4-ft for the shear and bending moment diagrams is shown below.

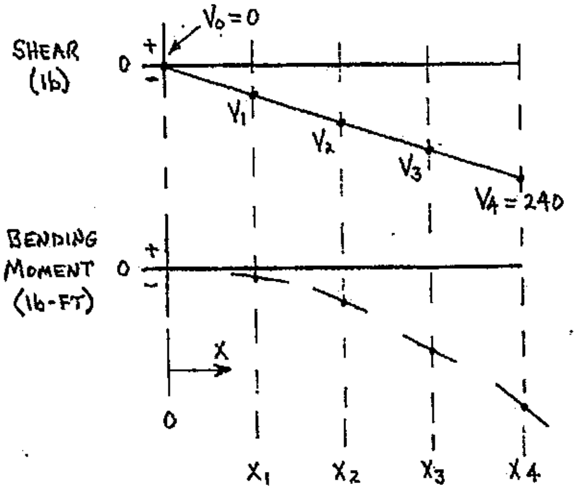

For bending moment diagram:

slope @ x_0 = V_0 = 0

slope @ x_1 = V_1 = -60-lb

slope @ x_2 = V_2 = -120-lb

slope @ x_3 = V_3 = -180-lb

slope @ x_4 = V_4 = -240-lb

Example 14-1: (cont'd.)

From x_0 to x_4, values on the shear curve vary linearly from $V_0 = 0$ to $V_4 = -240$-lb ($V_1 = -60$-lb, $V_2 = -120$-lb, $V_3 = -180$-lb). The <u>SLOPE</u> at a specific location on a diagram is equal to the value of the diagram directly above, at the same location. Therefore, the slope of the bending moment diagram at x_0 is equal to zero (horizontal), and the slope at x_4 is equal to -240-lb. Values on the shear curve over the interval from x_0 to x_4 begin at zero, and then are negative and increase from left to right. So, the slope of the bending moment curve over this interval begins at zero (horizontal) and then is negative and increases (becomes steeper) from left to right as seen below.

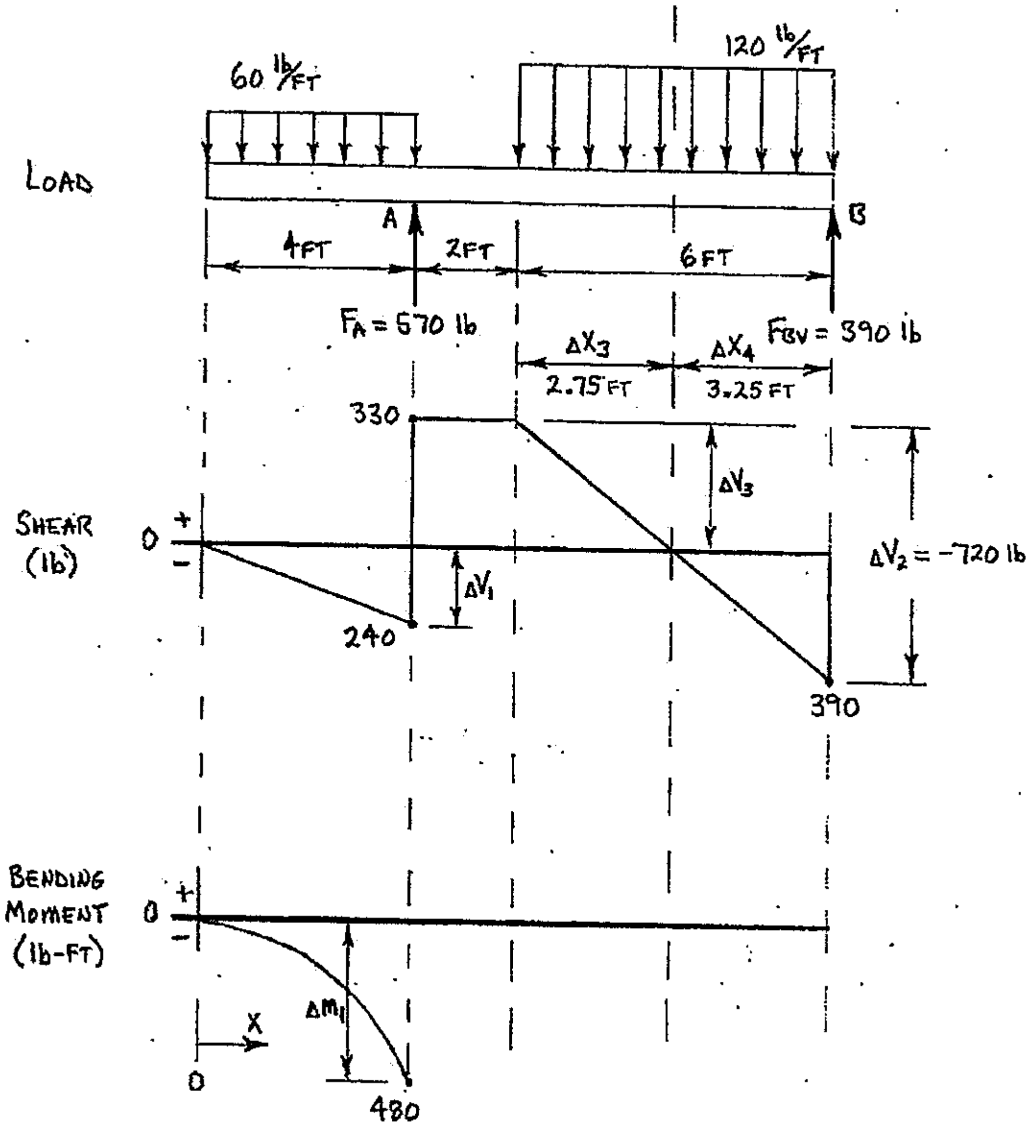

Example 14-1: (cont'd.)

The CHANGE (ΔM_2) in the bending moment diagram from x_4 to x_6 is equal to the area between the curve and the zero axis in the shear diagram (the diagram directly above), over the same interval (x_4 to x_6). The area of the shear diagram from x_4 to x_6 is positive (this area is above the zero axis) and is rectangular, with a base of 2-ft and a height of +330-lb. Calculations for ΔM_2 are shown below:

$$\Delta M_2 = \text{area above}$$
$$\Delta M_2 = (\text{base})(\text{height})$$
$$\Delta M_2 = (2\text{ ft})(+330\text{ lb})$$
$$\Delta M_2 = \underline{\underline{+660\text{ lb-ft}}}$$

The VALUE of the internal bending moment at location x_6 (M_6 at x = 6-ft) can be found by summing the change in bending moment between x_4 and x_6 (ΔM_2) with the value of the bending moment at the beginning of the interval (M_4 = 480 lb-ft, negative).

$$M_6 = \pm M_4 \pm \Delta M_2$$
$$M_6 = -M_4 + \Delta M_2$$
$$M_6 = -480\text{ lb-ft} + 660\text{ lb-ft}$$
$$M_6 = +180\text{ lb-ft}$$
$$M_6 = \underline{\underline{180\text{ lb-ft} \quad (\text{positive})}}$$

A curve must now be drawn on the bending moment diagram for the interval from x_4 to x_6, where the bending moment changes from 480 lb-ft (negative) at x_4 to 180 lb-ft (positive) at x_6. The SLOPE of a curve at any specific location is equal to the value of the curve in the diagram directly above, at the same location. Since the VALUE of the shear diagram is constant (shear = +330-lb) across the interval x_4 to x_6, then the SLOPE of the bending moment curve will also be constant (+330-lb) over the same interval. Therefore, the bending moment curve between x_4 and x_6 is a line with constant positive slope (a straight line) as seen in the partial load-shear-bending moment diagram shown on the following page.

Example 14-1: (cont'd.)

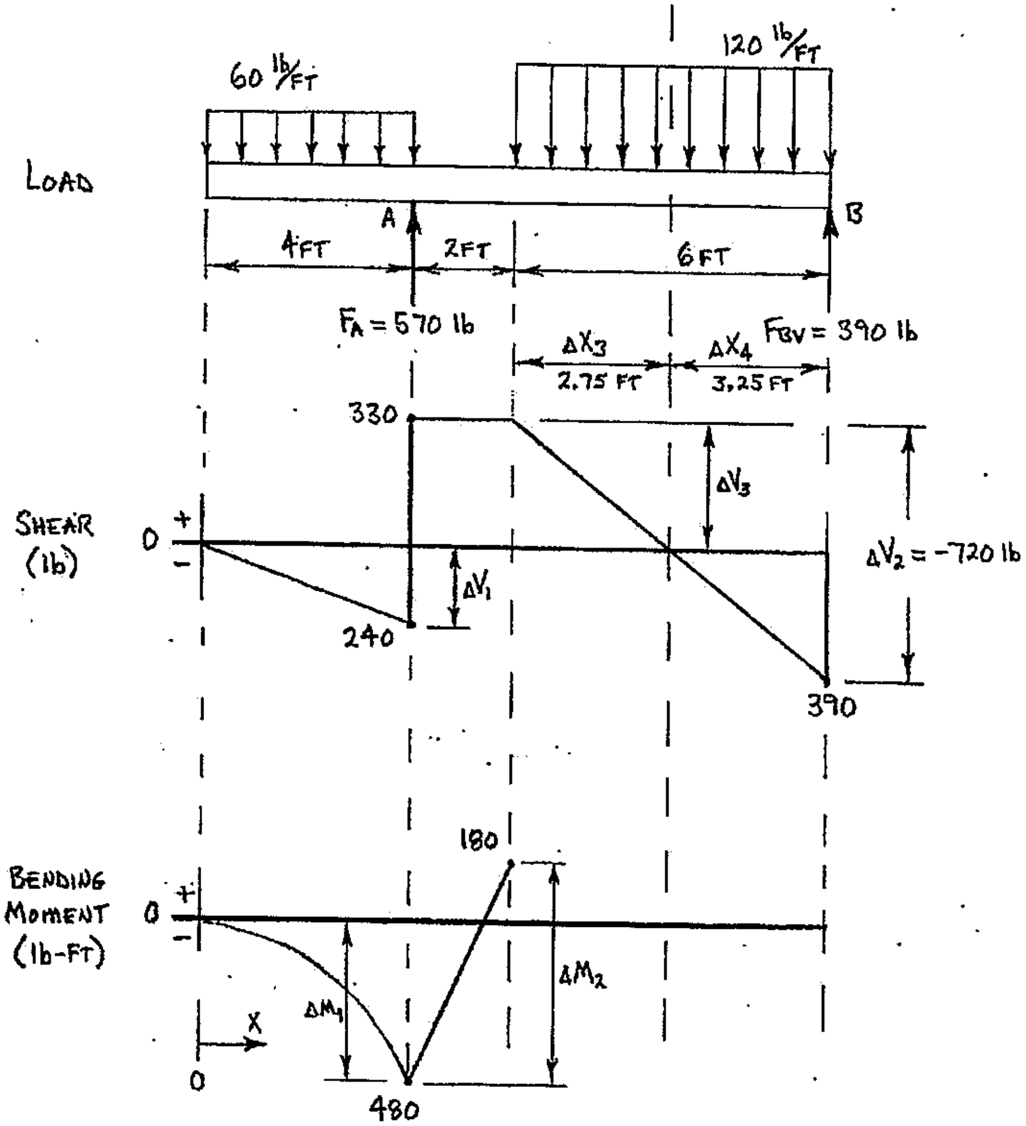

The CHANGE in bending moment (ΔM_3) over the interval Δx_3 is equal to the area in the diagram above, over the same interval (Δx_3). The area of the shear diagram over the interval Δx_3 is positive (this area is above the zero axis), and is represented by the triangular area that has a base of Δx_3 and a height of +330-lb. So, the CHANGE in bending moment over the interval Δx_3 can be calculated as follows:

$$\Delta M_3 = \text{area above} = \tfrac{1}{2}(\text{base})(\text{height})$$

$$\Delta M_3 = \tfrac{1}{2}(\Delta x_3)(+330\,\text{lb})$$

$$\Delta M_3 = \tfrac{1}{2}(2.75\,\text{ft})(+330\,\text{lb})$$

$$\Delta M_3 = \underline{\underline{+453.75\,\text{lb-ft}}}$$

Example 14-1: (cont'd.)

The VALUE of the internal bending moment at location $x_{8.75}$ ($M_{8.75}$ at x = 8.75-ft) can be found by adding the change in bending moment over the interval Δx_3 (ΔM_3 = 453.75 lb-ft, positive) to the value of the bending moment at the beginning of the interval (M_6 = 180 lb-ft, positive at x_0).

$$M_{8.75} = M_6 + \Delta M_3$$
$$M_{8.75} = +180 \text{ lb-ft} + (+453.7 \text{ lb-ft})$$
$$M_{8.75} = +633.75 \text{ lb-ft}$$
$$M_{8.75} = 633.75 \text{ lb-ft} \quad \text{(positive)}$$

A curve must now be drawn on the bending moment diagram from M_6 = 180 lb-ft (positive) to $M_{8.75}$ = 633.75 lb-ft (positive). The SLOPE of a curve at any specific location is equal to the VALUE of the curve in the diagram directly above, at the same location. The interval from x_6 to $x_{8.75}$ for the shear and bending moment diagrams is shown below:

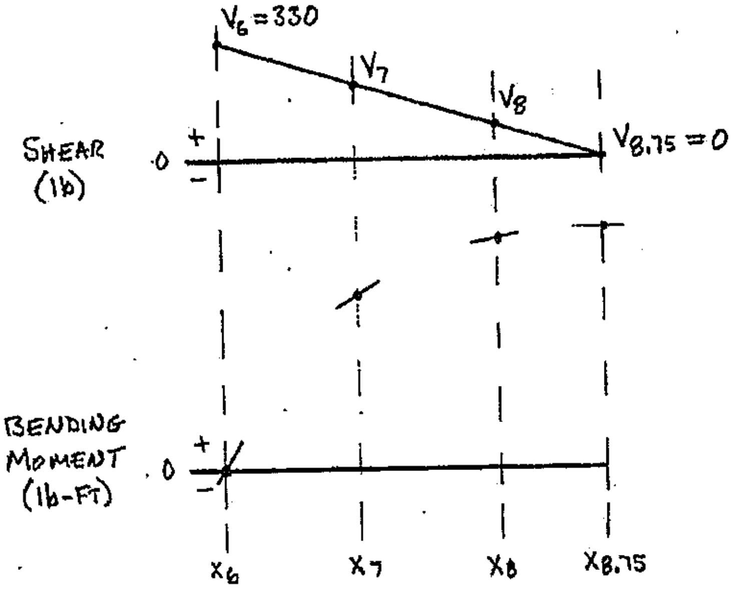

For bending moment diagram:

slope @ x_6 = V_6 = +330-lb

slope @ x_7 = V_7 = +210-lb

slope @ x_8 = V_8 = +90-lb

slope @ $x_{8.75}$ = $V_{8.75}$ = 0

From x_6 to $x_{8.75}$, values on the shear curve vary linearly but decrease from V_6 = 330-lb (positive) to $V_{8.75}$ = 0. The SLOPE at a specific location on a diagram is equal to the value of the diagram directly above, at the same location. Therefore, the slope of the bending moment diagram at x_6 is equal to +330-lb, and the slope at $x_{8.75}$ is equal to zero (0). Values on the shear curve over the interval from x_6 to $x_{8.75}$ begin at +330-lb and are positive but decrease from left to right. So, the SLOPE of the bending moment curve over this interval (Δx_3) begins at +330-lb and is positive but decreases (becomes less steep) from left to right, and is horizontal (slope of zero) just as it reaches location $x_{8.75}$. The bending moment curve for the interval Δx_3 is seen in the partial load-shear-bending moment diagram shown on the following page.

Example 14-1: (cont'd.)

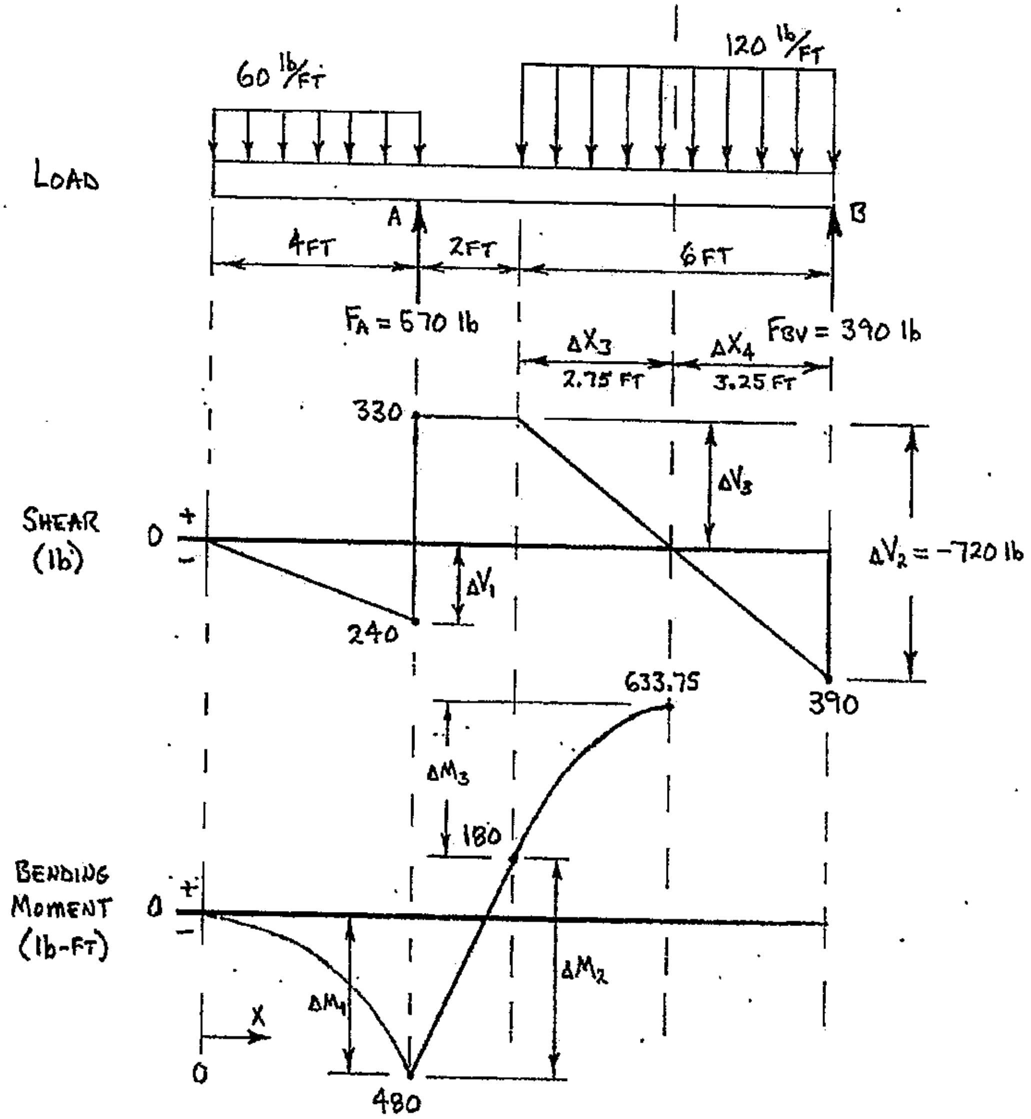

The CHANGE in bending moment (ΔM_4) over the interval Δx_4 is equal to the area in the shear diagram (the diagram above), over the same interval (Δx_4). The area of the shear diagram over the interval Δx_4 is negative (this area is below the zero axis), and is represented by the triangular area that has a base of Δx_4 and a height of -390-lb. So, the CHANGE in bending moment over the interval Δx_4 can be calculated as follows:

$$\Delta M_4 = \text{area above} = \tfrac{1}{2}(\text{base})(\text{height})$$

$$\Delta M_4 = \tfrac{1}{2}(\Delta x_4)(-390\text{ lb})$$

$$\Delta M_4 = \tfrac{1}{2}(3.25\text{ ft})(-390\text{ lb})$$

$$\Delta M_4 = \underline{\underline{-633.75\text{ lb-ft}}}$$

Example 14-1: (cont'd.)

The VALUE of the internal bending moment at location x_{12} (M_{12} at x = 12-ft; the right end of the beam) can be found by summing the change in bending moment over the interval Δx_4 (ΔM_4 = -633.75 lb-ft) with the value of the bending moment at the beginning of the interval ($M_{8.75}$ = 633.75 lb-ft, positive). Since the shear and bending moment diagrams must have closure (must begin and end at zero) this calculation (shown below) should return a value of zero (0) for M_{12}.

$$M_{12} = \pm M_{8.75} \pm \Delta M_4$$
$$M_{12} = +M_{8.75} - \Delta M_4$$
$$M_{12} = +633.75 \text{ lb-ft} - 633.75 \text{ lb-ft}$$
$$M_{12} = \underline{\underline{0}}$$

A curve can now be drawn on the bending moment diagram from $M_{8.75}$ = 633.75 lb-ft (positive) to M_{12} = 0. The SLOPE of a curve at any specific location is equal to the VALUE of the curve in the diagram directly above, at the same location. The interval from $x_{8.75}$ to x_{12} for the shear and bending moment diagrams is shown below:

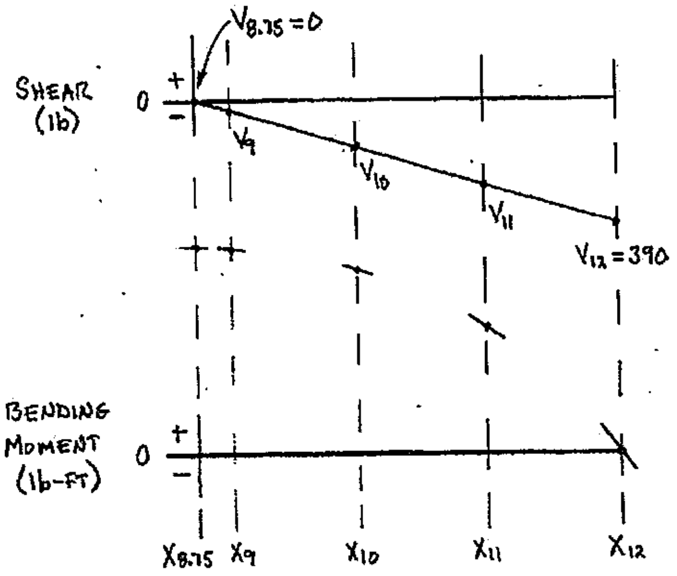

For bending moment diagram:

slope @ $x_{8.75} = V_{8.75} = 0$

slope @ $x_9 = V_9$ = -30-lb

slope @ $x_{10} = V_{10}$ = -150-lb

slope @ $x_{11} = V_{11}$ = -270-lb

slope @ $x_{12} = V_{12}$ = -390-lb

From $x_{8.75}$ to x_{12}, values on the shear curve vary linearly and increase from $V_{8.75}$ = 0 to V_{12} = 390-lb (negative). The SLOPE at a specific location on a diagram is equal to the value of the diagram directly above, at the same location. Therefore, the slope of the bending moment diagram at $x_{8.75}$ is equal to 0, and the slope at x_{12} is equal to -390-lb. Values on the shear curve over the interval from $x_{8.75}$ to x_{12} begin at zero, are negative and increase from left to right. So, the SLOPE of the bending moment curve over this interval (Δx_4) is horizontal (zero slope) at $x_{8.75}$ and is negative and increases (becomes steeper) from left to right. The bending moment curve for the interval Δx_4 is seen in the now complete load-shear-bending moment diagram shown on the following page.

Example 14-1: (cont'd.)

COMPLETED LOAD-SHEAR-BENDING MOMENT DIAGRAM:

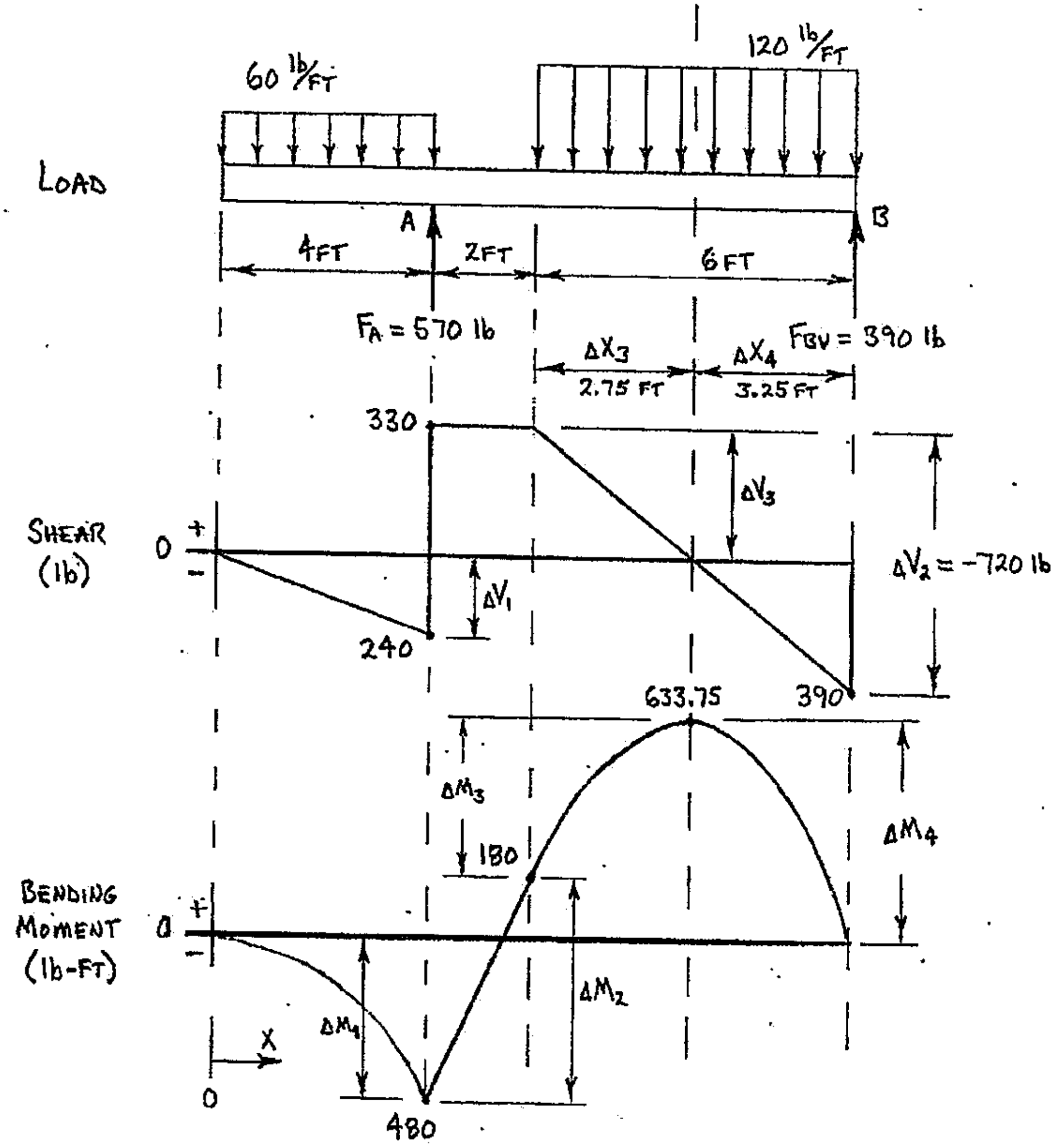

GENERAL COMMENTS ON DEVELOPING LOAD-SHEAR-BENDING MOMENT DIAGRAMS

Typically, a **complete** load-shear-bending moment diagram for Example 14-1 would be as shown in Figure 14-1 (page 14-1). The SYMBOLS for changes in shear (ΔV_1, ΔV_2 and ΔV_3) and bending moment (ΔM_1, ΔM_2, ΔM_3 and ΔM_4) seen in the diagrams above are normally NOT shown on the individual diagrams; they were shown here mainly to relate the explanation of the slope-area technique directly to the diagrams.

Note that any straight lines (curves with constant slope) were constructed using a straightedge; free-hand sketching should ONLY be done to construct "true" curves, such as those shown on the bending moment diagram over the interval x_0 to x_4, and the intervals Δx_3 and Δx_4.

Calculations were shown for all changes in value, and all values at inflection points, when developing the load-shear-bending moment diagram for Example 14-1. However, many of the calculations were simple enough to be done mentally (rather than "on paper") which would significantly decrease both the time and the physical space required to develop the load-shear-bending moment diagram. In fact, most students could mentally calculate everything required in Example 14-1 except Δx_3, ΔM_3 and ΔM_4.

The shear and bending moment diagrams in Example 14-1 were both developed starting from the left end and working left-to-right across the diagrams. However, it is important to note that since the shear and bending moment diagrams must have closure (must begin and end at zero), the diagrams could have been started from the right end and been developed working from right-to-left. Likewise, you could start a diagram from the left end, work part way across from left-to-right, and then go to the right end and develop the rest of the diagram from right-to-left. The slope-area method is NOT limited to developing diagrams only from left-to-right.

DESIGNER'S SIGN CONVENTION FOR EXTERNALLY APPLIED COUPLES

Externally applied couples (in the load diagram) produce an instantaneous response (an offset) in the bending moment diagram that is equal (in magnitude) to the applied couple. The offset in the bending moment diagram is directly below the point of application of the applied couple in the load diagram. The Designer's Sign Convention (Chapter 13, page 13-5) is used to determine the "sense" of the offset (whether the offset is toward positive, or toward negative). The term "externally applied couples" includes couples applied at any location on a structural member, as well as the reaction couple that develops at the support location of any cantilevered structural member.

The loading shown on the beam in Figure 14-6 (following page) includes applied couple C_1. To use the Designer's Sign Convention, a section is cut from the beam around the location of the applied couple (the dashed line in Figure 14-6 defines the section that will be removed from the beam). This section is then "cut" right at the point of application of the applied couple to form two smaller sections (a left section and a right section) which are shown together (see Figure 14-7, following page). The couple (C_1) is then applied on each of the two sections, **with its original GIVEN sense** and AT ITS ORIGINAL POINT OF APPLICATION. C_1 is now treated as an internal influence, since it has been placed at the cutting plane (an internal location) on both the left and right sections of the beam.

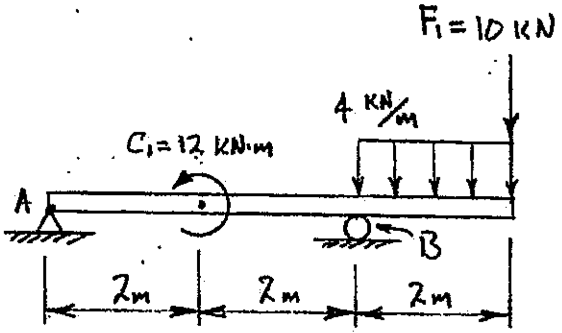

FIGURE 14-6 Overhanging beam loaded as shown

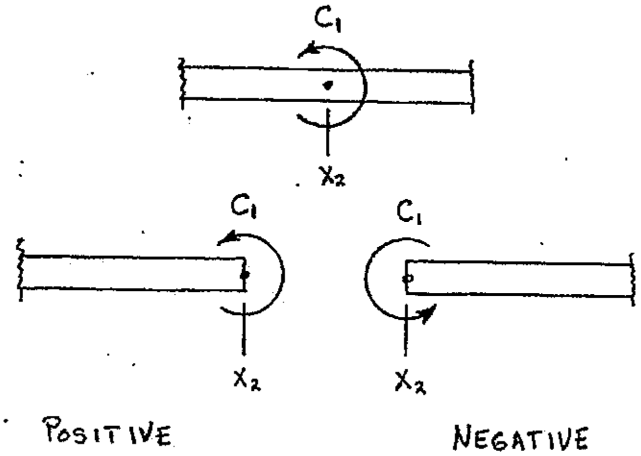

Figure 14-7 Sections developed at C_1's point of application (from Figure 14-6), for use with the Designer's Sign Convention

The Designer's Sign Convention states that a positive internal bending moment will compress the top fibers of a section and a negative internal bending moment will stretch the top fibers of a section. So, C_1 would be viewed as positive when applied on the left section, but negative when applied on the right section (Figure 14-7). So, the instantaneous response (the offset) of the moment diagram to the applied couple C_1 would be from positive to negative (toward negative) if the moment diagram is developed from left-to-right. Similarly, the instantaneous response (the offset) of the moment diagram to the applied couple C_1 would be from negative to positive (toward positive) if the moment diagram is developed from right-to-left.

Example 14-2 (following page) shows how the Designer's Sign Convention is applied during construction of a load-shear-bending moment diagram for a member that is subjected to an applied couple.

Example 14-2: Develop a complete load-shear-bending moment diagram for the overhanging beam loaded as shown below. The support reactions for the beam are: $F_{AH} = 0$, F_{AV} = 4-kN ↓, and F_B = 22-kN ↑.

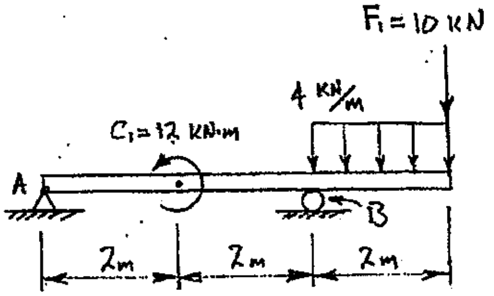

Complete load and shear diagrams, and a partial moment diagram are shown below. The shear diagram has an offset of 4-kN (negative) at x_0, due to reaction F_{AY}. The shear curve is then horizontal (zero slope) from X_0 to X_4 since the value of the load diagram is zero from x_0 to x_4 (the applied couple has no direct effect on the shear diagram). Reaction F_B then causes an immediate response (an offset) of 22-kN (positive) in the shear diagram; this is seen as the vertical line that extends from 4-kN (negative) to 18-kn (positive) at x_4. The 4 kN/m distributed load then causes the shear diagram to decrease linearly to 10-kN between x_4 and x_6. Applied force F_1 then causes an offset that returns the shear diagram to zero at x_6 (its right end). The first change in the bending moment diagram, from x_0 to x_2, is equal to the area of the shear diagram (8 kN-m, negative) over this same interval. Since the values on the shear curve are constant (4-kN, negative) from x_0 to x_2, the bending moment curve has constant negative slope over this same interval.

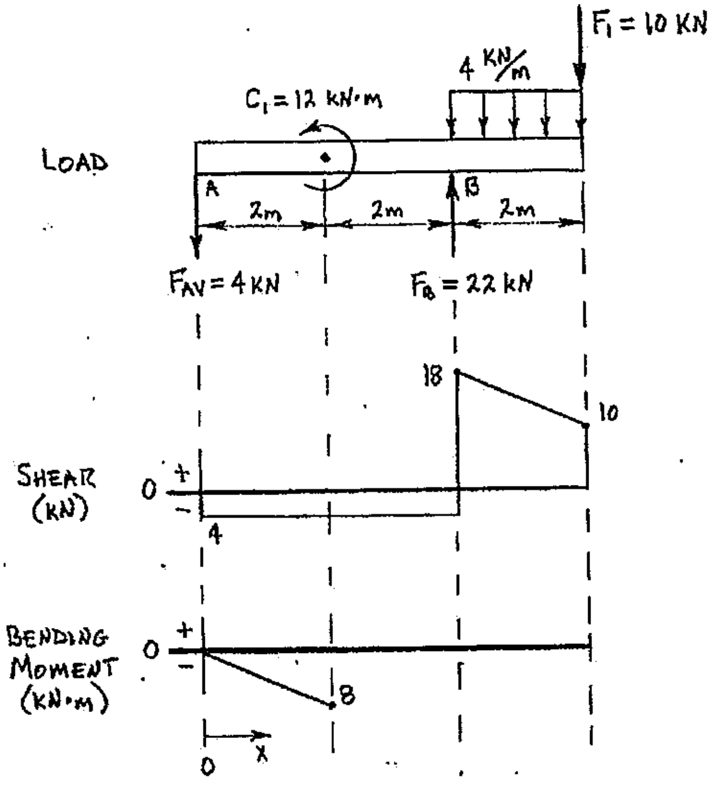

Example 14-2: (cont'd.)

At location x_2 on the moment diagram there will be an offset caused by the applied couple C_1. The offset will have a magnitude equal to C_1 (12 kN-m), and the "sense" of the offset will be determined using the Designer's Sign Convention and the diagram sketched just to the right of the moment diagram (see the partial load-shear-moment diagram shown below). Since the bending moment diagram is being developed working from left-to-right, the instantaneous response (the offset) at location x_2, caused by C_1, is **from positive to negative** (toward negative), as shown below. Note that the internal bending moment AT location x_2 is UNDEFINED; its value is 8 kN-m (negative) just to the left of x_2, and is 20 kN-m (negative) just to the right of x_2.

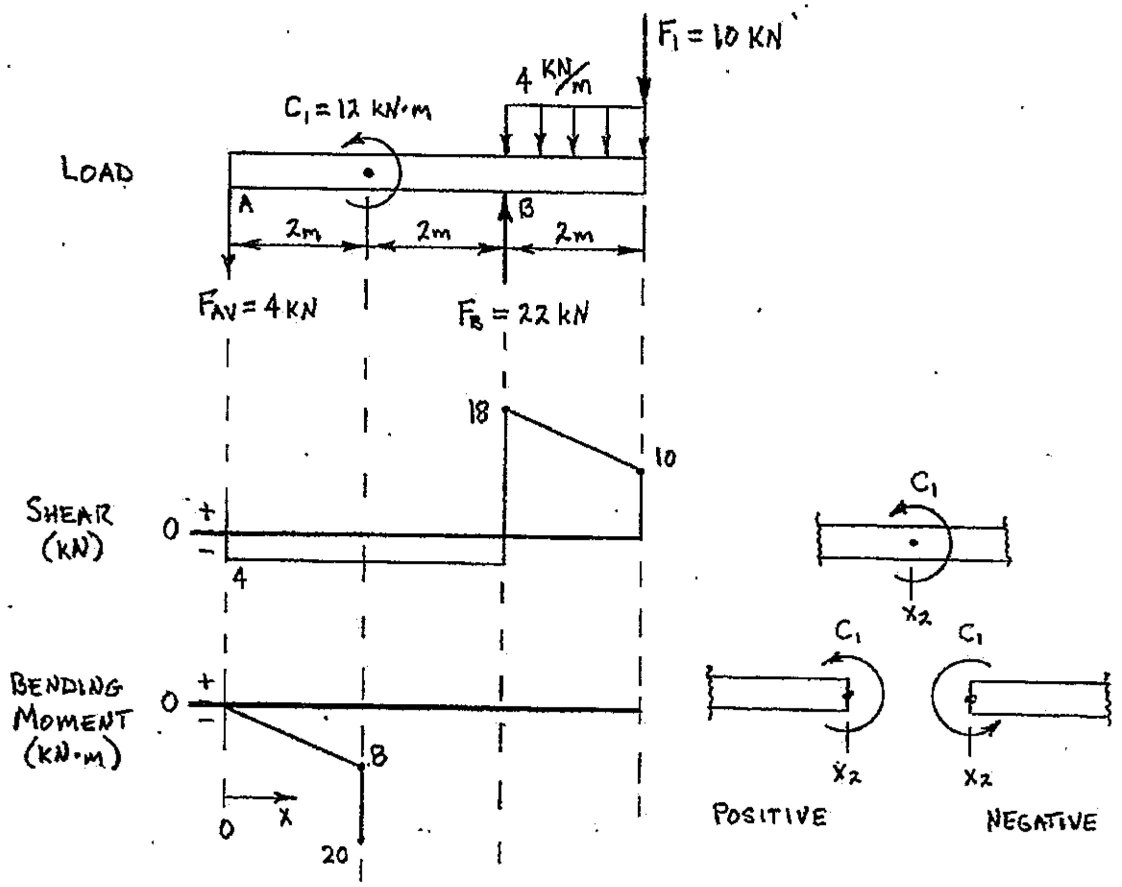

The bending moment diagram can now be completed. The CHANGE in the internal bending moment for the interval from x_2 to x_4 IS EQUAL TO THE AREA of the shear diagram (8 kN-m, negative) over the same interval (x_2 to x_4), which leads to an internal bending moment of M_4 = 28 kN-m (negative) at x_4. Since the value of the shear diagram is a constant 4-kN (negative) from x_2 to x_4, the slope of the bending moment diagram from x_2 to x_4 is negative and constant (a straight line with negative slope).

The change in the internal bending moment from x_4 to x_6 must return the bending moment curve to zero. The change in the bending moment from x_4 to x_6 is equal to the area of the shear diagram over the same interval (x_4 to x_6).

Example 14-2: (cont'd.)

The area of the shear diagram between x_4 and x_6 is a trapezoid, with base of 2-m and heights of 18-kN (positive) and 10-kN (positive). The trapezoid will be broken into two basic shapes, a rectangle with base of 2-m and height of 10-kN (positive), and a right triangle with base of 2-m and height of 8-kN (positive). The change in internal bending moment (ΔM_4) from x_4 to x_6 is then calculated as follows:

$$\Delta M_4 = \text{area above} = (\text{area of rectangle}) + (\text{area of triangle})$$

$$\Delta M_4 = (2\,\text{m})(+10\,\text{kN}) + \tfrac{1}{2}(2\,\text{m})(+8\,\text{kN})$$

$$\Delta M_4 = +28\,\text{kN-m}$$

The <u>SLOPE</u> of the bending moment diagram at a specific location is equal to the <u>VALUE</u> of the shear diagram, at that same location. At x_4, the value of the shear diagram is 18-kN (positive). Values on the shear diagram are positive but decrease from x_4 to x_6; at x_6 the value of the shear diagram is 10-kN (positive). So, the slope of the moment curve is 18-kN (positive) as it leaves location x_4. The bending moment's slope remains positive but decreases (becomes less steep) from x_4 to x_6, and then has a value of 10-kN (positive) at x_6. The complete load-shear-bending moment diagram is shown below:

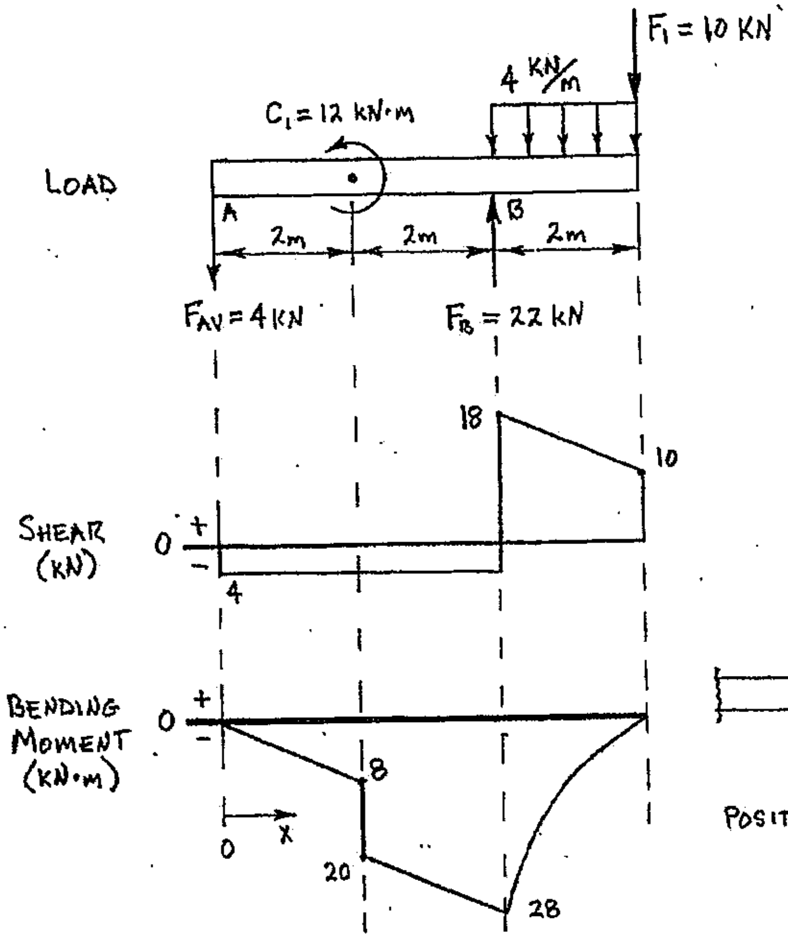

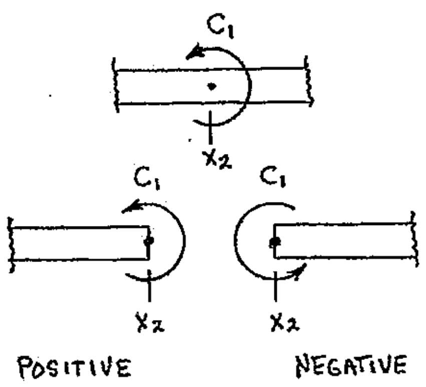

LINEARLY VARYING DISTRIBUTED LOADS

The beam shown in Figure 14-8 supports a linearly varying distributed load. The distributed load decreases at a constant rate (25 lb/ft) from a maximum of 300 lb/ft at the left end of the beam to zero (0) at the right end of the beam. All of the procedures outlined earlier in this chapter apply when constructing a load-shear-bending moment diagram of a structural member that experiences a linearly varying distributed load. However, there are several construction and calculation techniques that are unique to linearly varying distributed loads.

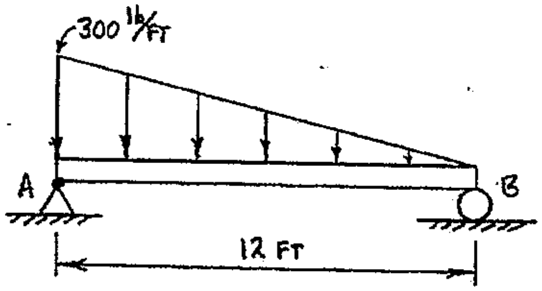

FIGURE 14-8 Simply-supported beam with a linearly varying distributed load

The four curves shown in Figure 14-9 are typical of those developed when constructing load-shear-bending moment diagrams. The uppermost curve (the horizontal line) is a zero order curve. Under the zero order curve is a 1st order curve (a curve with constant non-zero slope), and the curves continue to increase in order as you move down through the diagram.

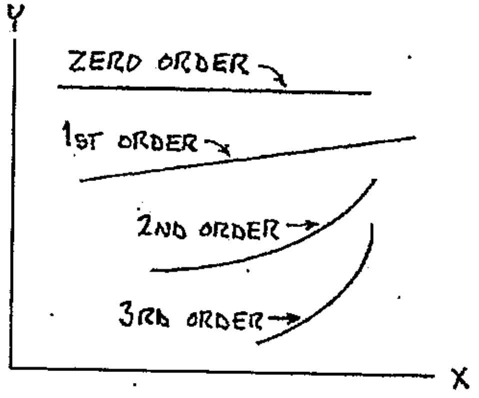

zero order: $y = bx^0$

1st order: $y = mx + b$

2nd order: $y = ax^2 + bx + c$

3rd order: $y = ax^3 + bx^2 + cx + d$

Figure 14-9 Zero through third order curves

A similar pattern develops as you construct a load-shear-bending moment diagram; a zero order curve over a specific interval in the load diagram leads to a 1st order curve in the shear diagram and a 2nd order curve in the bending moment diagram, over the same interval. A 1st order curve in the load diagram over a specific interval leads to a 2nd order curve in the shear diagram and a third order curve in the bending moment diagram, over the same interval. The increasing order of curves that develops while moving downward through the diagram is seen in Figure 14-10 (following page).

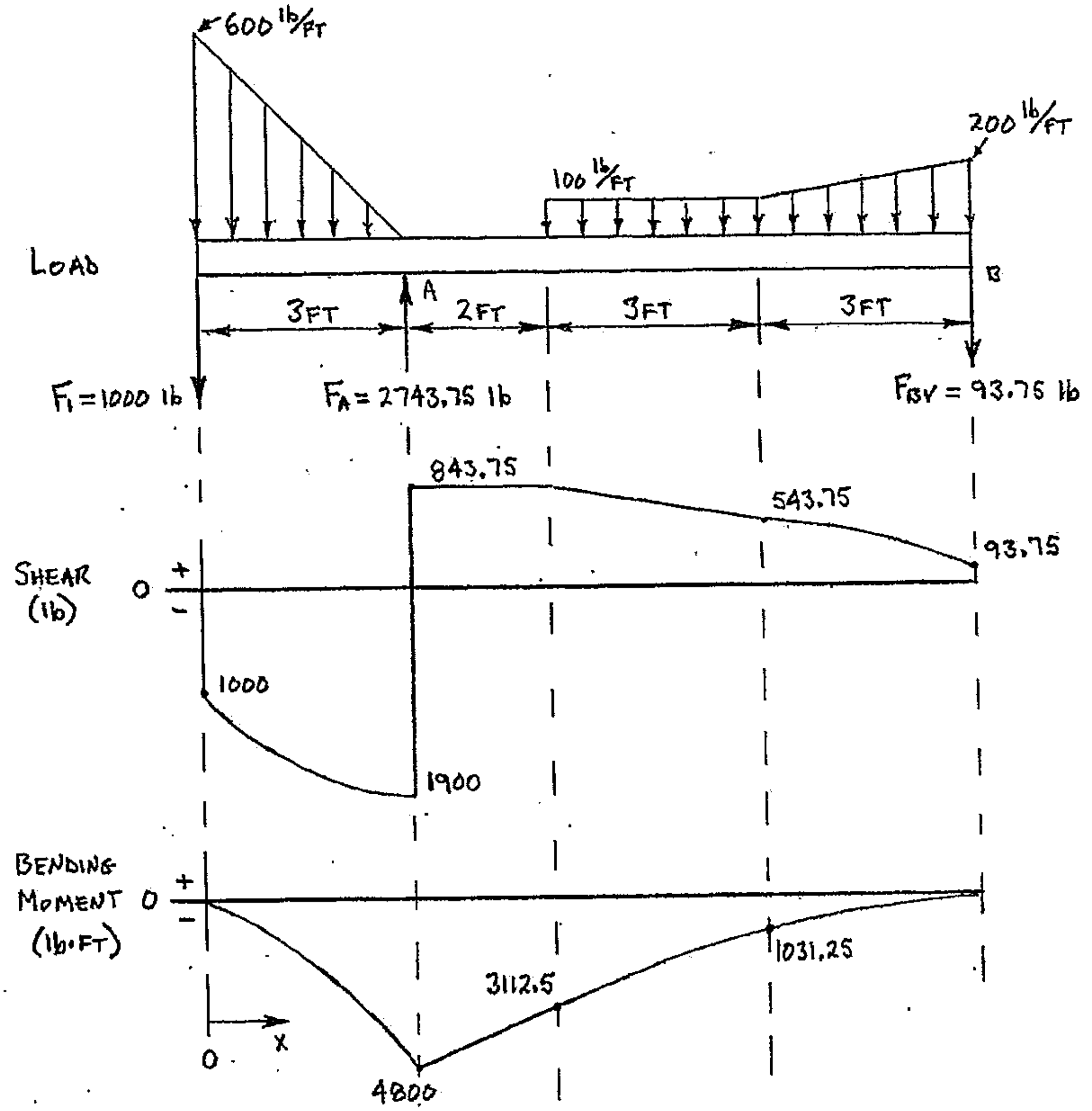

FIGURE 14-10 Load-shear-bending moment diagram for an overhanging beam

In the diagram above, from x_0 to x_3, the 1st order curve in the load diagram leads to a 2nd order curve in the shear diagram and a 3rd order curve in the bending moment diagram, over the same interval. There is zero (0) load in the load diagram from x_3 to x_5; this leads to a zero order curve in the shear diagram and a 1st order curve in the bending moment diagram, over the interval from x_3 to x_5. From x_5 to x_8, the zero order curve in the load diagram leads to a 1st order curve in the shear diagram and a 2nd order curve in the bending moment diagram, over the same interval. Finally, for the interval from x_8 to x_{11}, the 1st order curve in the load diagram leads to a 2nd order curve in the shear diagram and a 3rd order curve in the bending moment diagram (from x_8 to x_{11}).

Calculations have been shown (in previous examples) that determine the area between either a zero order curve or a first order curve and the zero axis, over a specific interval. The area between a zero order curve and the zero axis in a shear or bending moment diagram is rectangular. The area between a first order curve and the zero axis in a shear or bending moment diagram is triangular (if the value at one end of the curve is zero) or trapezoidal (if the values at both ends of the curve are non-zero). To this point, all area calculations have been for areas that were rectangular, triangular or both (a trapezoidal area can be broken into two elementary shapes, a triangle and a rectangle).

Care must be taken when calculating areas that are bounded by second order curves. A <u>SPECIAL CASE</u> exists when one end of a second order curve has **zero** slope, such as the curve shown in Figure 14-11A. If a rectangle is constructed around the curve such that the curve becomes the rectangle's "diagonal" (the curve intersects diagonal corners of the rectangle), then the areas between the curve and the upper and lower boundaries of the rectangle are calculated using the equations shown on the diagram in Figure 14-11B.

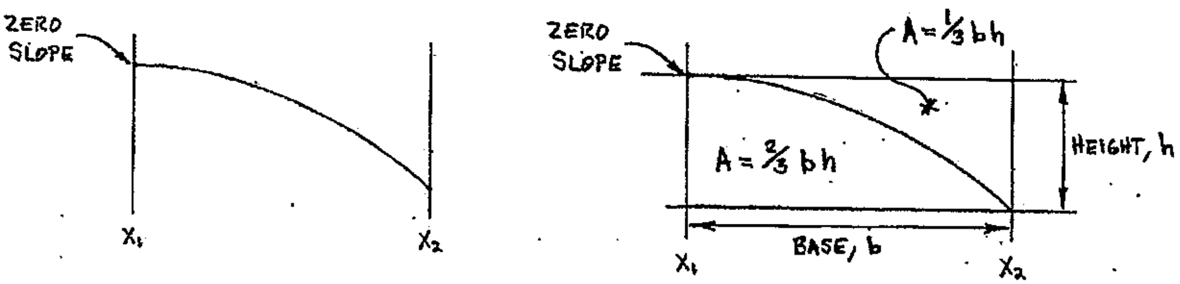

diagram A   diagram B

FIGURE 14-11 A) 2nd order curve over the interval from x_1 to x_2.
B) Equations used to calculate the areas between the curve and the upper and lower boundaries of a rectangle.

Remember, when constructing load-shear-bending moment diagrams the area between a curve and the zero axis over a specific interval is equal to the change in value of the diagram directly below (over the same interval). When constructing a rectangular box around a second order curve, for the special case where a second order curve has zero slope at one end of an interval, the "zero slope" point on the curve could be in any one of the four corners of the rectangle.

Figure 14-12 (following page) shows the two possibilities that exist for the second order curve shown in Figure 14-11. In diagram A, the curve is ABOVE the zero axis and the area (shaded) <u>between</u> the curve and the zero axis is calculated using the following equation: $A = ⅔bh$. In diagram B the curve is BELOW the zero axis, so the area <u>between</u> the curve and the zero axis is calculated using the equation: $A = ⅓bh$. Care must be taken to use the correct area equation for the special case of second order curves with zero slope at one end of the curve.

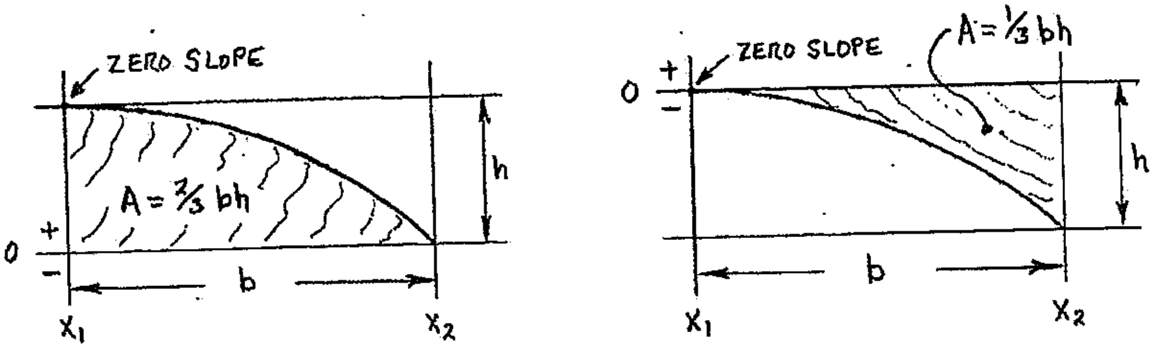

diagram A diagram B

FIGURE 14-12 A) 2nd order curve above the zero axis; zero slope at x_1
b) 2nd order curve below the zero axis; zero slope at x_1

Example 14-3 A simply-supported beam is loaded as shown below. The support reactions are: F_{AH} = 0, F_{AV} = 1200-lb ↑ and F_B = 600-lb ↑. Construct a complete load-shear-bending moment diagram of the beam.

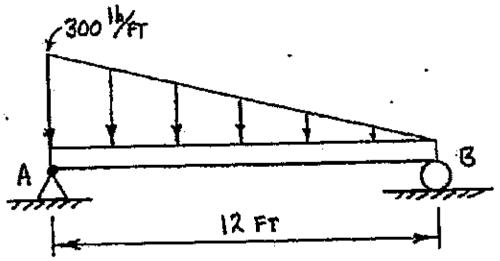

A partial load-shear-bending moment diagram for the beam is shown below:

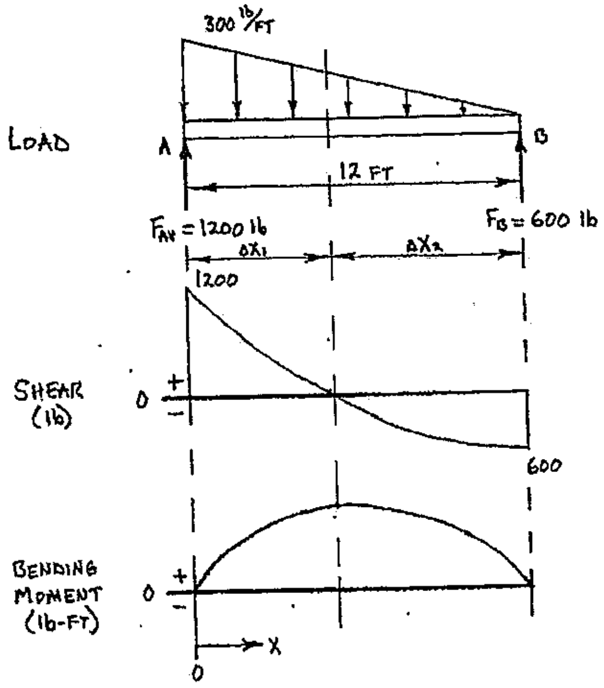

Example 14-3: (cont'd.)

The only items missing from the load-shear-bending moment diagram shown on the previous page are the values of Δx_1 and Δx_2 required to locate the point of zero internal shear force (and the corresponding location of the maximum internal bending moment), and the value of the maximum internal bending moment. The complete shear and bending moment curves were constructed based on the procedure outlined earlier in this chapter. A description of the construction of the diagrams, and methods to complete the diagrams are shown on the following pages.

To construct the shear diagram, the reaction F_{AV} caused an immediate offset of 1200-lb (positive) at x_0 (x = 0-ft). The change in the internal shear force (ΔV) from x_0 to x_{12} (from the left end to the right end of the beam) was equal to the area of the load diagram over the same interval (x_0 to x_{12}). The area of the load diagram from X_0 to x_{12} was 1800-lb (negative), which means that the internal shear force changes from 1200-lb (positive) at x_0 to 600-lb (negative) at x_{12}. The value of the load diagram is 300-lb/ft (negative) at x_0; the negative load values then decrease when moving from left-to-right across the beam and at x_{12} the load is equal to zero (0). So, the shear curve drawn from x_0 to x_{12} has a slope of 300-lb/ft (negative) at x_0, its slope decreases (becomes less steep) from left-to-right, and then becomes zero (horizontal) at x_{12}. Support reaction F_B = 600-lb (positive) at the right end of the beam (at x_{12}) then returns the shear curve to zero (the shear diagram has closure).

Since the shear curve crossed its zero axis, a dashed line was drawn through all three diagrams at that location, and in the bending moment diagram the location represents a local maximum bending moment. The location of zero internal shear force was defined from the left end of the beam by the (currently unknown) length Δx_1, and from the right end of the beam by length Δx_2 (again, currently unknown).

The bending moment diagram must also have closure (begins and ends at zero). To construct the bending moment curve from x_0 to the end of interval Δx_1, observe the change in value of the shear diagram over this same interval. At x_0, the shear diagram has a value of 1200-lb (positive). Values on the shear diagram are positive but decrease moving from left to right, until the shear diagram has a value of zero (0) at the end of interval Δx_1. So, the bending moment diagram has a slope of 1200-lb (positive) at x_0, its slope remains positive but decreases (becomes less steep) moving from left-to-right and then its slope is zero (0) at the end of interval Δx_1.

To construct the bending moment curve from the beginning of Δx_2 to x_{12}, again observe the change in the shear diagram over this same interval. At the beginning of interval Δx_2, the shear diagram has a value of zero (0). Values on the shear diagram then are negative and increase from left-to-right, and the shear diagram has a value of 600-lb (negative) as its curve arrives at x_{12}. So, the bending moment diagram has a slope of zero (0) at the beginning of interval Δx_2, and its slope is then negative and increases (becomes steeper) moving from left-to-right. Finally, the slope of the bending moment diagram is 600-lb (negative) at x_{12}.

Example 14-3: (cont'd.)

The change in the bending moment diagram over the interval Δx_1 is equal to the area of the shear diagram over the same interval. The change in the bending moment over the interval Δx_2 is equal to the area of the shear diagram over the interval Δx_2. The shear curve has a non-zero slope at both the beginning and end of interval $\Delta x1$, and at this point no methods have been shown to calculate the area under a second order curve of this type. However, the shear curve DOES have zero slope at the right end of interval Δx_2 (at x_{12}). So, it will be necessary to calculate the length of interval Δx_2 (and Δx_1) and the value of the internal bending moment at the beginning of Δx_2 by working from the right end of the beam towards the left.

Partial load-shear-bending moment diagram of the beam:

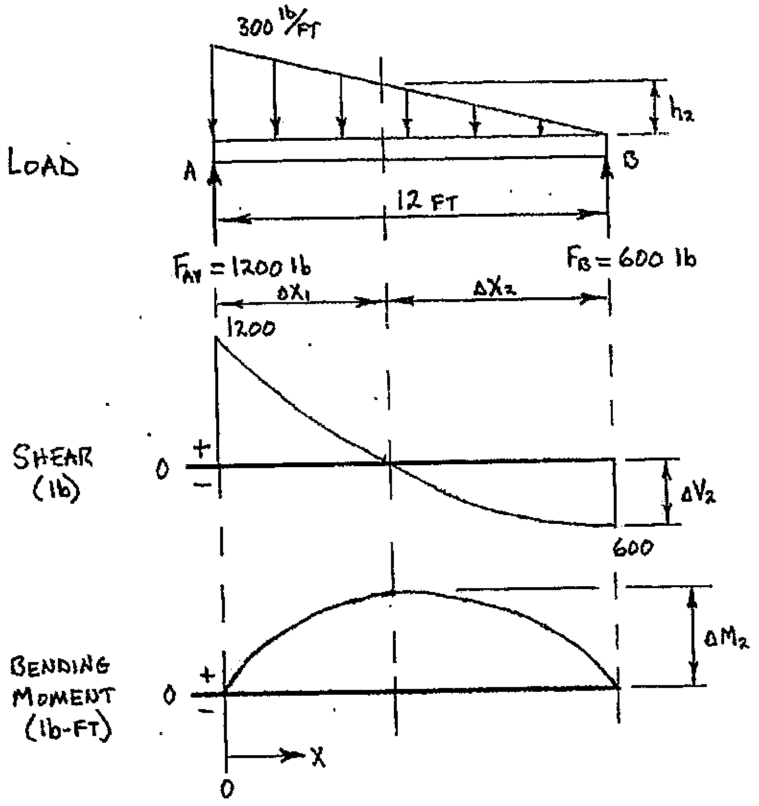

To determine the unknown length Δx_2, first establish a relationship between h_2 and Δx_2 using similar triangles found in the load diagram shown above:

$$\frac{h_2}{\Delta x_2} = \frac{-300\,{}^{lb}\!/_{ft}}{12\text{ ft}}$$

$$h_2 = \left(\frac{-300\,{}^{lb}\!/_{ft}}{12\text{ ft}}\right)\Delta x_2$$

$$\underline{\underline{h_2 = \left(-25\,{}^{lb}\!/_{ft^2}\right)\Delta x_2}}$$

Example 14-3: (cont'd.)

The change in shear (ΔV_2) over the interval Δx_2 is equal to the area of the load diagram over the same interval (see partial load-shear-bending moment diagram on previous page); this relationship can be used to determine Δx_2.

$$\Delta V_2 = \text{area above, over interval } \Delta x_2$$
$$\Delta V_2 = \tfrac{1}{2}(\text{base})(\text{height})$$
$$\Delta V_2 = \tfrac{1}{2}(\Delta x_2)(h_2) \qquad \underline{\text{and}}: \; h_2 = \left(-25\,\text{lb}/\text{ft}^2\right)\Delta x_2$$
$$\Delta V_2 = \tfrac{1}{2}(\Delta x_2)\left(-25\,\text{lb}/\text{ft}^2\right)\Delta x_2$$
$$\Delta V_2 = \left(-12.5\,\text{lb}/\text{ft}^2\right)(\Delta x_2)^2$$
$$(\Delta x_2)^2 = \frac{\Delta V_2}{-12.5\,\text{lb}/\text{ft}^2}$$
$$\Delta x_2 = \sqrt{\frac{\Delta V_2}{-12.5\,\text{lb}/\text{ft}^2}} \qquad \underline{\text{and}}: \; \Delta V_2 = -600\text{ lb}$$
$$\Delta x_2 = \sqrt{\frac{-600\text{ lb}}{-12.5\,\text{lb}/\text{ft}^2}}$$
$$\Delta x_2 = \underline{\underline{6.92820\text{ ft}}}$$

The unknown length Δx_1 can now be found:

$$\Delta x_1 = 12\text{ ft} - \Delta x_2$$
$$\Delta x_1 = 12\text{ ft} - 6.92820\text{ ft}$$
$$\Delta x_1 = \underline{\underline{5.07180\text{ ft}}}$$

The maximum internal bending moment is located at x = 5.0718-ft and is positive. The magnitude of the change in bending moment (ΔM_2) over interval Δx_2 must be equal to the value of the maximum internal bending moment, since ΔM_2 must return the bending moment diagram to zero. ΔM_2 is equal to the area between the shear curve and the zero axis of the shear diagram, over the interval Δx_2. The area of the shear diagram over interval Δx_2 is the area between a 2nd order curve and the zero axis, and the 2nd order shear curve has ZERO SLOPE at x_{12}. So, the area will be calculated using the equation: A = ⅔(base)(height), as shown on the following page.

Example 14-3: (cont'd.)

The change in bending moment over the interval Δx_2 is determined as follows:

$$\Delta M_2 = \text{area above in shear diagram, over interval } \Delta x_2$$
$$\Delta M_2 = \tfrac{2}{3}(\text{base})(\text{height})$$
$$\Delta M_2 = \tfrac{2}{3}(\Delta x_2)(-600\text{ lb})$$
$$\Delta M_2 = \tfrac{2}{3}(6.9282\text{ ft})(-600\text{ lb})$$
$$\Delta M_2 = \underline{\underline{-2771.28\text{ lb-ft}}}$$

The maximum internal bending moment (M_{MAX}) at x = 5.0718-ft can be determined as shown below, since the internal bending moment must be equal to zero at x_{12} (the bending moment diagram must have closure; the bending moment curve must return to zero at x = 12-ft).

$$M_{12} = M_{MAX} + \Delta M_2$$
$$M_{MAX} = M_{12} - \Delta M_2 \qquad \underline{\text{and}}: \quad M_{12} = 0$$
$$M_{MAX} = 0 - (-2771.28\text{ lb-ft})$$
$$M_{MAX} = +2771.28\text{ lb-ft}$$
$$M_{MAX} = \underline{\underline{2771.28\text{ lb-ft} \quad (\text{positive})}} \quad @ \quad x = 5.0718\text{ ft}$$

The complete load-shear-bending moment diagram of the beam is shown on the following page.

Example 14-3: (cont'd.)

COMPLETE LOAD-SHEAR-BENDING MOMENT DIAGRAM FOR EXAMPLE 14-3:

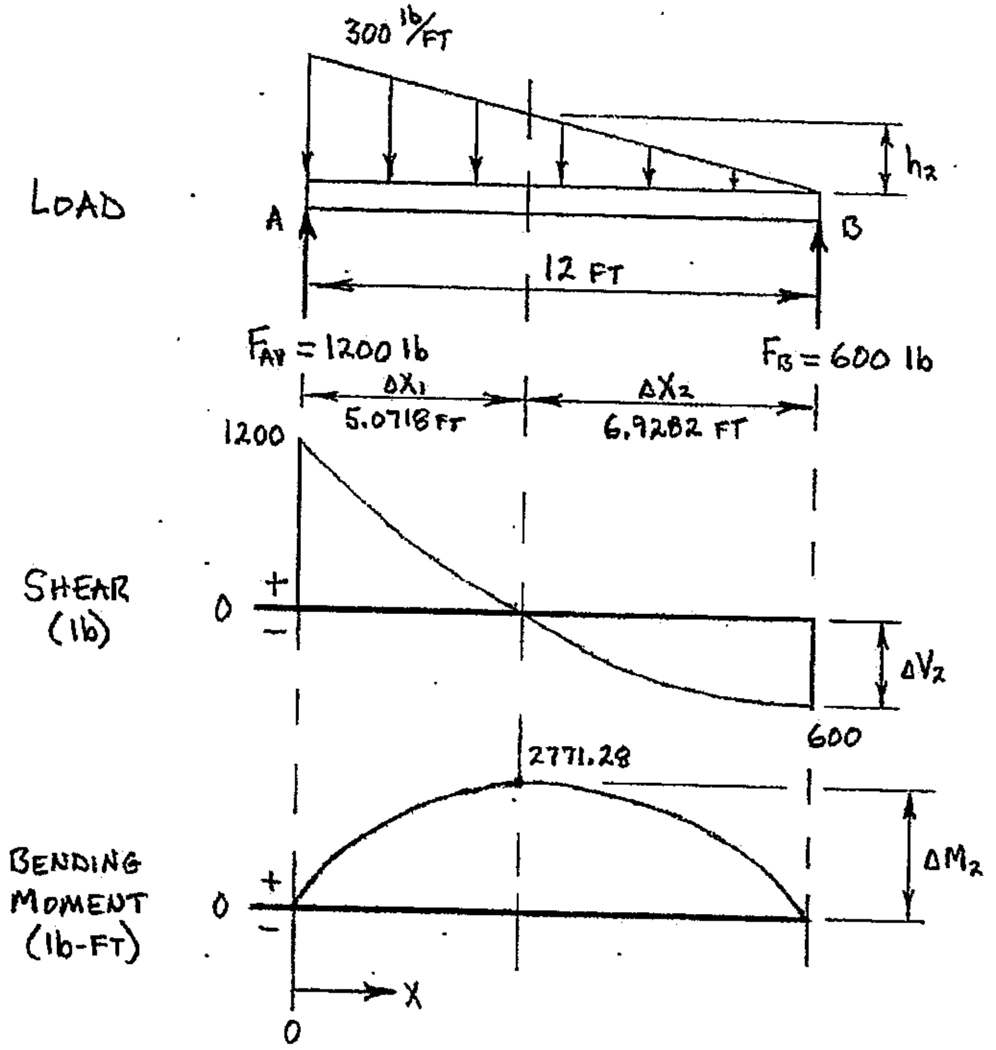

The load-shear-bending moment diagram shown above would be considered a "complete" diagram since all curves have been constructed and all inflection point values are shown on the diagram. However, the change in bending moment (ΔM_1) over the interval Δx_1 was never determined because a method to calculate this area has not yet been established. A method to determine the area bounded by a 2nd order curve that has NON-ZERO slope at both ends of the curve (such as the shear curve over interval Δx_1) is developed over the next several pages. This method is then used to confirm previous values calculated during the solution of Example 14-3.

Example 14-3: (cont'd.)

The value of the maximum bending moment, M_{MAX} = 2771.28 lb-ft (positive), can be confirmed by calculating the change in the bending moment (ΔM_1) over the interval Δx_1, since ΔM_1 and ΔM_2 must have equal magnitude but opposite sign (ΔM_1 = +, ΔM_2 = -). The change in bending moment ΔM_1 is equal to the area of the shear diagram over the interval Δx_1, which is the area under a 2nd order curve that does NOT have zero slope at either end of the interval Δx_1.

The 2nd order shear curve over the interval Δx_1 is shown in Figure 14-13A, and will be used to demonstrate a method to determine areas bounded by a 2nd order curve with non-zero slope at each end of the curve. First, construct a rectangle around the curve such that the curve becomes the rectangle's "diagonal" (see Figure 14-13B).

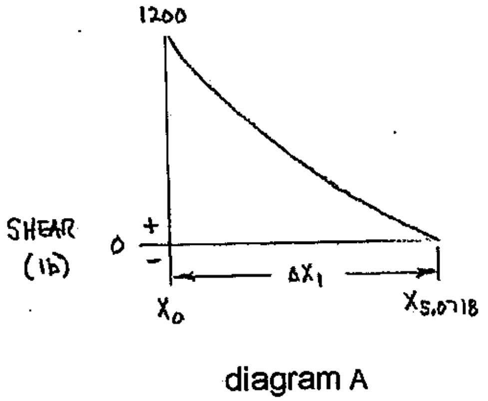

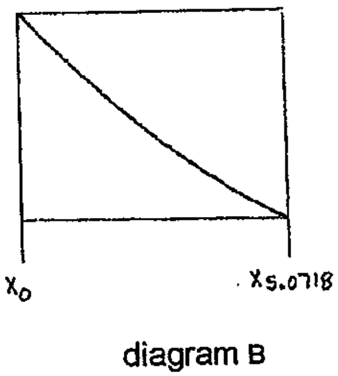

FIGURE 14-13 A) 2nd order shear curve over the interval Δx_1
B) 2nd order shear curve enclosed in a rectangular box

Next draw a line tangent to one end of the 2nd order curve that will also divide one of the vertical legs of the rectangle (see Figure 14-14). In this case, the line must be drawn tangent to the right end of the curve (at $x_{5.0718}$). A second line is now drawn parallel to the tangent line such that it also intersects the opposite end of the curve; the two parallel lines enclose the 2nd order curve in a parallelogram. Equations for the two areas within the parallelogram are shown in Figure 14-14. Note that the base (b) is ALWAYS measured horizontally, and the height (h) is ALWAYS measured vertically.

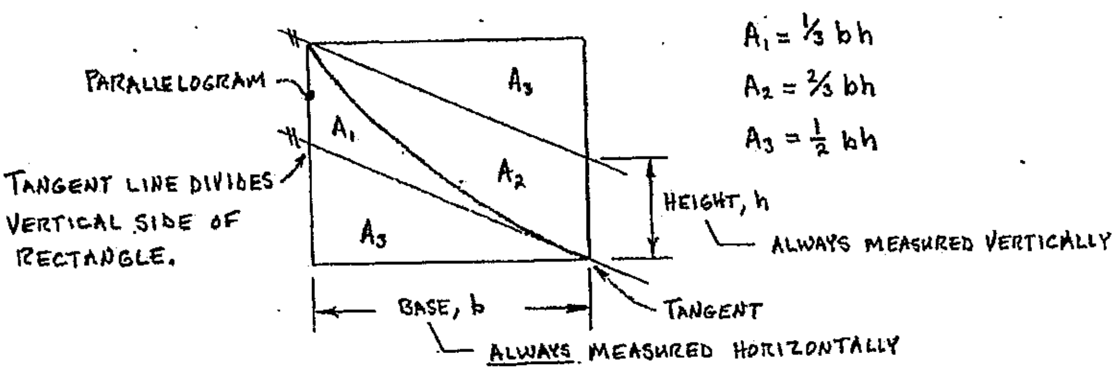

FIGURE 14-14 Parallelogram constructed about the 2nd order curve

Example 14-3: (cont'd.)

Several items have been added to the load-shear-bending moment diagram shown below. The area of the trapezoidal distributed load over the interval Δx_1 would cause a change in shear, ΔV_1 = -1200-lb, over that same interval. The trapezoidal load is divided into two elementary shapes; a triangle with height of h_1 and a rectangle with height of h_2 (both have a base of Δx_1). The area of the rectangle is equal to the change in shear ΔVh_2, while the triangular area is equal to the change in shear ΔVh_1. The straight line that defines ΔVh_1 and ΔVh_2 (at x_0) is tangent to the 2nd order shear curve at $x_{5.0718}$, and has a slope equal to the value of h_2 from the load diagram.

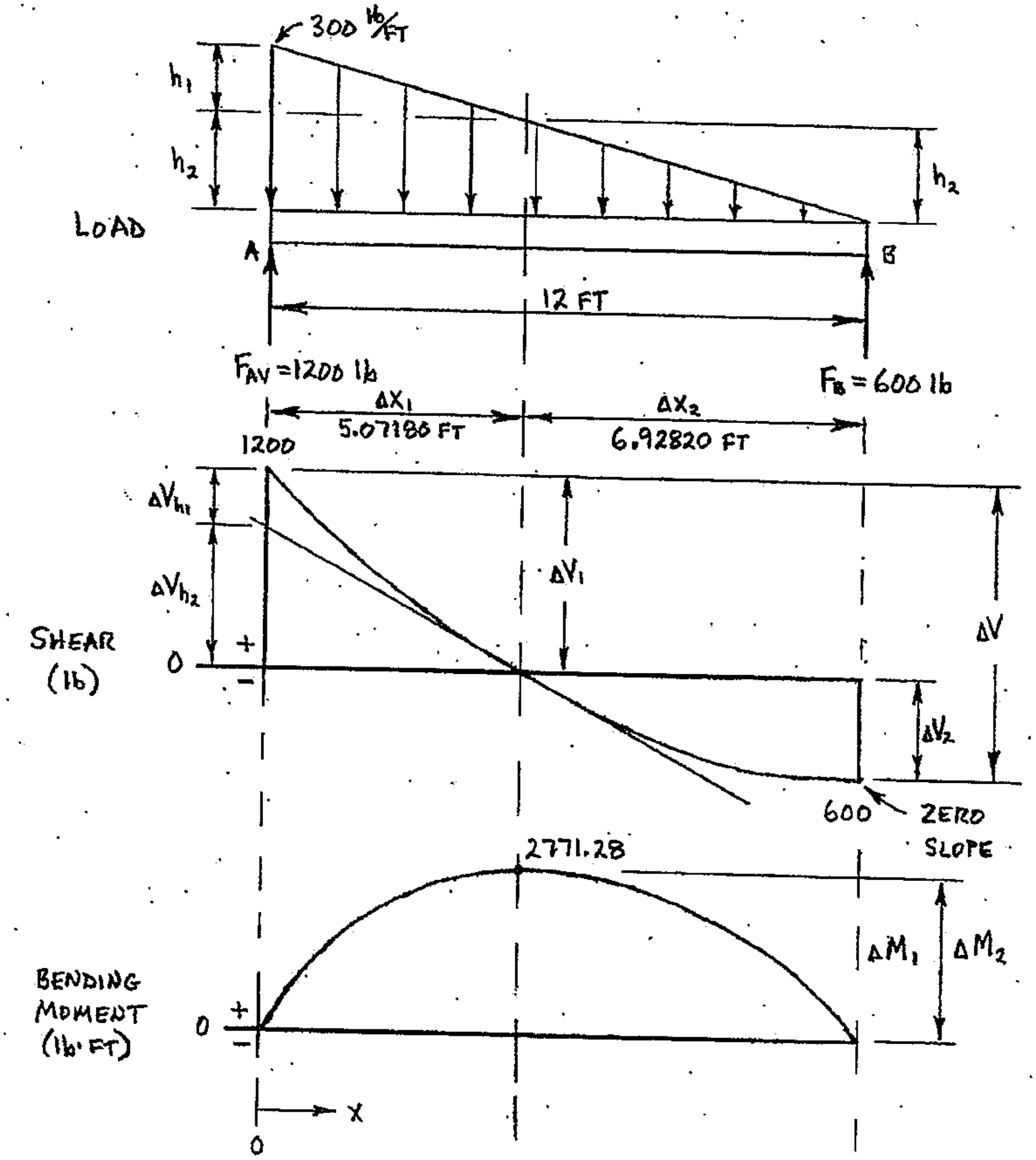

Example 14-3: (cont'd.)

A value for h_2 can now be found since a relationship between h_2 and Δx_2 was established earlier (page 14-35):

$$h_2 = \left(-25\,{}^{lb}\!/\!_{ft^2}\right)\Delta x_2 \qquad \underline{\text{and}}: \quad \Delta x_2 = 6.92820\text{ ft}$$

$$h_2 = \left(-25\,{}^{lb}\!/\!_{ft^2}\right)(6.92820\text{ ft})$$

$$h_2 = \underline{\underline{-173.205\,{}^{lb}\!/\!_{ft}}}$$

h_1 can now be determined using the relationship shown below, as developed from the load-shear-bending moment diagram shown on the previous page:

$$h_1 + h_2 = -300\,{}^{lb}\!/\!_{ft}$$

$$h_1 = -300\,{}^{lb}\!/\!_{ft} - h_2 \qquad \underline{\text{and}}: \quad h_2 = -173.205\,{}^{lb}\!/\!_{ft}$$

$$h_1 = -300\,{}^{lb}\!/\!_{ft} - \left(-173.205\,{}^{lb}\!/\!_{ft}\right)$$

$$h_1 = \underline{\underline{-126.795\,{}^{lb}\!/\!_{ft}}}$$

The change in shear ΔVh_2 over the interval Δx_1 is equal to the area of the rectangle in the load diagram with base ofΔx_1 and height of h_2:

$$\Delta Vh_2 = \text{ rectangular area in load diagram over interval } \Delta x_1$$

$$\Delta Vh_2 = (\Delta x_1)(h_2)$$

$$\Delta Vh_2 = (5.0718\text{ ft})\left(-173.205\,{}^{lb}\!/\!_{ft}\right)$$

$$\Delta Vh_2 = \underline{\underline{-878.461\text{ lb}}}$$

The change in shear ΔVh_1 over the interval Δx_1 is equal to the area of the triangle in the load diagram with base of Δx_1 and height of h_1:

$$\Delta Vh_1 = \text{ triangular area in load diagram over the interval } \Delta x_1$$

$$\Delta Vh_1 = {}^1\!/\!_2(\Delta x_1)(h_1)$$

$$\Delta Vh_1 = {}^1\!/\!_2(5.0718\text{ ft})\left(-126.795\,{}^{lb}\!/\!_{ft}\right)$$

$$\Delta Vh_1 = \underline{\underline{-321.539\text{ lb}}}$$

__NOTE:__ ΔVh_1 could also be calculated from: $\Delta V_1 = \Delta Vh_1 + \Delta Vh_2$

Example 14-3: (cont'd.)

The change in the bending moment diagram (ΔM_1) over the interval Δx_1 is equal to the area in the shear diagram between the 2nd order curve and the zero axis, over the same interval (Δx_1). The interval Δx_1 from the shear diagram is shown below:

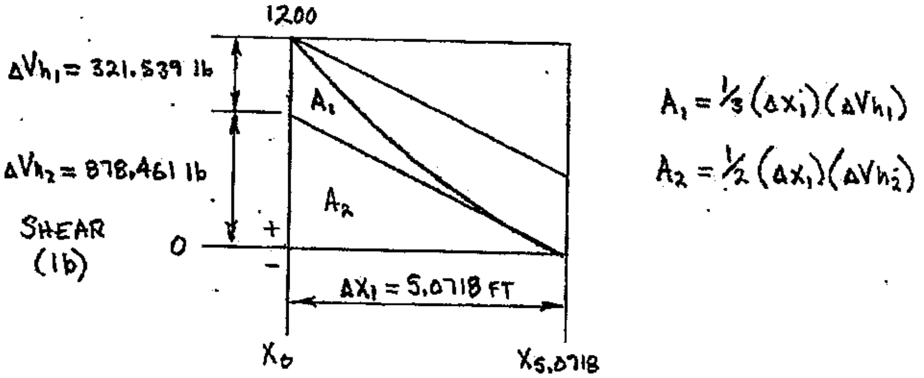

The change in bending moment ΔM_1 can now be determined as shown below:

$$\Delta M_1 = \text{area above in shear diagram, over the interval } \Delta x_1$$
$$\Delta M_1 = A_1 + A_2$$
$$\Delta M_1 = \tfrac{1}{3}(\Delta x_1)(\Delta Vh_1) + \tfrac{1}{2}(\Delta x_1)(\Delta Vh_2)$$
$$\Delta M_1 = \tfrac{1}{3}(5.0718\text{ ft})(+321.539\text{ lb}) + \tfrac{1}{2}(5.0718\text{ ft})(+878.461\text{ lb})$$
$$\Delta M_1 = \underline{\underline{+2771.28\text{ lb-ft}}}$$

<u>So</u>: The magnitude of ΔM_1 = 2771.28 lb-ft = the magnitude of ΔM_2 (from page 14-37), which confirms the value of the maximum bending moment determined on page 14-37 and shown on the complete load-shear-bending moment diagram seen on page 14-38.

<u>SUMMARY</u>

Load-shear-bending moment diagrams are an efficient method to determine both magnitude and mode of the maximum internal shear force and internal bending moment, along with the locations of these values and the locations where internal loads are equal to zero. Load-shear-bending moment diagrams can also be used to find the internal shear force and/or internal bending moment at any location along a structural member.

A procedure for constructing load-shear-bending moment diagrams using the slope-area method was presented, along with several examples of typical diagrams. The slope-area method combines graphical/sketching techniques with area calculations to develop the curves on the shear and bending moment diagrams as well as the values of shear and bending moment at specific locations on the curves.

FURTHER EXAMPLE PROBLEMS (solutions in GFSA format begin on page 14-45)

Example 14-4: An overhanging beam is loaded as shown below. The support reactions are: $F_{AH} = 0$, $F_{AV} = 10$-kN ↓ and $F_B = 40$-kN ↑. Construct a COMPLETE load-shear-bending moment diagram of the beam.

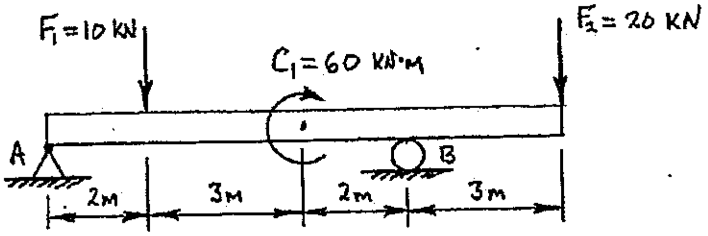

Example 14-5: A simply-supported beam is loaded as shown below. Construct a COMPLETE load-shear-bending moment diagram of the beam.

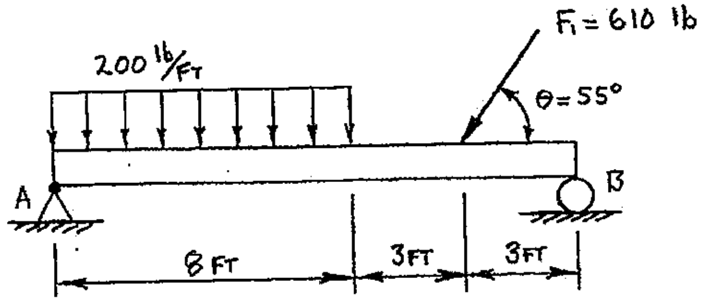

Example 14-6: A cantilever beam is loaded as shown below. The beam's support reactions are: $F_{AH} = 0$, $F_{AV} = 9$-kN ↑ and $C_A = 34$ kN-m ↻. Construct a COMPLETE load-shear-bending moment diagram of the beam.

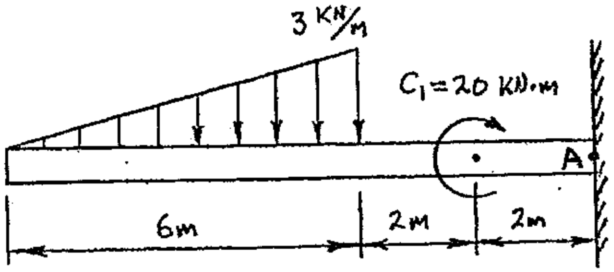

<u>FURTHER EXAMPLE PROBLEMS</u> (solutions in GFSA format are on the following pages)

Example 14-7: A cantilever beam is loaded as shown below. The support reactions for the beam are: $F_{AH} = 0$, $F_{AV} = 310$-lb ↑ and $C_A = 360$ lb-ft ↺. Construct a <u>COMPLETE</u> load-shear-bending moment diagram of the beam.

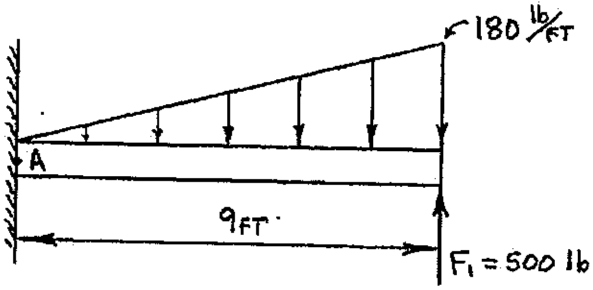

Example 14-8: An overhanging beam is loaded as shown below. The support reactions are: $F_A = 2298.483$-lb ↑, $F_{DH} = 173.273$-lb → and $F_{DV} = 76.897$-lb↓. The vertical component of applied force F_2 is: $F_{2V} = 371.586$-lb ↓. Construct a <u>COMPLETE</u> load-shear-bending moment diagram for the beam. Then, using the diagram, determine the magnitude and mode of the internal shear force and the internal bending moment at locations B and C. (<u>NOTE</u>: This is the same beam used in Example 13-1, beginning on page 13-7. Compare the answers from this example to those found in Example 13-1, page 13-13.)

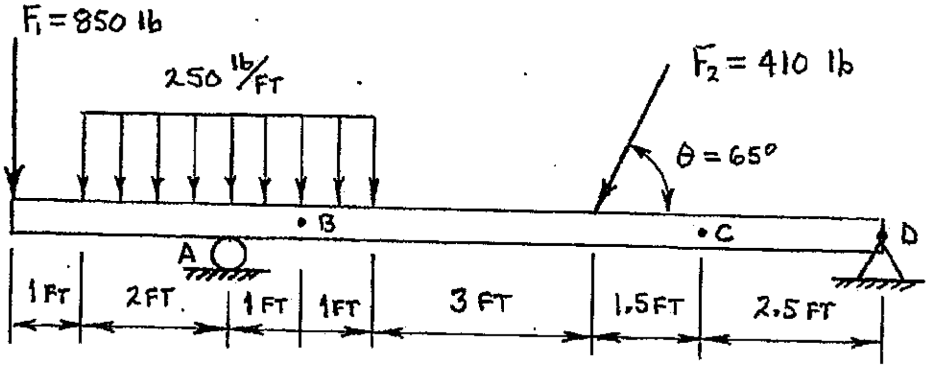

PROBLEM: EXAMPLE 14-4

GIVEN: AN OVERHANGING BEAM IS LOADED AS SHOWN BELOW. THE SUPPORT REACTIONS ARE: $F_{AH} = 0$, $F_{AV} = 10$ kN ↓ AND $F_B = 40$ kN ↑.

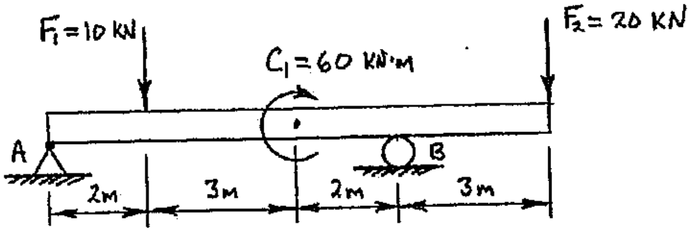

FIND: CONSTRUCT A COMPLETE LOAD-SHEAR-BENDING MOMENT DIAGRAM OF THE BEAM.

SOLUTION:

LOAD-SHEAR-BENDING MOMENT DIAGRAM:

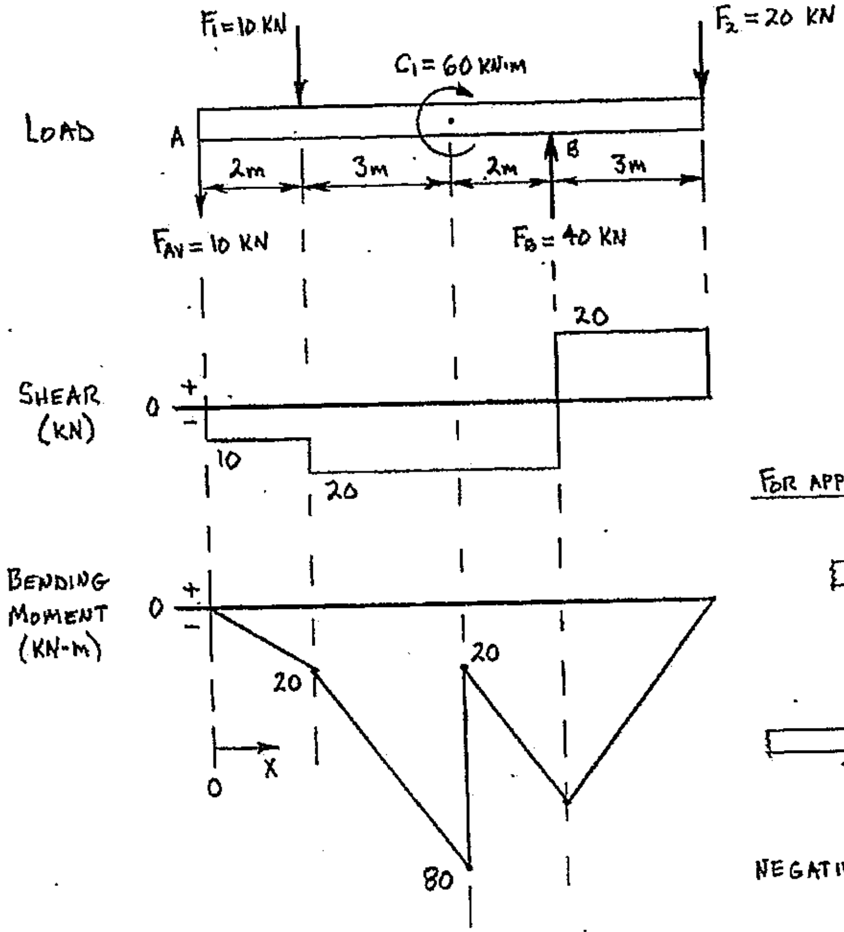

FOR APPLIED COUPLE C_1:

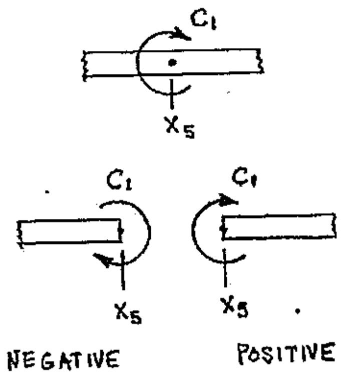

PROBLEM: EXAMPLE 14-5

GIVEN: A SIMPLY-SUPPORTED BEAM IS LOADED AS SHOWN BELOW.

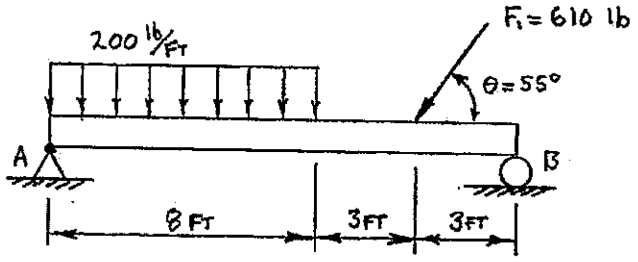

FIND: CONSTRUCT A COMPLETE LOAD-SHEAR-BENDING MOMENT DIAGRAM OF THE BEAM.

SOLUTION:

FBD OF BEAM: (TO DETERMINE SUPPORT REACTIONS)

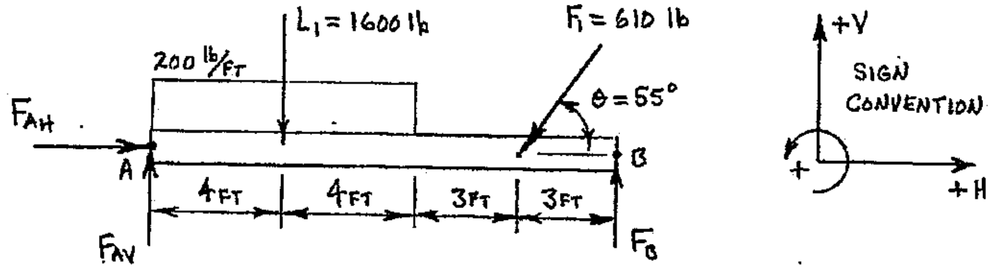

DETERMINE SUPPORT REATION AT B, F_B:

$$\Sigma M_A = 0$$

$$0 = \pm[(L_1)(d\perp)] \pm [(F_{1V})(d\perp)] \pm [(F_B)(d\perp)]$$

$$0 = -[(L_1)(4FT)] - [(F_1)(\sin 55^\circ)(11FT)] + [(F_B)(14FT)]$$

$$F_B = \frac{+[(L_1)(4FT)] + [(F_1)(\sin 55^\circ)(11FT)]}{14\,FT}$$

$$F_B = \frac{+[(1600\,lb)(4FT)] + [(610\,lb)(\sin 55^\circ)(11FT)]}{14\,FT}$$

$$F_B = +849.751\ lb$$

$$F_B = \underline{849.751\ lb\ \uparrow}$$

CONT'D.

PROBLEM: EXAMPLE 14-5 (CONT'D.)

DETERMINE VERTICAL COMPONENT OF REACTION AT A, F_{AV}:

$$\Sigma M_B = 0$$

$$0 = \pm[(F_{AV})(d\perp)] \pm [(L_1)(d\perp)] \pm [(F_{1V})(d\perp)]$$

$$0 = -[(F_{AV})(14\text{ FT})] + [(L_1)(10\text{ FT})] + [(F_1)(\sin 55°)(3\text{ FT})]$$

$$F_{AV} = \frac{+[(L_1)(10\text{ FT})] + [(F_1)(\sin 55°)(3\text{ FT})]}{14\text{ FT}}$$

$$F_{AV} = \frac{+[(1600\text{ lb})(10\text{ FT}) + [(610\text{ lb})(\sin 55°)(3\text{ FT})]}{14\text{ FT}}$$

$$F_{AV} = +1249.932\text{ lb}$$

$$F_{AV} = \underline{1249.932\text{ lb} \uparrow}$$

DETERMINE HORIZONTAL COMPONENT OF REACTION AT A, F_{AH}:

$$\Sigma F_H = 0$$

$$0 = \pm F_{AH} \pm F_{1H}$$

$$0 = +F_{AH} - (F_1)(\cos 55°)$$

$$F_{AH} = +(F_1)(\cos 55°)$$

$$F_{AH} = +(610\text{ lb})(\cos 55°)$$

$$F_{AH} = +349.882\text{ lb}$$

$$F_{AH} = \underline{349.882\text{ lb} \longrightarrow}$$

* F_{AH} IS NOT REQUIRED AND WILL NOT BE SHOWN ON LOAD DIAGRAM.

DETERMINE VERTICAL COMPONENT OF F_1 FOR LOAD DIAGRAM:

$$F_{1V} = F_1(\sin\theta)$$

$$F_{1V} = (610\text{ lb})(\sin 55°)$$

$$F_{1V} = \underline{499.683\text{ lb} \downarrow}$$

CONT'D.

PROBLEM: EXAMPLE 14-5 (CONT'D.)

LOAD - SHEAR - BENDING MOMENT DIAGRAM:

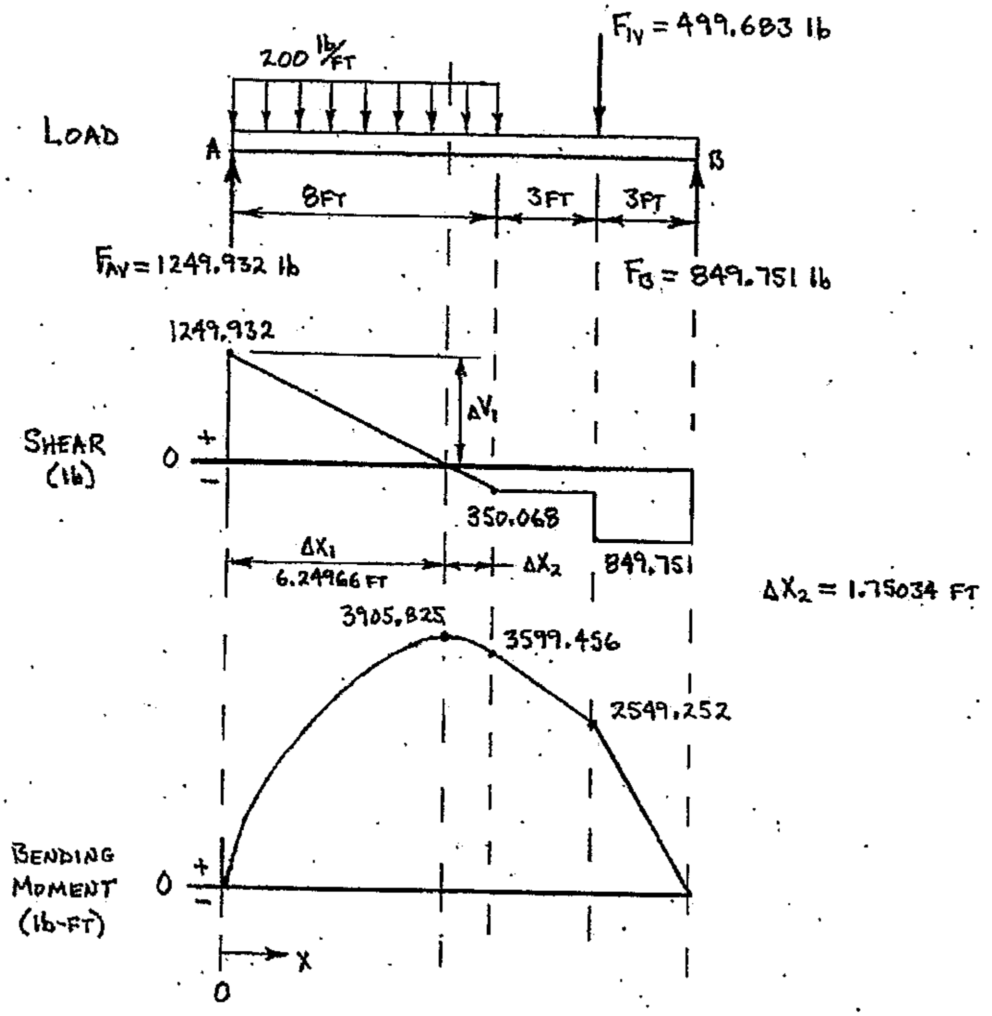

CALCULATIONS FOR DIAGRAMS:

INTERVAL LENGTHS ΔX_1 AND ΔX_2:

ΔV_1 = AREA ABOVE = $(-200\ \text{lb/FT})(\Delta X_1)$

$\Delta X_1 = \dfrac{\Delta V_1}{-200\ \text{lb/FT}}$

$\Delta X_1 = \dfrac{-1249.932\ \text{lb}}{-200\ \text{lb/FT}}$

ΔX_1 = 6.24966 FT

$\Delta X_2 = 8\ \text{FT} - \Delta X_1$

$\Delta X_2 = 8\ \text{FT} - 6.24966\ \text{FT}$

ΔX_2 = 1.75034 FT

CONT'D.

PROBLEM: EXAMPLE 14-5 (CONT'D.)

CHANGE IN BENDING MOMENT (ΔM_1) OVER INTERVAL ΔX_1:

ΔM_1 = AREA ABOVE = ½ (BASE)(HEIGHT)

$\Delta M_1 = \frac{1}{2}(\Delta X_1)(+1249.932 \text{ lb})$

$\Delta M_1 = \frac{1}{2}(6.24966 \text{ FT})(+1249.932 \text{ lb})$

$\Delta M_1 = \underline{+3905.825 \text{ lb·FT}}$

AND: $M_{6.24966} = 3905.825 \text{ lb·FT}$ (POSITIVE)

CHANGE IN BENDING MOMENT (ΔM_2) OVER INTERVAL ΔX_2:

ΔM_2 = AREA ABOVE = ½ (BASE)(HEIGHT)

$\Delta M_2 = \frac{1}{2}(\Delta X_2)(-350.068 \text{ lb})$

$\Delta M_2 = \frac{1}{2}(1.75034 \text{ FT})(-350.068 \text{ lb})$

$\Delta M_2 = \underline{-306.369 \text{ lb·FT}}$

INTERNAL BENDING MOMENT AT X_8 (M_8 AT $X = 8$ FT):

$M_8 = M_{6.24966} + \Delta M_2$

$M_8 = +3905.825 \text{ lb·FT} + (-306.369 \text{ lb·FT})$

$M_8 = +3599.456 \text{ lb·FT}$

$M_8 = \underline{3599.456 \text{ lb·FT (POSITIVE)}}$

CHANGE IN BENDING MOMENT (ΔM_3) FROM X_8 TO X_{11}:

ΔM_3 = AREA ABOVE = (BASE)(HEIGHT)

$\Delta M_3 = (3 \text{ FT})(-350.068 \text{ lb})$

$\Delta M_3 = \underline{-1050.204 \text{ lb·FT}}$

CONT'D.

PROBLEM: EXAMPLE 14-5 (CONT'D.)

INTERNAL BENDING MOMENT AT X_{11} (M_{11} AT X = 11 FT):

$M_{11} = M_8 + \Delta M_3$

$M_{11} = +3599.456 \text{ lb·FT} + (-1050.204 \text{ lb·FT})$

$M_{11} = +2549.252 \text{ lb·FT}$

$M_{11} = \underline{\underline{2549.252 \text{ lb·FT (POSITIVE)}}}$

CHANGE IN BENDING MOMENT (ΔM_4) FROM X_{11} TO X_{14}:

$\Delta M_4 = \text{AREA ABOVE} = (\text{BASE})(\text{HEIGHT})$

$\Delta M_4 = (3 \text{ FT})(-849.751 \text{ lb})$

$\Delta M_4 = \underline{\underline{-2549.253 \text{ lb·FT}}}$

INTERNAL BENDING MOMENT AT X_{14}: (M_{14} MUST EQUAL ZERO)

$M_{14} = M_{11} + \Delta M_4$

$M_{14} = +2549.252 \text{ lb·FT} + (-2549.253 \text{ lb·FT})$

$M_{14} = -0.001 \text{ lb·FT}$ (ROUNDING ERROR)

$M_{14} \cong \underline{\underline{0}}$ (BENDING MOMENT DIAGRAM HAS CLOSURE, RETURNS TO ZERO AT X = 14 FT)

PROBLEM: EXAMPLE 14-6

GIVEN: A CANTILEVER BEAM IS LOADED AS SHOWN BELOW. THE SUPPORT REACTIONS ARE: $F_{AH} = 0$, $F_{AV} = 9$ kN ↑ AND $C_A = 34$ kN·m ↻.

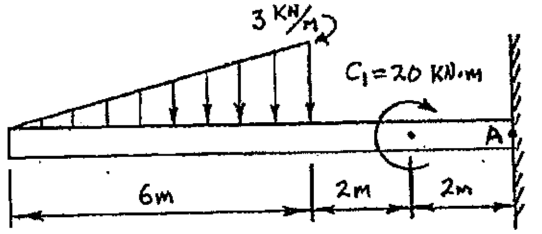

FIND: CONSTRUCT A COMPLETE LOAD-SHEAR-BENDING MOMENT DIAGRAM OF THE BEAM.

SOLUTION:

LOAD-SHEAR-BENDING MOMENT DIAGRAM:

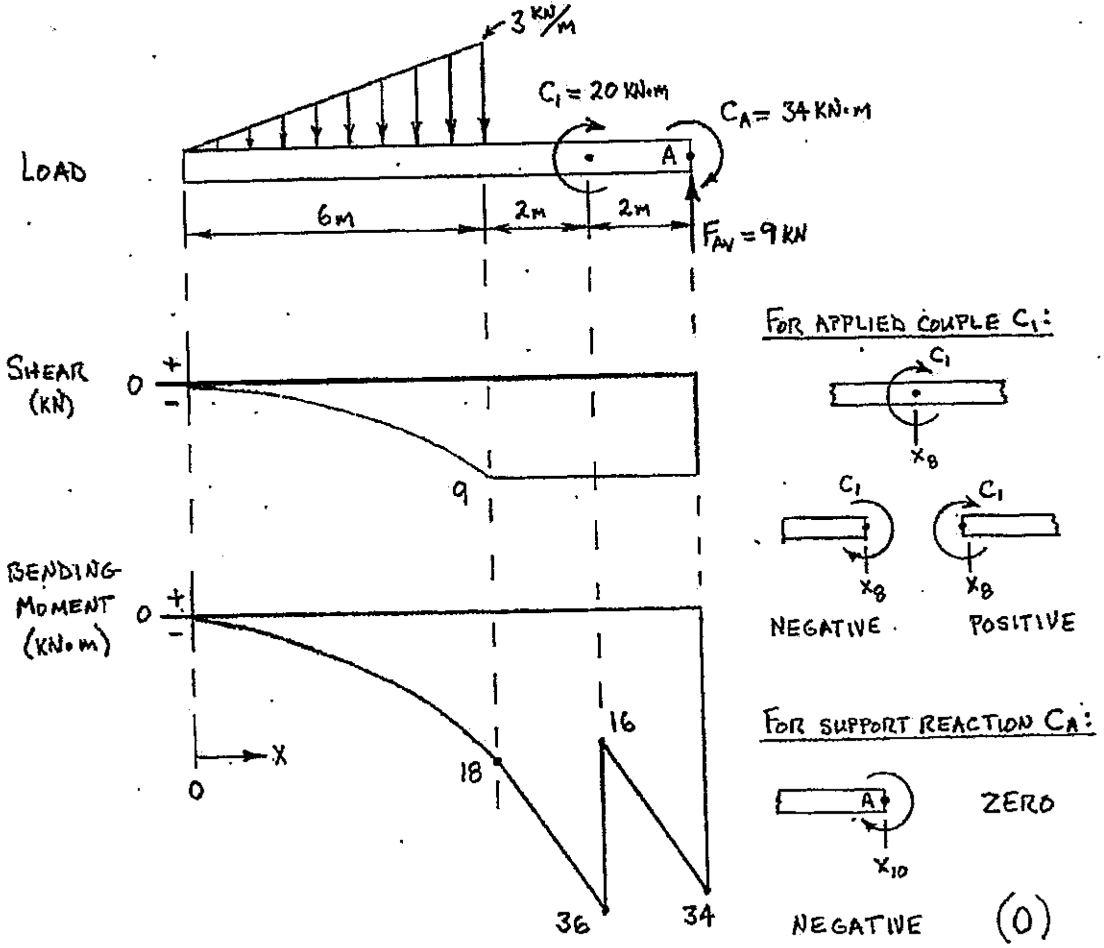

PROBLEM: EXAMPLE 14-7

GIVEN: A CANTILEVER BEAM IS LOADED AS SHOWN BELOW. THE SUPPORT REATIONS ARE: $F_{AH} = 0$, $F_{AY} = 310$ lb ↑ AND $C_A = 360$ lb·FT CA.

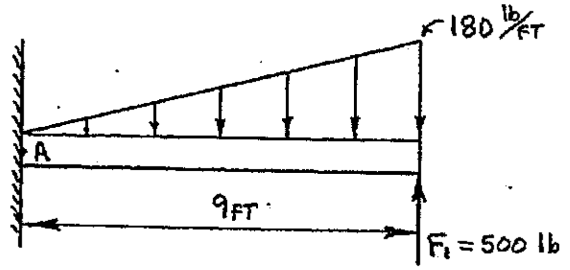

FIND: CONSTRUCT A COMPLETE LOAD-SHEAR-BENDING MOMENT DIAGRAM OF THE BEAM.

SOLUTION:

LOAD-SHEAR-BENDING MOMENT DIAGRAM: (CALCULATIONS ON FOLLOWING PAGES)

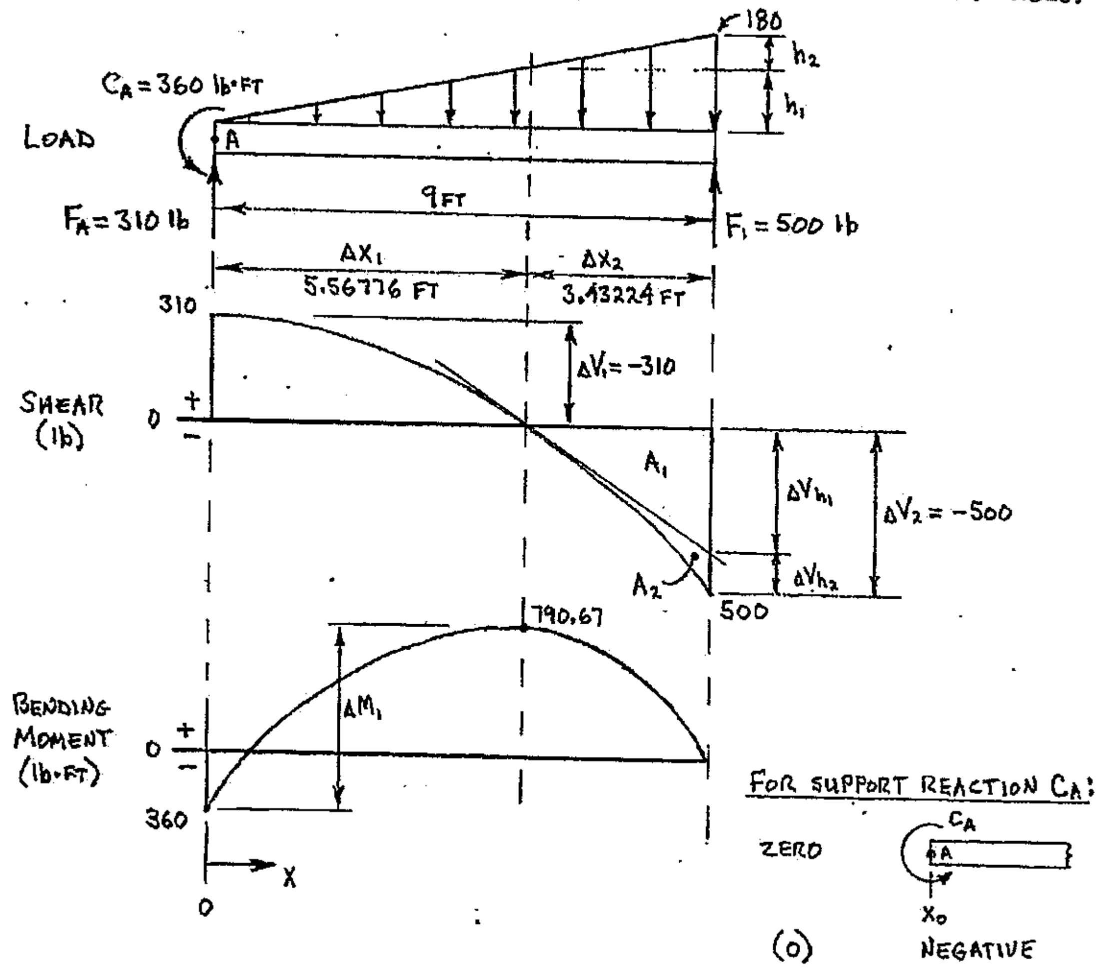

CONT'D.

PROBLEM: EXAMPLE 14-7 (CONT'D.)

DETERMINE RELATIONSHIP BETWEEN h_1 AND ΔX_1: (USING SIMILAR TRIANGLES)

$$\frac{h_1}{\Delta X_1} = \frac{-180\ \text{lb/FT}}{9\ \text{FT}}$$

$$h_1 = \left(\frac{-180\ \text{lb/FT}}{9\ \text{FT}}\right)\Delta X_1$$

$$h_1 = (-20\ \text{lb/FT}^2)\,\Delta X_1$$

FROM CHANGE IN SHEAR (ΔV_1) OVER INTERVAL ΔX_1: ($\Delta V_1 = -310$ lb)

ΔV_1 = AREA OF LOAD DIAGRAM, OVER ΔX_1 = $\frac{1}{2}$(BASE)(HEIGHT)

$$\Delta V_1 = \tfrac{1}{2}(\Delta X_1)(h_1) \qquad \text{AND: } h_1 = (-20\ \text{lb/FT}^2)\,\Delta X_1$$

$$\Delta V_1 = \tfrac{1}{2}(\Delta X_1)(-20\ \text{lb/FT}^2)\,\Delta X_1$$

$$\Delta V_1 = (-10\ \text{lb/FT}^2)\,\Delta X_1^2$$

$$\Delta X_1^2 = \frac{\Delta V_1}{-10\ \text{lb/FT}^2}$$

$$\Delta X_1 = \sqrt{\frac{\Delta V_1}{-10\ \text{lb/FT}^2}}$$

$$\Delta X_1 = \sqrt{\frac{-310\ \text{lb}}{-10\ \text{lb/FT}^2}}$$

$$\Delta X_1 = \underline{\underline{5.56776\ \text{FT}}}$$

LENGTH OF INTERVAL ΔX_2:

$$\Delta X_2 = 9\ \text{FT} - \Delta X_1$$

$$\Delta X_2 = 9\ \text{FT} - 5.56776\ \text{FT}$$

$$\Delta X_2 = \underline{\underline{3.43224\ \text{FT}}}$$

CONT'D.

PROBLEM: EXAMPLE 14-7 (CONT'D.)

CHANGE IN BENDING MOMENT (ΔM_1) OVER INTERVAL ΔX_1:

ΔM_1 = AREA OF SHEAR DIAGRAM, OVER ΔX_1

$\Delta M_1 = \frac{2}{3}(\Delta X_1)(+310\ lb)$

$\Delta M_1 = \frac{2}{3}(5.56776\ FT)(+310\ lb)$

$\Delta M_1 = \underline{\underline{+1150.67\ lb\cdot FT}}$

INTERNAL BENDING MOMENT AT X = 5.56776 FT:

$M_{5.56776} = M_0 + \Delta M_1$ (ΔM_1 IS FROM $M_0 = -360\ lb\cdot FT$)

$M_{5.56776} = -360\ lb\cdot FT + (+1150.67\ lb\cdot FT)$

$M_{5.56776} = +790.670\ lb\cdot FT$

$M_{5.56776} = \underline{\underline{790.67\ lb\cdot FT\ (POSITIVE)}}$

FOLLOWING WORK IS TO PROVE THAT $M_9 = 0$ (MOMENT CURVE RETURNS TO ZERO @ X_9)

DETERMINE CHANGE IN SHEAR ΔV_{h_1} OVER ΔX_2:

ΔV_{h_1} = AREA ABOVE = (BASE)(HEIGHT)

$\Delta V_{h_1} = (\Delta X_2)(h_1)$ AND: $h_1 = (-20\ lb/FT^2)\Delta X_1$

$\Delta V_{h_1} = (\Delta X_2)(-20\ lb/FT^2)(\Delta X_1)$

$\Delta V_{h_2} = (3.43224\ FT)(-20\ lb/FT^2)(5.56776\ FT)$

$\Delta V_{h_2} = \underline{\underline{-382.198\ lb}}$

CONT'D.

PROBLEM: EXAMPLE 14-7 (CONT'D.)

DETERMINE CHANGE IN SHEAR ΔV_{h2}:

$\Delta V_2 = \Delta V_{h1} + \Delta V_{h2}$

$\Delta V_{h2} = \Delta V_2 - \Delta V_{h1}$

$\Delta V_{h2} = -500\ \text{lb} - (-382.198\ \text{lb})$

$\Delta V_{h2} = \underline{-117.802\ \text{lb}}$

DETERMINE CHANGE IN BENDING MOMENT (ΔM_2) OVER ΔX_2:

$\Delta M_2 = \text{AREA ABOVE} = A_1 + A_2$

$\Delta M_2 = [\tfrac{1}{2}(\Delta X_2)(\Delta V_{h1})] + [\tfrac{1}{3}(\Delta X_2)(\Delta V_{h2})]$

$\Delta M_2 = [(\tfrac{1}{2})(3.43224\ \text{FT})(-382.198\ \text{lb})] + [(\tfrac{1}{3})(3.43224\ \text{FT})(-117.802\ \text{lb})]$

$\Delta M_2 = \underline{-709.6725\ \text{lb}\cdot\text{FT}}$

DETERMINE BENDING MOMENT AT $X = 9\ \text{FT}$: (M_9 SHOULD BE ZERO)

$M_9 = M_{5.56776} + \Delta M_2$

$M_9 = +790.67\ \text{lb}\cdot\text{FT} + (-790.67\ \text{lb}\cdot\text{FT})$

$M_9 = \underline{0}$

— BENDING MOMENT DIAGRAM RETURNS TO ZERO AT X_9.

PROBLEM: EXAMPLE 14-8

GIVEN: AN OVERHANGING BEAM IS LOADED AS SHOWN BELOW. THE SUPPORT REACTIONS ARE: F_A = 2298.483 lb ↑, F_{DH} = 173.273 lb → AND F_{DV} = 76.897 lb ↓. THE VERTICAL COMPONENT OF APPLIED FORCE F_2 IS: F_{2Y} = 371.586 lb ↓.

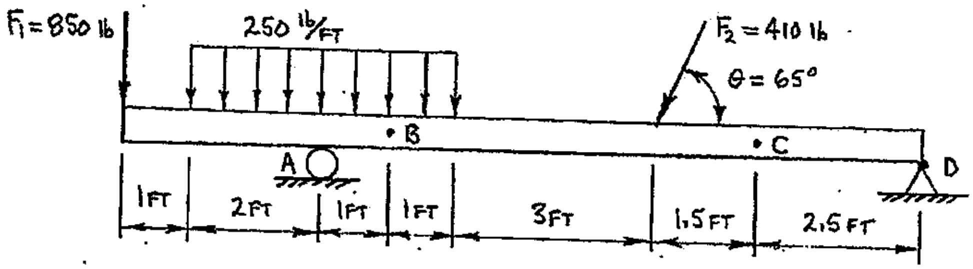

FIND: CONSTRUCT A COMPLETE LOAD-SHEAR-BENDING MOMENT DIAGRAM OF THE BEAM. THEN, USING THE DIAGRAM, DETERMINE THE MAGNITUDE AND MODE OF THE INTERNAL SHEAR FORCE AND THE INTERNAL BENDING MOMENT AT LOCATIONS B AND C.

SOLUTION:

LOAD-SHEAR-BENDING MOMENT DIAGRAM IS ON FOLLOWING PAGE.

SUPPORTING CALCULATIONS BEGIN BELOW, AND THEN CONTINUE AFTER THE LOAD-SHEAR-BENDING MOMENT DIAGRAM.

CHANGE IN BENDING MOMENT (ΔM_3) FROM X_3 TO X_5:

ΔM_3 = AREA ABOVE → TRAPEZOID

$$\Delta M_3 = \left[\tfrac{1}{2}(2\text{FT})(+500\text{ lb})\right] + \left[(2\text{FT})(+448.483\text{ lb})\right]$$

$$\Delta M_3 = \underline{+1396.966\text{ lb}\cdot\text{FT}}$$

BENDING MOMENT AT X_5:

$$M_5 = M_3 + \Delta M_3$$

$$M_5 = -3050\text{ lb}\cdot\text{FT} + (+1396.966\text{ lb}\cdot\text{FT})$$

$$M_5 = -1653.034\text{ lb}\cdot\text{FT}$$

$$M_5 = \underline{1653.034\text{ lb}\cdot\text{FT (NEGATIVE)}}$$

CONT'D.

PROBLEM: EXAMPLE 14-8 (CONT'D.)

LOAD-SHEAR-BENDING MOMENT DIAGRAM:

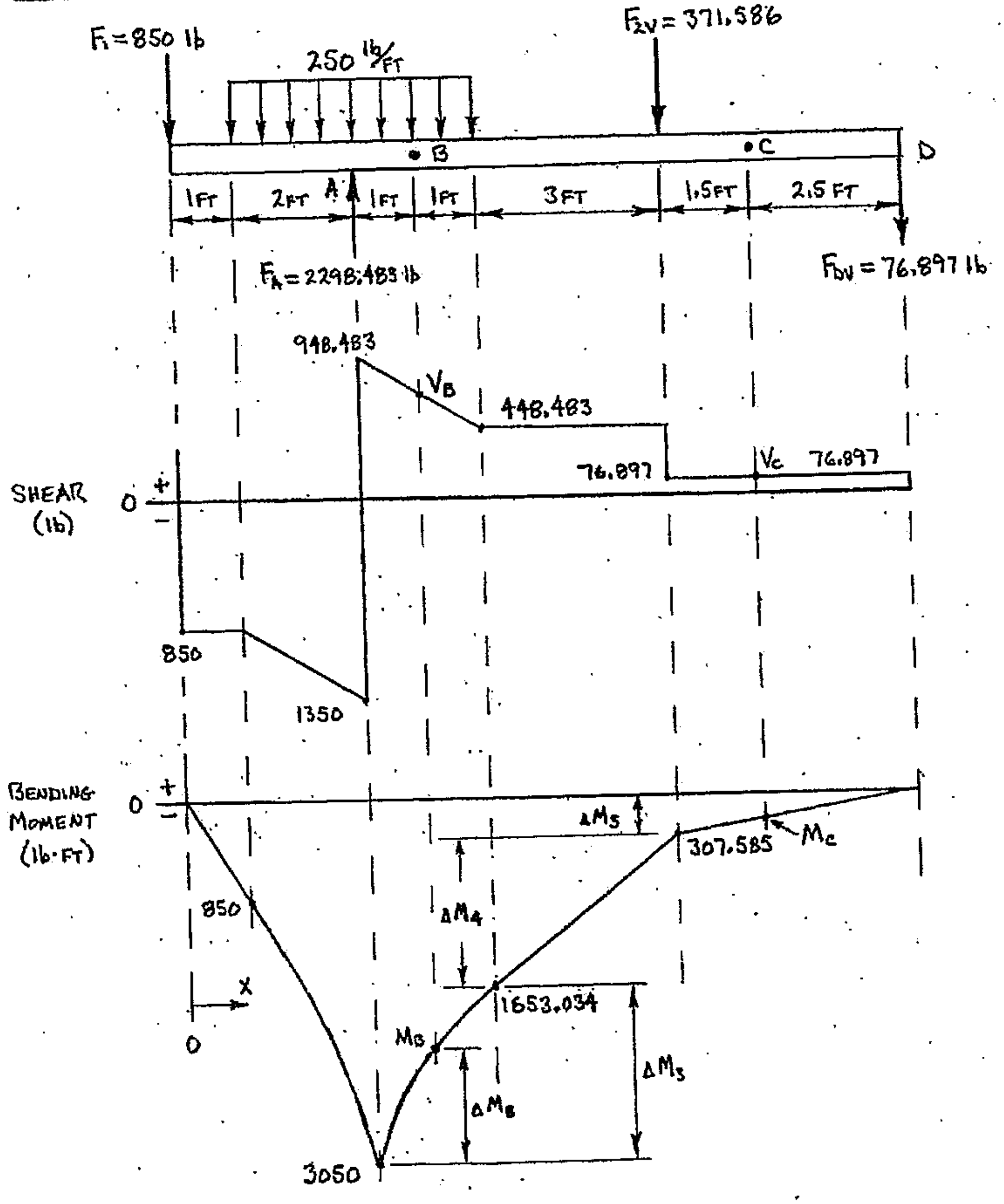

CONT'D.

PROBLEM: EXAMPLE 14-8 (CONT'D.)

CHANGE IN BENDING MOMENT (ΔM_4) FROM X_5 TO X_8:

ΔM_4 = AREA ABOVE

$\Delta M_4 = (3\text{FT})(+448.483\text{ FT})$

$\Delta M_4 = +1345.449\text{ lb}\cdot\text{FT}$

BENDING MOMENT AT X_8:

$M_8 = M_5 + \Delta M_4$

$M_8 = -1653.034\text{ lb}\cdot\text{FT} + (+1345.449\text{ lb}\cdot\text{FT})$

$M_8 = -307.585\text{ lb}\cdot\text{FT}$

$M_8 = 307.585\text{ lb}\cdot\text{FT}$ (NEGATIVE)

CHANGE IN BENDING MOMENT (ΔM_5) FROM X_8 TO X_{11}:

ΔM_5 = AREA ABOVE

$\Delta M_5 = (4\text{FT})(+76.897\text{ lb})$

$\Delta M_5 = +307.588\text{ lb}\cdot\text{FT}$ (RETURNS MOMENT CURVE TO ZERO AT X_{12}).

INTERNAL SHEAR FORCE AND BENDING MOMENT AT LOCATION B:

$V_B = V_3 + (\Delta V \text{ FROM } X_3 \text{ TO } B)$

$V_B = +948.483\text{ lb} + (-250\text{ lb})$

$V_B = +698.483\text{ lb}$

$V_B = 698.483\text{ lb}$ (POSITIVE)

CONT'D.

PROBLEM: EXAMPLE 14-8 (CONT'D.)

CHANGE IN BENDING MOMENT (ΔM_B) FROM X_3 TO B:

ΔM_B = AREA ABOVE + TRAPEZOID

$$\Delta M_B = \left[(\tfrac{1}{2})(1\,FT)(+250\,lb)\right] + \left[(1\,FT)(V_B)\right]$$

$$\Delta M_B = \left[(\tfrac{1}{2})(1\,FT)(+250\,lb)\right] + \left[(1\,FT)(+698.483\,lb)\right]$$

$$\Delta M_B = \underline{+823.483\ lb\cdot FT}$$

BENDING MOMENT AT B:

$$M_B = M_3 + \Delta M_B$$

$$M_B = -3050\ lb\cdot FT + (+823.483\ lb\cdot FT)$$

$$M_B = -2226.52\ lb\cdot FT$$

$$M_B = \underline{2226.52\ lb\cdot FT\ (NEGATIVE)}$$

INTERNAL SHEAR FORCE AND BENDING MOMENT AT LOCATION C:

$V_c = \underline{76.897\ lb\ (POSITIVE)}$ READ DIRECTLY FROM DIAGRAM

BENDING MOMENT AT LOCATION C: (FROM/USING SIMILAR TRIANGLES)

$$\frac{M_C}{2.5\,FT} = \frac{M_B}{4\,FT}$$

$$M_c = \left(\frac{M_B}{4\,FT}\right)2.5\,FT$$

$$M_c = \left(\frac{-307.585\ lb\cdot FT}{4\,FT}\right)(2.5\,FT$$

$$M_c = -192.241\ lb\cdot FT$$

$$M_c = \underline{192.241\ lb\cdot FT\ (NEGATIVE)}$$

ANSWER:

V_B = 698.5 lb (POSITIVE)

M_B = 2227 lb·FT (NEGATIVE)

V_c = 76.90 lb (POSITIVE)

M_c = 192.2 lb·FT (NEGATIVE)

PRACTICE PROBLEMS

14.1 An overhanging beam is loaded as shown below. Construct a COMPLETE load-shear-bending moment diagram of the beam.

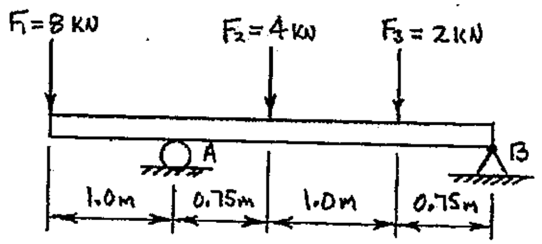

14.2 A simply-supported beam is loaded as shown below. The support reactions are: F_A = 630-lb ↑, F_{BH} = 0 and F_{BV} = 960-lb ↑. Construct a COMPLETE load-shear-bending moment diagram of the beam.

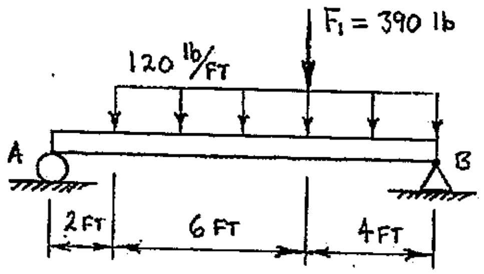

14.3 A cantilever beam is loaded as shown below. Construct a COMPLETE load-shear-bending moment diagram of the beam.

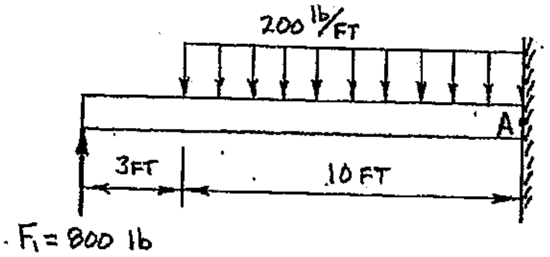

14.4 An overhanging beam is loaded as shown below. The support reactions for the beam are: F_A = 11,000-N ↑, F_{BH} = 0, and F_{BV} = 11,000-N ↑. Construct a COMPLETE load-shear-bending moment diagram of the beam.

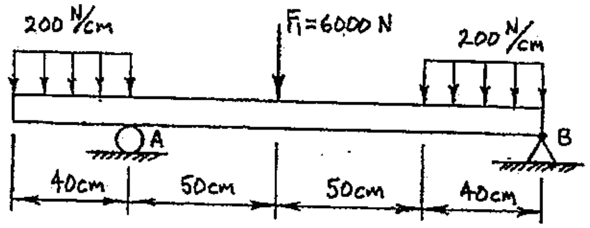

PRACTICE PROBLEMS

14.5 A simply-supported beam is loaded as shown below. The support reactions are: $F_{AH} = 0$, $F_{AV} = 4.25$-kN ↑ and $F_B = 3.75$-kN ↑. Construct a COMPLETE load-shear-bending moment diagram of the beam.

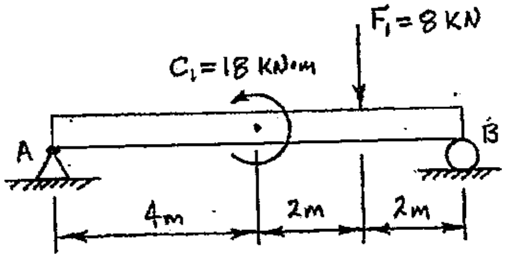

14.6 An overhanging beam is loaded as shown below. The support reactions for the beam are: $F_{AH} = 0$, $F_{AV} = 488$-lb ↑ and $F_B = 312$-lb ↑. Construct a COMPLETE load-shear-bending moment diagram of the beam.

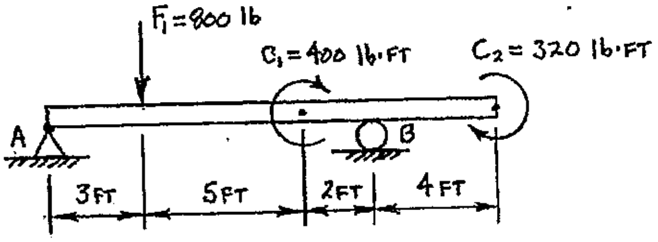

14.7 Construct a COMPLETE load-shear-bending moment diagram of the cantilever beam loaded as shown below.

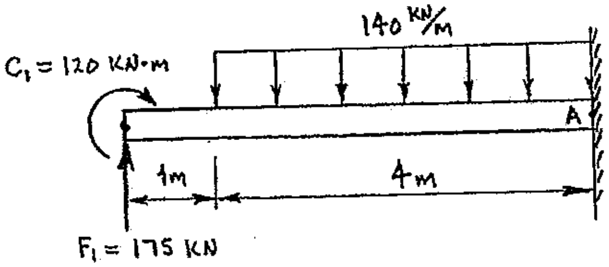

14.8 Construct a COMPLETE load-shear-bending moment diagram of the simply-supported beam loaded as shown below.

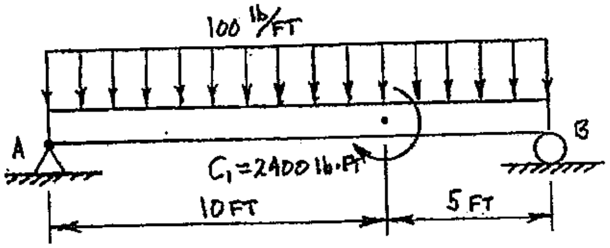

PRACTICE PROBLEMS

14.9 Construct a COMPLETE load-shear-bending moment diagram of the simply-supported beam loaded as shown below.

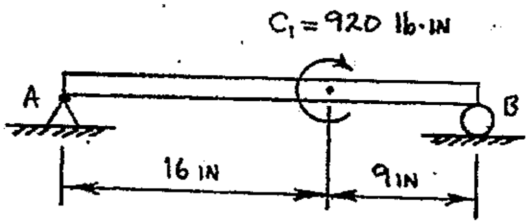

14.10 A cantilever beam is loaded as shown below. The support reactions at the wall are: $F_{AH} = 0$, $F_{AV} = 6.0$-kN ↑ and $C_A = 18$ kN-m ↺. Construct a COMPLETE load-shear-bending moment diagram of the beam.

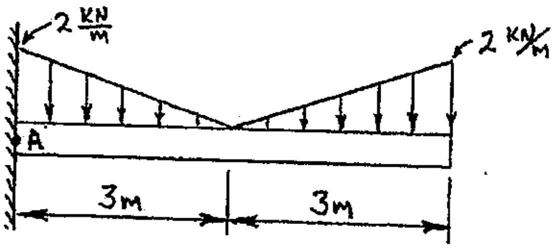

14.11 A simply-supported beam is loaded as shown below. The support reactions are: $F_A = 1350$-lb ↑, $F_{BH} = 0$ and $F_{BV} = 675$-lb ↑. Construct a COMPLETE load-shear-bending moment diagram of the beam.

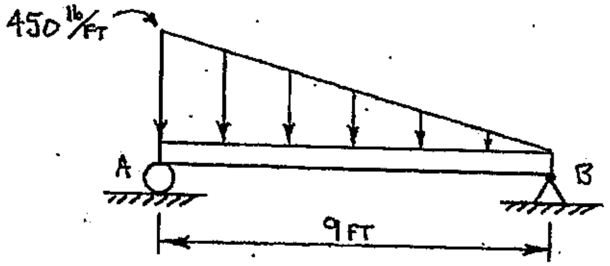

14.12 Construct a complete load-shear-bending moment diagram for the overhanging beam loaded as shown below.

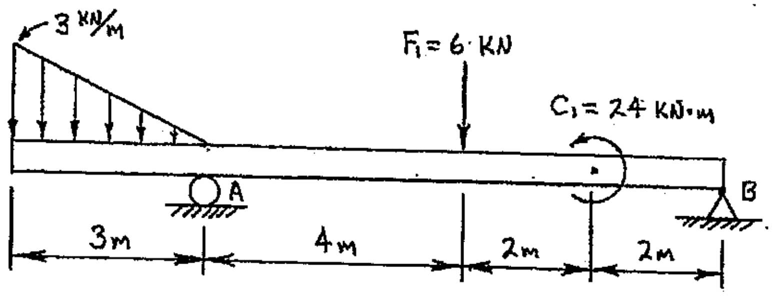

PRACTICE PROBLEMS

14.13 An overhanging beam is loaded as shown below. The support reactions for the beam are: F_A = 1800-lb ↑, F_{BH} = 0 and F_{BV} = 600-lb ↑. Construct a COMPLETE load-shear-bending moment diagram of the beam.

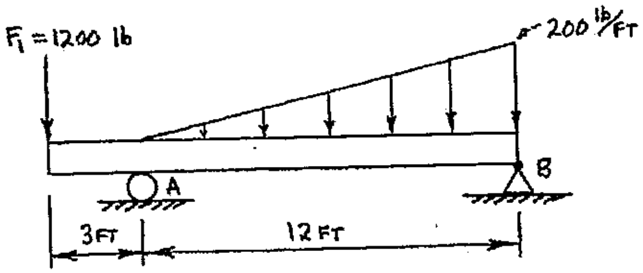

14.14 Construct a COMPLETE load-shear-bending moment diagram of the beam loaded as shown below.

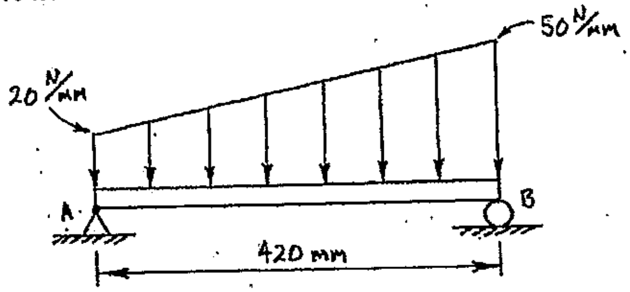

14.15 A simply-supported beam is loaded as shown below. The support reactions for the beam are: F_{AH} = 0, F_{AV} = 830-lb ↑ and F_B = 790-lb ↑. Construct a COMPLETE load-shear-bending moment diagram of the beam.

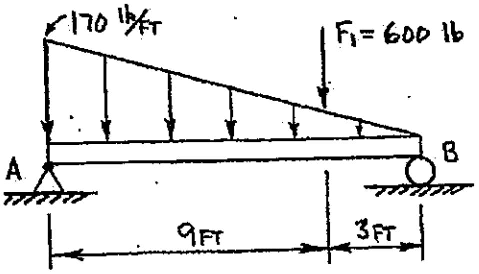

14.16 Construct a COMPLETE load-shear-bending moment diagram of the overhanging beam loaded as shown below.

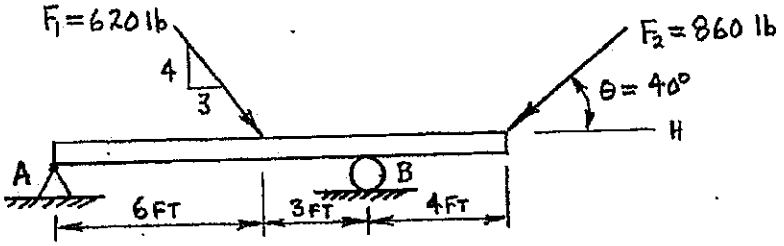

PRACTICE PROBLEMS

14.17 An overhanging beam is loaded as shown below. First, construct a COMPLETE load-shear-bending moment diagram of the beam. Then determine the magnitude and mode of the internal axial force at the location where the internal bending moment is at its maximum value (positive or negative).

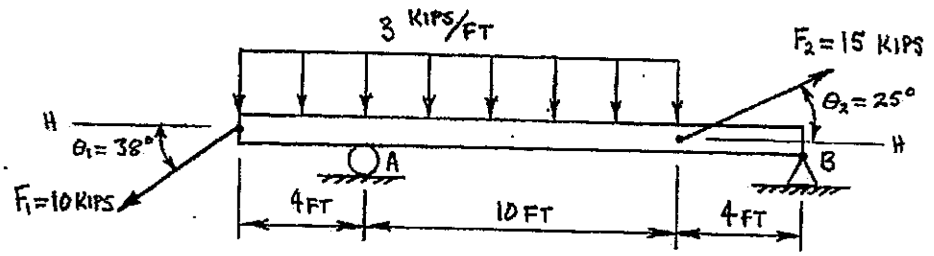

14.18 A cantilever beam is oriented and loaded as shown below. The support reactions at location A are: $F_{AX} = 0$, F_{AY} = 1240-lb / and C_A = 10,360-lb-ft ↺. Construct a complete load-shear-bending moment diagram of the beam.

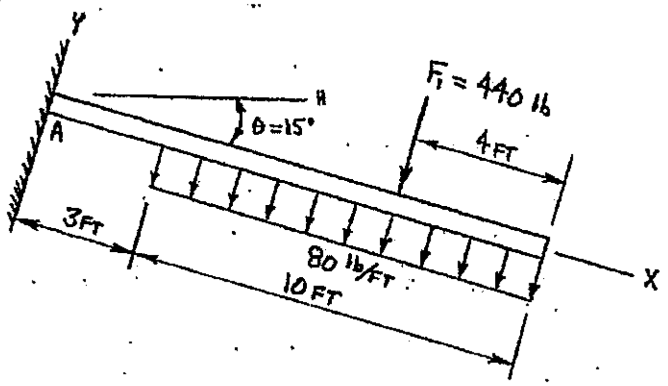

14.19 The beam shown below is supported by cable AB and a pin at C. Assume that the "top" surface of the beam is the surface closest to point A. Construct a COMPLETE load-shear-bending moment diagram of the beam.

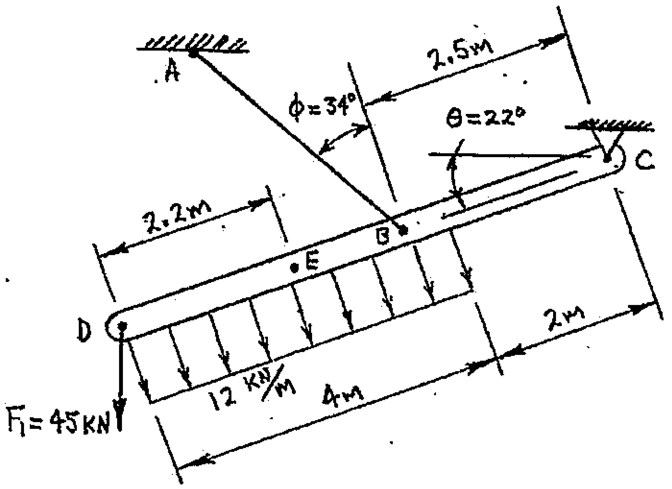

CHAPTER 15: STATIC DRY FRICTION

FRICTION

Friction is an influence that prevents (or attempts to prevent) contacting surfaces from sliding across each other. Friction is modeled as a REACTIVE force, since friction appears to exist only in response (in reaction) to externally applied forces that produce (or attempt to produce) relative motion between contacting surfaces. Friction's purpose seems to be either to maintain or to re-establish static equilibrium.

Friction could be considered as either good or bad, depending on the particular application. One of the design considerations for brakes, clutches, or belt drives is to maximize friction; so friction is required for the correct operation of these devices. Walking, driving a car, or even picking up an object by hand would be almost impossible without friction. However, in many applications (bearings, engines, transmissions, etc.) friction is undesirable and results in loss of energy, heat build-up and/or wear on any sliding contact surfaces.

Friction can be considered as either dry or fluid. Fluid friction describes any condition where contact surfaces are separated by a thin layer of fluid (or lubricant). Evaluating fluid friction requires knowledge about the characteristics and velocity of the fluid, so fluid friction is best studied as a part of fluid mechanics and will not be addressed here. Dry friction describes the resistance to motion when two dry surfaces slide, or tend to slide, relative to each other. Only dry friction will be considered in this manual, so the term friction will be used for any problem involving dry friction.

FRICTION FORCE AND NORMAL FORCE

Consider the case of a block of weight W resting on a horizontal surface as shown in Figure 15-1 below. The free body diagram for this object would include one acting force (W) and one equal but opposite reaction force (N). The reaction force is perpendicular to the horizontal contact surface and is called a NORMAL FORCE (normal is often used to mean perpendicular). The symbol for a normal force is a capital **N**, and a normal force must always be modeled as PUSHING on the contact surface. The weight (W) is always shown as a concentrated force acting vertically downward, with a line of action that passes through the centroid of an object.

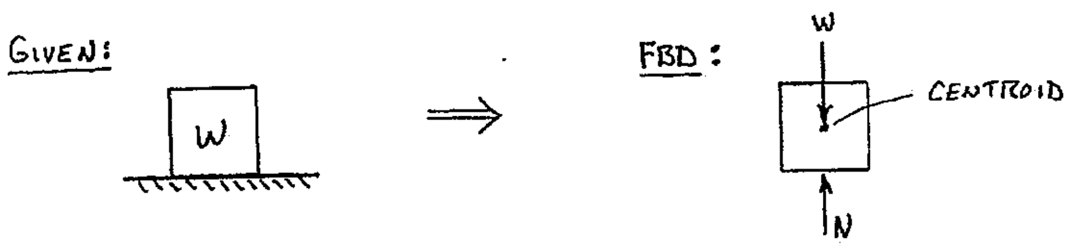

FIGURE 15-1 Block resting on a horizontal surface, and its FBD

In the next diagram (Figure 15-2) a horizontal force (F_1) is applied to the block, but the block remains in static equilibrium. The free body diagram for this condition must include reactions, equal and opposite, to both the weight (W) and the acting force (F_1). Those reactions include a vertical normal force (N), and a friction force (*f*) that is parallel to the flat contacting surfaces. To maintain static equilibrium of the block shown below, the magnitude of the friction force (***f***) must be equal to the magnitude of the applied force (F_1). If the applied force (F_1) were equal to zero, then the friction force would also be zero (see Figure 15-1). As the applied force increases in magnitude, the friction force must also increase at the same rate to maintain static equilibrium.

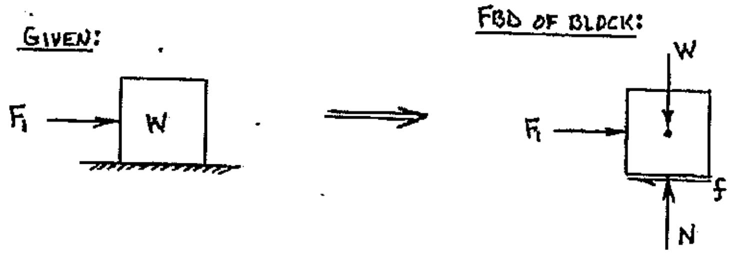

FIGURE 15-2 Block with a horizontal applied force, and the resulting FBD

MAXIMUM FRICTION FORCE, AND IMPENDING MOTION

The graph in Figure 15-3 shows the relationship between the externally applied force and the reactive static friction force. As the applied force (F) increases, the friction force (*f*) will eventually reach a maximum value (f_{max}), which is the limiting value of the static friction force. The maximum friction force occurs at the point of IMPENDING MOTION, which could be considered the "edge" of static equilibrium.

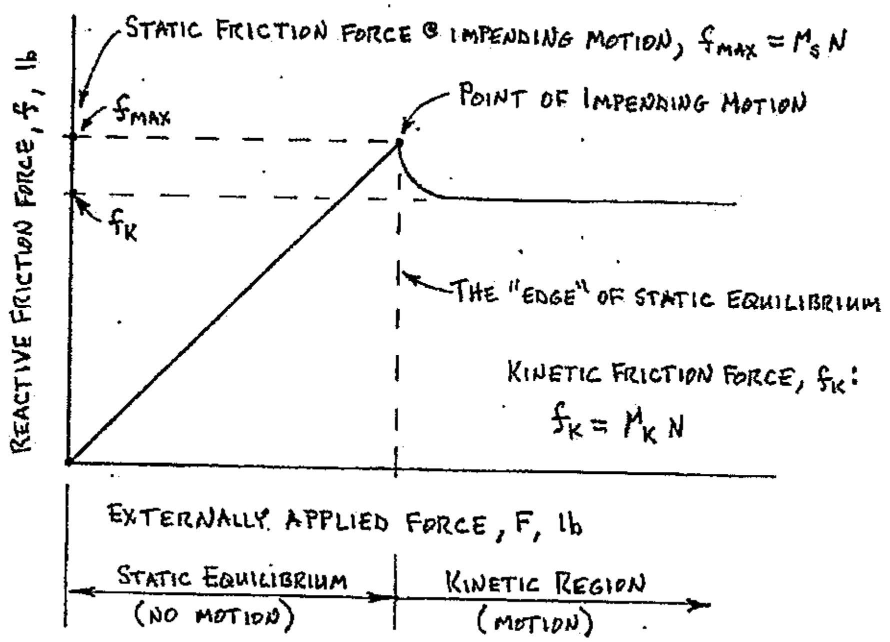

FIGURE 15-3 Graph of friction force (*f*) vs. applied force (F)

At impending motion, the maximum static friction force is proportional to the normal force at the contact surface, and that ratio (f_{max}/N) is called the coefficient of static friction. The coefficient of static friction is given the symbol μ_s. So, $\mu_s = f_{max}/N$ at impending motion (and only at impending motion!). The magnitude of the coefficient of static friction (μ_s) depends on the types of materials in contact, and some typical values are shown in Table 15-1. Tabulated values of μ_s are found experimentally for various combinations of materials, and the reported values for the coefficient of static friction will sometimes vary widely.

Contact Materials	Coefficient of Static Equilibrium (μ_s)
metal on ice	0.03-0.05
leather on wood	0.20-0.50
wood on wood	0.30-0.70
leather on metal	0.30-0.60
aluminum on aluminum	1.10-1.70

TABLE 15-1 Typical values for the coefficient of static friction

Since the value of the normal force (N) at the contact surfaces can usually be calculated, and a tabulated value for the coefficient of static friction (μ_s) can be found in reference materials, the maximum friction force (at impending motion) can be easily calculated. The following relationship is typically used in the solution of static equilibrium problems that involve friction forces where an object is at the point of impending motion (sliding):

At impending motion (and **only** at impending motion): $f_{max} = \mu_s(N)$

When at impending motion, *any* increase in the applied force (F) would cause relative motion, and static equilibrium would NOT be maintained. When an object starts to slide the magnitude of the friction force typically decreases by 20-25%, and then remains constant as the block continues to slide. Sliding friction is normally called KINETIC FRICTION, and is given the symbol (f_k). The kinetic friction force is the product of the coefficient of kinetic friction (μ_k) and the normal force (N) at the contacting surfaces, so: $f_k = \mu_k(N)$. The coefficient of kinetic friction is typically about 75% of the coefficient of static friction ($\mu_k = 0.75\mu_s$).

Development of the Friction Force and Normal Force

Dry friction is thought to be the result of "smooth" surfaces that are not really smooth at a microscopic level. So, any two real surfaces are not actually in contact over their entire surface area, but instead are in contact at a number of small discreet points as shown in Figure 15-4. At each contact point there would be a friction force and a normal force (FBD at left). The total friction force would be equal to the sum of the friction forces, and the total normal force would be equal to the sum of the normal forces (FBD at right). If the number of contact points was increased, then the magnitudes of the normal and friction forces at each point of contact would decrease proportionally, but the magnitudes of the total friction force and the total normal force would not change. So, the magnitudes of the total normal force and total friction force are independent of the area of the contact surface, and only total normal force (N) and total friction force (f) are shown on free body diagrams.

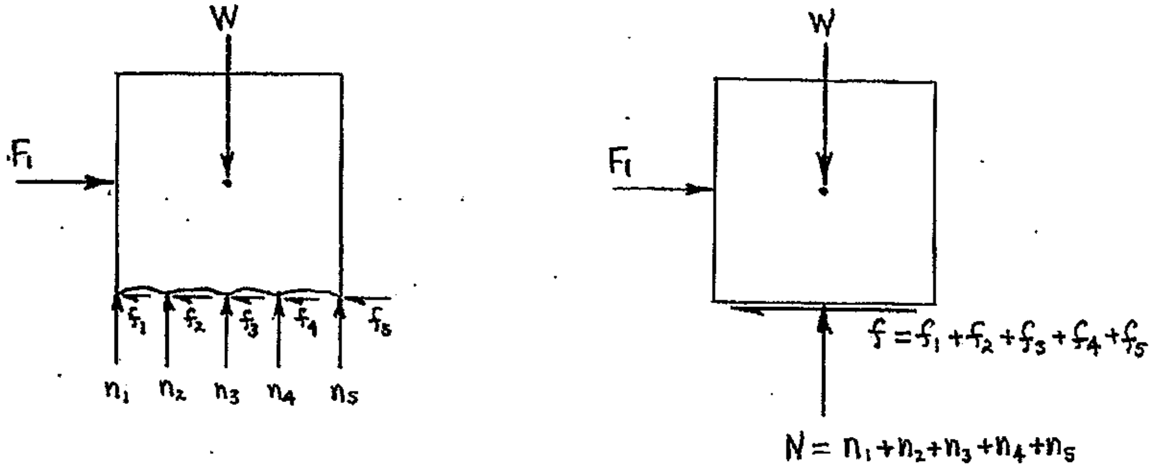

FIGURE 15-4 Two FBDs for a sliding friction problem

Location of the Normal Force and Friction Force on Free Body Diagrams

Since the total normal force is the resultant (summation) of the individual normal force at each point of contact, this resultant would act through the centroid of the normal force distribution. The distribution of the individual normal forces is usually not known, so the total normal force (N) is typically shown on a free body diagram at a location (point of application) that is convenient based on the type of impending motion assumed in that particular free body diagram.

For problems that involve friction forces, the term "impending motion" can mean either impending sliding or impending tipping. The location of the point of application of the total normal force and the total friction force must reflect the particular case that is being evaluated; sliding or tipping. The total normal force (N) is typically shown acting at the contact surface with its line of action passing through the centroid of an object if the object is being evaluated for sliding. For impending sliding, the total friction force is

shown acting parallel to the flat contact surface (Figure 15-5, FBD on left). When evaluating objects for tipping, the point of application for both the total normal force and the total friction force is shown at the point that the object would tend to rotate about during tipping (Figure 15-5, FBD on right).

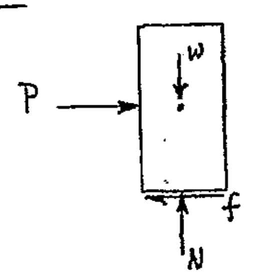

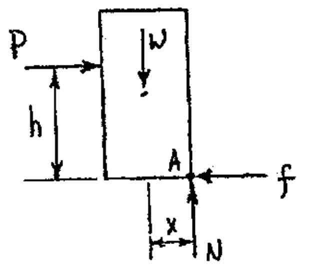

FIGURE 15-5 Location of normal force and friction force for sliding (left) and tipping (right)

CHARACTERISTICS OF A FRICTION FORCE

A friction force is an influence that prevents, or attempts to prevent, contacting surfaces from sliding across each other. A friction force is a reactive force, and appears to exist only when externally applied forces produce, or attempt to produce, motion. Since friction will be modeled as a force, a friction force must have magnitude, direction, sense, and a point of application.

The ***magnitude*** of a static friction force will be somewhere in a range from zero (0) to a maximum of $f_{max} = \mu_s(N)$ at the point of impending motion. If the applied forces cause an object to be in motion (sliding), then the magnitude of the friction force will be that of the kinetic friction force (f_k), where $f_k = \mu_k (N)$.

The ***direction*** (line of action) of a friction force will be tangent to the common boundaries of the contacting surfaces. The direction of a friction force will be parallel to flat contacting surfaces, or tangent to curved surfaces at the point of contact.

The ***sense*** of a friction force is known, since FRICTION ALWAYS OPPOSES RELATIVE MOTION (kinetic), or the tendency for relative motion (static). If relative motion is to the right, the sense of a friction force would be to the left; if relative motion is down, the sense of a friction force would be up, etc.

The ***point of application*** of a friction force is based on how an object is to be evaluated. The friction force is shown along the contact surface when an object is being evaluated for sliding. If an object is to be evaluated for tipping, then the point of application of the friction force (and the normal force) are shown at the point that the object would rotate about if tipping were to occur.

SOLUTION PROCEDURE FOR FRICTION PROBLEMS

Friction problems come in many varieties, but tend to fall into three general groups. The first group includes problems where the actual friction force must be calculated, based on a given loading condition. It is important to remember that there is no one value for the friction force; the static friction force can be any magnitude from zero to f_{max} (f_{max} only at impending motion). First, the friction force required for static equilibrium must be calculated; this establishes both the magnitude and sense of the friction force required to maintain static equilibrium. Next, the maximum friction force is calculated, assuming impending motion [$f_{max} = \mu_s(N)$] . If the friction force required for static equilibrium is less than the maximum friction force, then the friction force required for static equilibrium becomes the calculated value of the actual static friction force for the problem. If the friction force required for static equilibrium is greater than the maximum friction force, then the object is actually sliding and the kinetic friction force must be calculated from the equation $f_k = \mu_k(N)$. A problem of this type is shown in Example 15-1.

Sometimes an object is only evaluated at the point of impending motion (sliding). Normally, a value for the maximum or minimum applied load is calculated based on the assumption that the object is at the point of impending motion, so the friction force used in the solution will be the maximum static friction force, f_{max}. A problem of this type is shown in Example 15-2.

An object may need to be evaluated for both sliding and tipping. The objects in problems of this type could respond to a given loading condition in one of several ways. The object may remain in static equilibrium (no sliding or tipping). The object may slide, or the object may tip. First, a value for the friction force required for static equilibrium is calculated. A value for the maximum static friction force is then calculated and compared to the friction force required for static equilibrium to determine if the object is static or sliding. Finally, the object is evaluated for the tipping condition. A problem of this type is shown in Example 15-3.

Example 15-1 A 100-lb block rests on a 30^0 incline as shown below. A 35-lb force is applied in a direction parallel to the incline. Determine the following:

a) The friction force acting on the block, if $\mu_s = 0.20$ and $\mu_k = 0.16$

b) The friction force acting on the block, if $\mu_s = 0.10$ and $\mu_k = 0.085$

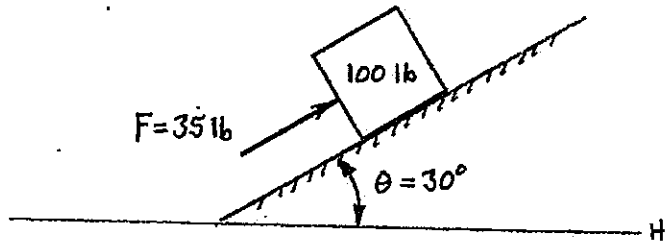

Example 15-1:

Part a) Using $\mu_s = 0.20$ and $\mu_k = 0.16$

A free body diagram is constructed for the block. Note that the sign convention has been rotated so that the Y-axis is aligned perpendicular to the 30^0 incline, which puts the X-axis parallel to the incline. This was done to eliminate components of the friction force and normal force (this greatly simplifies the calculations). The only components required are those for the weight (W_X and W_Y). You must ASSUME A SENSE when calculating the friction force required for static equilibrium.

FBD of the block #1: (the sense of the friction force, f_{REQD}, has been ***assumed***)

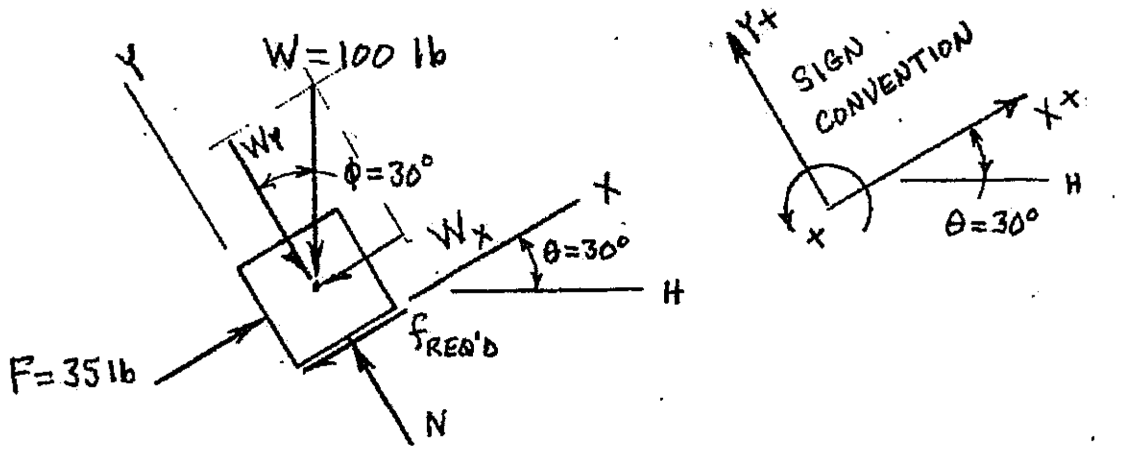

The friction force required for static equilibrium can now be calculated:

$$\Sigma F_X = 0$$
$$0 = \pm F \pm W_X \pm f_{REQD}$$
$$0 = +F - W\sin\phi - f_{REQD}$$
$$f_{REQD} = +F - W\sin\phi$$
$$f_{REQD} = +35\text{ lb} - (100\text{ lb})(\sin 30^0)$$
$$f_{REQD} = +35\text{ lb} - 50\text{ lb}$$
$$f_{REQD} = -15\text{ lb}$$
$$f_{REQD} = 15\text{ lb} \quad \angle 30^o \text{ H}$$

The sense of the friction force required for static equilibrium is up and to the right along the incline, so a15-lb friction force is required in addition to the 35-lb applied force just to maintain static equilibrium and keep the block from sliding down the incline.

cont'd.

Example 15-1: Part a (cont'd.)

Next, the maximum friction force is calculated based on impending sliding <u>down</u> the incline. Impending sliding down was used since the friction force required for static equilibrium is trying to prevent any relative motion of the block <u>down</u> the incline. The sense of the maximum friction force must then point up and to the right, since friction must oppose motion, or the tendency for motion.

<u>FBD of the block #2</u>: (impending sliding <u>down</u> the incline)

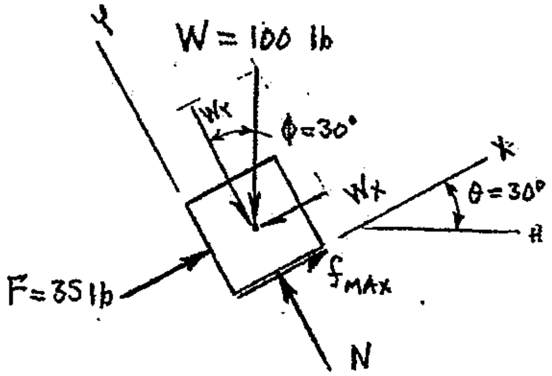

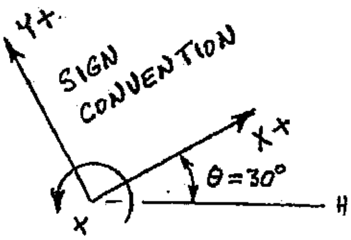

Determine the normal force by applying static equilibrium in the Y-direction:

$$\Sigma F_Y = 0$$
$$0 = \pm N \pm W_Y$$
$$0 = +N - W(\cos\phi)$$
$$N = +W(\cos\phi)$$
$$N = +100\,\text{lb}(\cos 30^0)$$
$$N = +86.6025\,\text{lb}$$
$$N = \underline{86.6025\,\text{lb}} \quad H \;\; 60^\circ$$

Now, f_{max} can be calculated, since $f_{max} = \mu_s(N)$ at impending motion:

$f_{max} = \mu_s(N)$ and: $\mu_s = 0.20$

$$f_{max} = 0.20(86.6025\,\text{lb})$$
$$f_{max} = \underline{17.3205\,\text{lb}} \quad 30^\circ \;\; H$$

cont'd.

Example 15-1: Part a (cont'd.)

Remember, the static friction force can take any value from zero to a maximum of $\boldsymbol{f}_{max} = \mu_s(N)$ at impending motion. Since the friction force required for static equilibrium (f_{REQD} = 15 lb) is less than $\boldsymbol{f}_{max}$, the friction force acting on the block is equal to f_{REQD} and f_{REQD} becomes the answer for Part a of this problem.

$$\text{FRICTION FORCE} = \begin{cases} f_{MAX} = 17.3205 \text{ lb} \\ \text{———} \; f_{REQD} = 15 \text{ lb} \\ f = 0 \end{cases}$$

Answer for Part a) $f_{ACTING} = f_{REQD} =$ 15 lb 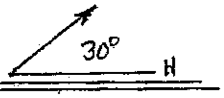

Part b) $\mu_s = 0.10$ and $\mu_k = 0.085$

Part b of this problem starts exactly like Part a, with a free body diagram of the block. The sense of the friction force is assumed, and then a force equilibrium equation is developed to calculate the friction force required for static equilibrium.

FBD of the block #3: (the sense for the friction force, $\boldsymbol{f}_{REQD}$, has been ***assumed***)

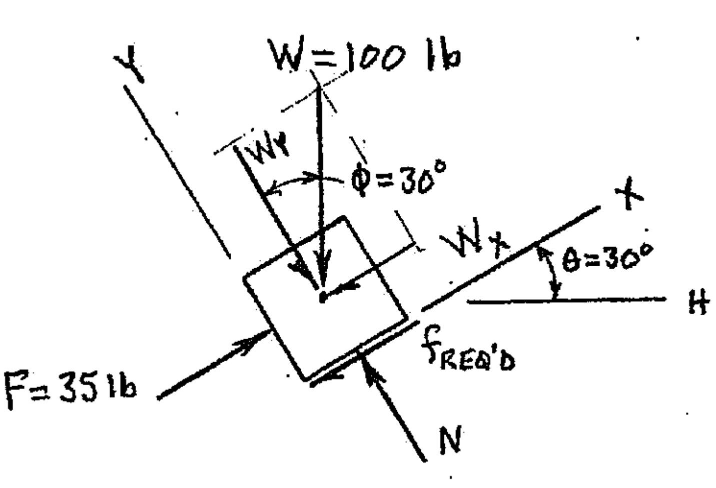

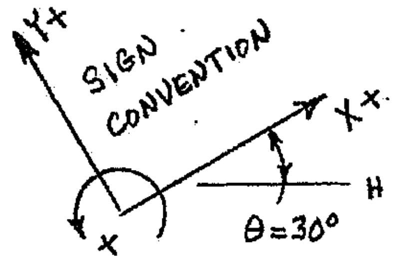

cont'd.

V.S. Hillsman

Example 15-1: Part b (cont'd.)

Determine the friction force required for static equilibrium:

$$\Sigma F_X = 0$$
$$0 = \pm F \pm W_X \pm f_{REQD}$$
$$0 = +F - W\sin\phi - f_{REQD}$$
$$f_{REQD} = +F - W\sin\phi$$
$$f_{REQD} = +35\ \text{lb} - (100\ \text{lb})(\sin 30^\circ)$$
$$f_{REQD} = +35\ \text{lb} - 50\ \text{lb}$$
$$f_{REQD} = -15\ \text{lb}$$
$$f_{REQD} = 15\ \text{lb}$$

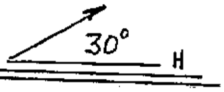

The sense of the friction force required for static equilibrium is up and to the right along the incline, so a15-lb friction force is required in addition to the 35-lb applied force just to maintain static equilibrium and keep the block from sliding down the incline.

Next, a free body diagram of the block is developed for the case of impending sliding down the incline. The normal force (N) and maximum friction force (f_{max}) are then calculated.

FBD of the block #4: (impending sliding down the incline)

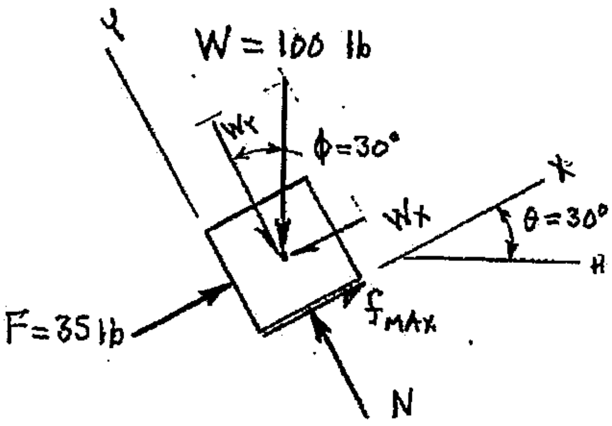

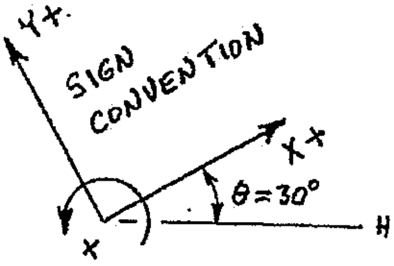

cont'd.

Example 15-1: Part b (cont'd.)

$$\Sigma F_Y = 0$$
$$0 = \pm N \pm W_Y$$
$$0 = +N - W(\cos\phi)$$
$$N = +W(\cos\phi)$$
$$N = +100\text{ lb}(\cos 30^0)$$
$$N = +86.6025\text{ lb}$$
$$N = \underline{\underline{86.6025\text{ lb}}}$$

f_{max} can now be calculated, since $f_{max} = \mu_s(N)$ at impending motion:

$f_{max} = \mu_s(N)$ and $\mu_s = 0.10$ for Part b

$$f_{max} = 0.10(86.6025\text{ lb})$$
$$f_{max} = \underline{\underline{8.66025\text{ lb}}}$$

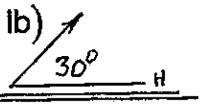

The friction force for Part b can now be determined. Again, remember that the static friction force can take any value required for static equilibrium from a minimum of zero to $f_{max} = \mu_s(N)$ at impending motion. For Part b, the friction force required for static friction (f_{REQD} = 15 lb) is outside of the possible range of the static friction force, as shown in the following figure. This means that the block is actually sliding, so the kinetic friction force must be calculated. Since the block is sliding the kinetic friction force will become the answer for Part b of this problem.

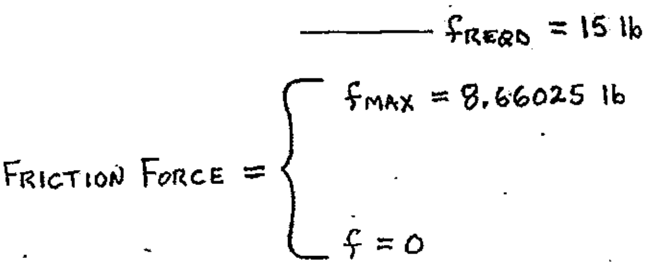

The kinetic friction force can now be calculated:

$f_k = \mu_s(N)$ and: $\mu_s = 0.085$ μ_k

$$f_k = 0.085(86.6025\text{ lb})$$
$$f_k = \underline{\underline{7.36121\text{ lb}}}$$

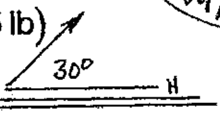

Example 15-1: Part b (cont'd.)

Answer for Part b) $f_{ACTING} = f_k = \underline{7.36121 \text{ lb}}$ 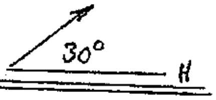

Answers for Example 15-1 are shown in the box below:

> Answers:
>
> Part a) $f_{ACTING} = f_{REQD} = 15.00$ lb 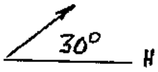
>
>
> Part b) $f_{ACTING} = f_k = 7.361$ lb 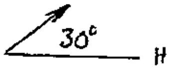
>

Example 15-2 A horizontal force (F) is applied to a 120 lb block that rests on a 25° inclined plane. Calculate the magnitude of the horizontal force (P) required to cause impending motion (sliding) ***up*** the incline. The coefficient of static friction is $\mu_s = 0.22$.

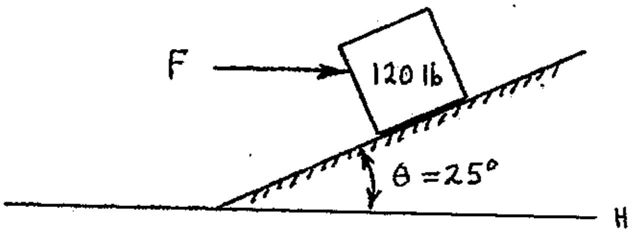

First, a free body diagram is constructed of the block (following page). The relative motion of the block was defined in the problem statement as ***up*** the incline, so the sense of the friction force is shown acting down the incline since friction must oppose relative motion. The friction force used in the solution will be f_{max} because the problem is based on impending motion (sliding). Notice that the sign convention has been rotated to eliminate components of the friction force (f_{max}) and the normal force (N). Components for both the weight (W) and the applied force (F) <u>WILL</u> be required in the solution.

cont'd.

Example 15-2: cont'd.

<u>FBD of the block</u>: (impending sliding ***up*** the incline)

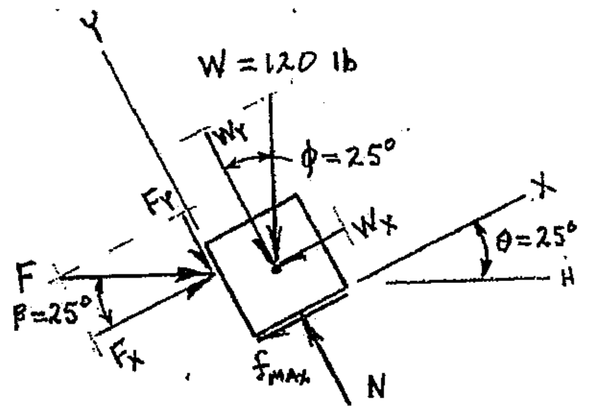

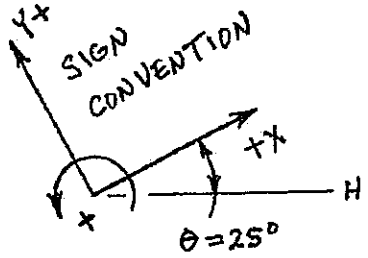

There are three unknowns on this free body diagram; P, N, and f_{max}. Keep in mind that at impending motion, $f_{max} = \mu_s(N)$. A good first step would be to develop a force equilibrium equation in the Y-direction.

$$\Sigma F_Y = 0$$
$$0 = \pm N \pm F_Y \pm W_Y$$
$$0 = +N - F(\sin\beta) - W(\cos\phi)$$
$$N = +F(\sin\beta) + W(\cos\phi) \qquad \text{(eq. 1)}$$

Summing forces in the Y-direction yielded an equation that has two unknowns, N and F, shown above as equation 1 (eq. 1). Next, static equilibrium is applied by summing forces in the X-direction:

$$\Sigma F_X = 0$$
$$0 = \pm F_X \pm W_X \pm f_{max}$$
$$0 = +F(\cos\beta) - W(\sin\phi) - f_{max}$$
$$f_{max} = +F(\cos\beta) - W(\sin\phi) \qquad \text{(eq. 2)}$$

Summing forces in the X-direction equal to zero also yielded an equation that has two unknowns, f_{max} and F, and at first glance they do not appear to be the same unknowns as those shown in equation 1 (eq. 1). However, remember that at impending motion friction is at its maximum, and $f_{max} = \mu_s(N)$. So, if $\mu_s(N)$ were substituted for f_{max} in equation 2, then you would be left with two equations that have the same two unknowns (N and F), which is a system of equations that can be solved

by several methods. Since the problem statement asked for the value of the horizontal force F, the two equations could be combined such that (F) is the only unknown.

$$f_{max} = +F(\cos\beta) - W(\sin\phi) \qquad \text{(eq. 2)}$$

$$\mu_s(N) = +F(\cos\beta) - W(\sin\phi) \qquad \text{(from: } f_{max} = \mu_s N\text{)}$$

Now, substitute for **N** using eq. 1: $N = +F(\sin\beta) + W(\cos\phi)$ (eq.1)

$$\mu_s\left[+F(\sin\beta) + W(\cos\phi)\right] = +F(\cos\beta) - W(\sin\phi)$$

$$\mu_s F(\sin\beta) + \mu_s W(\cos\phi) = +F(\cos\beta) - W(\sin\phi)$$

$$\mu_s F(\sin\beta) - F(\cos\beta) = -W(\sin\phi) - \mu_s W(\cos\phi)$$

$$F\left[+\mu_s(\sin\beta) - (\cos\beta)\right] = -W(\sin\phi) - \mu_s W(\cos\phi)$$

$$F = \frac{-W(\sin\phi) - \mu_s W(\cos\phi)}{+\mu_s(\sin\beta) - (\cos\beta)}$$

$$F = \frac{-(120\text{ lb})(\sin 25^0) - (0.22)(120\text{ lb})(\cos 25^0)}{+(0.22)(\sin 25^0) - (\cos 25^0)}$$

$$F = +91.7716\text{ lb}$$

$$F = \underline{\underline{91.7716\text{ lb} \;\rightarrow}}$$

The answer for Example 15-2 is shown in the box below:

Answer:
For impending sliding up the incline:
F = 91.77 lb →

It is very important to remember that at the point of impending motion (and ***only*** at the point of impending motion) the maximum static friction force is always $f_{max} = \mu_s(N)$. The substitution of $\mu_s(N)$ for f_{max} is VERY common in static friction problems where an object is at the point of impending motion (sliding).

Example 15-3 A 210-lb rectangular block rests on a 20^0 inclined plane as shown below. The coefficient of static friction is $\mu_s = 0.32$. Calculate the maximum value of the applied force (F) that would allow the block to remain in static equilibrium. The block could either slide or tip.

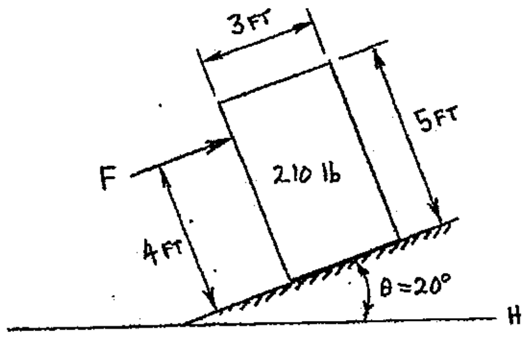

This is another problem that will be solved at the point of impending motion (both sliding and tipping motion). Impending motion is implied in any problem statement that requires you to determine a maximum (or minimum) force that can be applied to an object without causing motion. Since the block could either slide or tip, a free body diagram will be constructed and evaluated for each case. The maximum force (F) is required, and the direction and sense of F are given, so the relative motion of the block is ***up*** the incline and the sense of the friction force will then be down the incline (friction always opposes relative motion).

FBD of the block #1: (impending sliding **up** the incline)

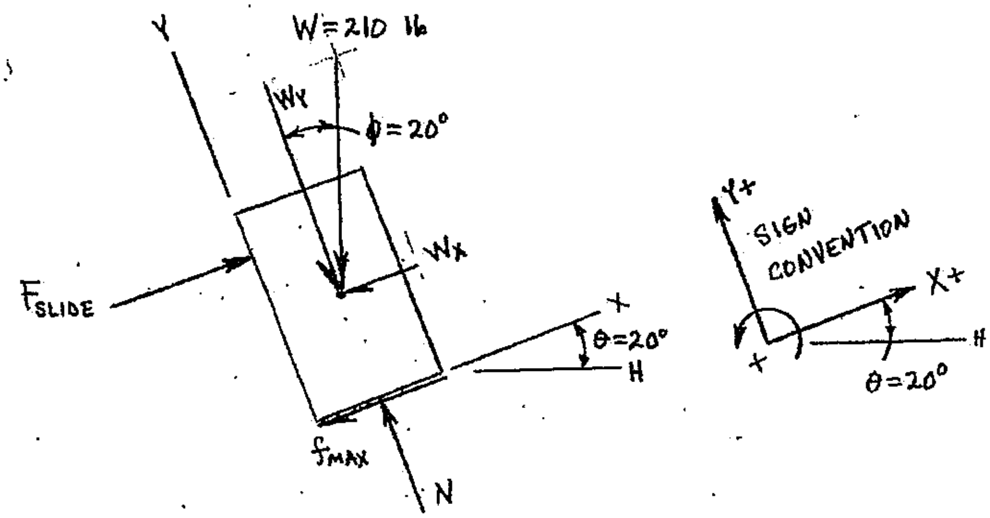

cont'd.

Example 15-3: (cont'd.)

Applying static equilibrium in the Y-direction to determine the normal force:

$$\Sigma F_Y = 0$$
$$0 = \pm N \pm W_Y$$
$$0 = +N - W(\cos\phi)$$
$$N = +W(\cos\phi)$$
$$N = +210\ \text{lb}\left(\cos 20^\circ\right)$$
$$N = +197.3355\ \text{lb}$$
$$\underline{\underline{N = 197.3355\ \text{lb}}} \quad 70^\circ$$

Applying static equilibrium in the X-direction to determine the force (F_{slide}) required so that the block is at impending motion (sliding):

$$\Sigma F_X = 0$$
$$0 = \pm F_{slide} \pm W_X \pm f_{max}$$
$$0 = +F_{slide} - W(\sin\phi) - f_{max} \qquad \text{and} \quad f_{max} = \mu_s(N) \qquad \text{(at impending motion)}$$
$$F_{slide} = +W(\sin\phi) + \mu_s(N)$$
$$F_{slide} = +210\ \text{lb}\left(\sin 20^\circ\right) + (0.32)(197.3355\ \text{lb})$$
$$F_{slide} = +71.8242\ \text{lb} + 63.1474\ \text{lb}$$
$$F_{slide} = +134.972\ \text{lb}$$
$$F_{slide} = \underline{\underline{134.972\ \text{lb}}} \quad 20^\circ$$

Next, a free body diagram of the block is constructed for the impending tipping condition (FBD #2, following page). The block would tend to tip (rotate) about its lower right hand corner (point A on the FBD), so the normal and friction forces are shown applied at point A. A value of the applied force for the tipping condition (F_{tip}) is then calculated using a moment equilibrium equation developed with respect to point A.

cont'd.

Example 15-3: (cont'd.)

FBD of the block #2: (impending tipping; would tend to rotate about point A)

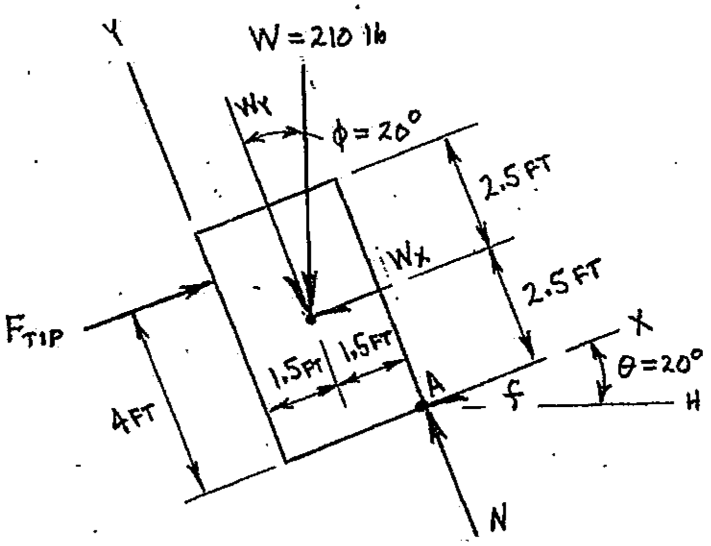

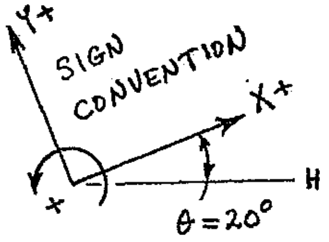

$$\Sigma M_A = 0$$

$$0 = \pm\left[F_{tip}(d_\perp)\right] \pm \left[W_Y(d_\perp)\right] \pm \left[W_X(d_\perp)\right]$$

$$0 = -\left[F_{tip}(4\text{ ft})\right] + \left[W(\cos\phi)(1.5\text{ ft})\right] + \left[W(\sin\phi)(2.5\text{ ft})\right]$$

$$F_{tip} = \frac{+\left[W(\cos\phi)(1.5\text{ ft})\right] + \left[W(\sin\phi)(2.5\text{ ft})\right]}{4\text{ ft}}$$

$$F_{tip} = \frac{+\left[(210\text{ lb})(\cos 20^0)(1.5\text{ ft})\right] + \left[(210\text{ lb})(\sin 20^0)(2.5\text{ ft})\right]}{4\text{ ft}}$$

$$F_{tip} = +118.891\text{ lb}$$

$$F_{tip} = 118.891\text{ lb} \quad \angle 20° \text{ H}$$

The maximum value for the applied force (F_{max}) can now be determined. Since F_{tip} is less than F_{slide}, the block would tip before it slides. So, the value for F_{tip} becomes the maximum force that could be applied to the block if the block is to remain in static equilibrium. The answer for Example 15-3 is shown in the box below:

> Answer:
>
> $F_{max} = F_{tip} = 118.9\text{ lb}$ $\angle 20°$ H

MULTI-SURFACE FRICTION

The term multi-surface friction refers to any object or system that has two or more friction surfaces. Consider the system of blocks shown in Figure 15-6. There are three contact surfaces in the system; one where block A contacts the vertical wall, the second at the contact surface between blocks A and B, and the third where block B contacts the horizontal surface. However, friction will only develop on/along two of the surfaces since there will be no relative motion between block A and the vertical wall. Friction will occur on the surface between blocks A and B, and also between block B and the horizontal surface.

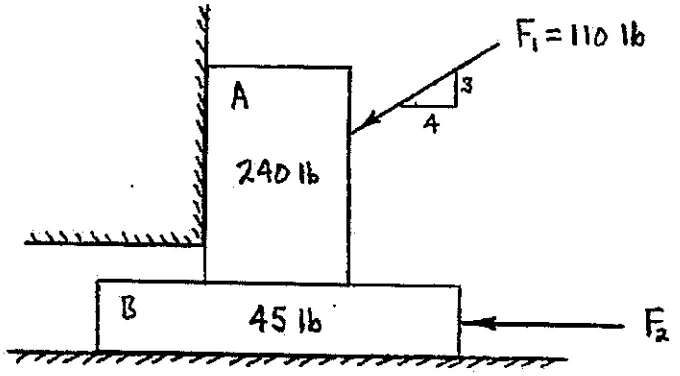

FIGURE 15-6 System of two blocks, loaded as shown

There can be a different coefficient of static friction at each friction surface, depending on the materials in contact at each surface. So, a reasonable practice is to number the various contact surfaces, and then subscript the coefficients of static friction and the normal and friction forces that develop at/on each surface. Free body diagrams are constructed for each object in the system and all acting forces and reactions (normal and friction forces) must be correctly shown. The friction and normal forces at/on a contact surface must be transferred from one object to another as EQUAL BUT OPPOSITE (equal magnitude but opposite sense) forces.

Remember, at impending motion all friction forces will be at their maximum magnitude ($f_{max} = \mu_s N$). The sense of the maximum friction forces will be KNOWN (from given information) because friction must oppose relative motion (or the tendency for relative motion). The senses of all maximum friction forces must be shown correctly on all free body diagrams (you can NOT *assume* a sense for f_{max} on multi-surface friction problems that are solved at impending motion).

Example 15-4 (following page) is used to show a typical solution procedure for a multi-surface friction problem.

Example 15-4: A system of two blocks is loaded as shown below. Determine the horizontal force F_2 that would be required to cause impending sliding of block B (to the left). The coefficient of static friction is 0.24 between blocks A and B, and 0.32 between block B and the horizontal surface.

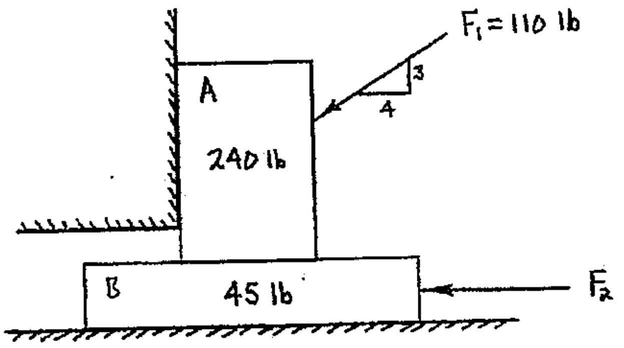

For this example, the contact surfaces will be numbered as follows:

- #1 contact between block A and the vertical wall
- #2 contact between blocks A and B
- #3 contact between block B and the horizontal surface

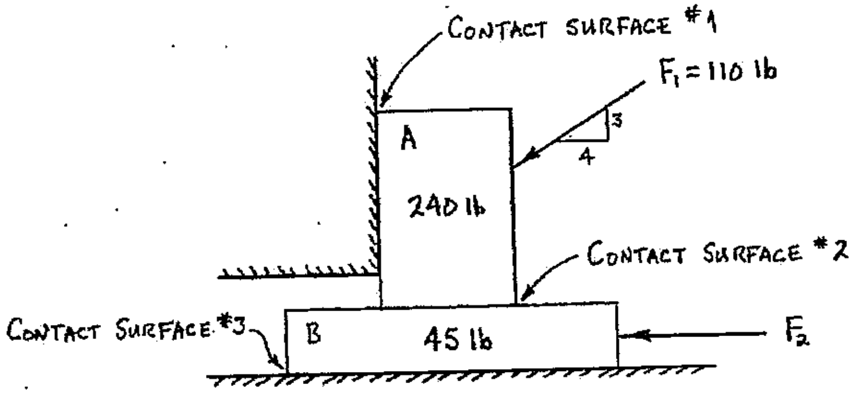

The relative motion (or the tendency for relative motion) between objects at each contact surface must now be determined. Block B is to be at impending sliding to the left, per the problem statement. Since the relative motion of block B (with respect to block A) is to the left, the friction forces acting on each friction surface of block B must have a SENSE DIRECTED TO THE RIGHT (friction always opposes motion, or the tendency for motion).

The relative motion of block A (with respect to block B) is to the right. Or, block A tends to move to the right relative to block B. So, the sense of the friction force acting on block A must have a SENSE DIRECTED TO THE LEFT at the contact surface between the two blocks.

Example 15-4: (cont'd.)

Free body diagrams for blocks A and B are shown below. Components of force F_1 have not been shown, but may still be used in the numerical solution. It is important to note that the free body diagrams were actually constructed one at a time, and the FBD of block A was constructed first. The direction and sense of forces N_2 and f_{max2} were established on the FBD of block A at contact surface #2 (the contact surface between the two blocks). Then forces N_2 and f_{max2} were transferred to the FBD of block B with equal magnitude but <u>OPPOSITE SENSE</u>.

<u>FBDs OF BLOCKS A AND B</u>: block A – impending sliding to right
block B – impending sliding to left

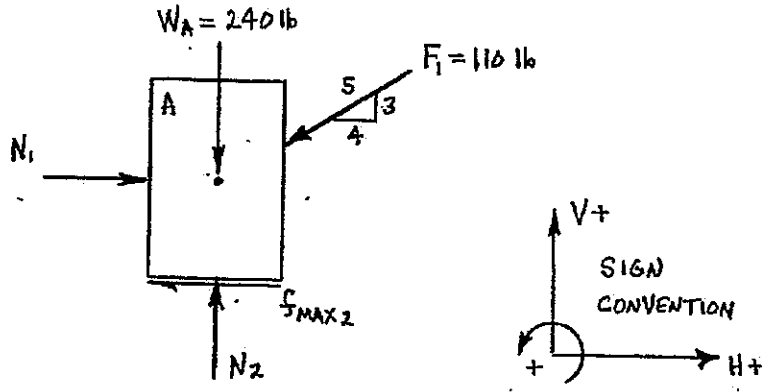

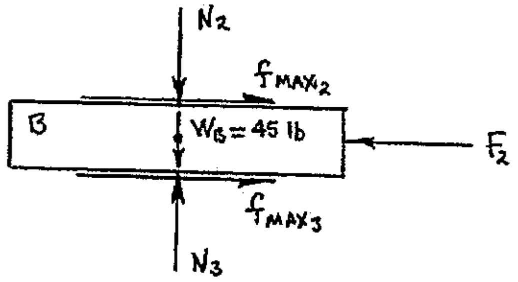

The correct sense for N_2 and f_{max2} on block B could also have been determined by evaluating only block B. Since block B is at the point of impending sliding to the left, the sense of f_{max2} on block B must be to the right (friction always opposes motion, or the tendency for motion). Normal forces must always be shown as pushing on the contact surface.

A starting point for the numerical solution must be determined after constructing the free body diagrams of each block. Although force F_2 is being sought, there are too many unknowns (four unknowns) on the FBD of block B and at this point there are no known force magnitudes on the FBD of block B. There are only three unknowns on the FBD of block A (N_1, N_2 and f_{max2}) and only N_2 and f_{max2} will be required since they can be transferred to the FBD of block B once their magnitudes have been found.

Example 15-4: (cont'd.)

Determine normal force N_2 using the free body diagram of block A (applying static equilibrium by summing forces in the V-direction):

$$\Sigma F_V = 0$$
$$0 = \pm W_A \pm F_{1V} \pm N_2$$
$$0 = -W_A - \left(\frac{3}{5}\right)F_1 + N_2$$
$$N_2 = +W_A = \left(\frac{3}{5}\right)F_1$$
$$N_2 = +240\text{ lb} + \left(\frac{3}{5}\right)(110\text{ lb})$$
$$N_2 = +306.000\text{ lb}$$
$$N_2 = \underline{\underline{306.000\text{ lb} \uparrow}} \qquad \text{(acting on block A)}$$

f_{max2} can now be calculated since block A is at impending motion:

$$f_{max2} = \mu_{s2} N_2 \qquad \text{and:} \quad \mu_{s2} = 0.24$$
$$f_{max2} = (0.24)(306.0\text{ lb})$$
$$f_{max2} = \underline{\underline{73.4400\text{ lb} \leftarrow}} \qquad \text{(acting on block A)}$$

The magnitudes of N_2 and f_{max2} are now known, and can be used in equilibrium equations that are developed using the free body diagram of block B. Note that N_2 and f_{max2} were applied with equal magnitude but opposite sense on the FBD of block B. The senses shown for N_2 and f_{max2} on the FBD of block B are used in all equilibrium equations developed for block B. Determine normal force N_3 using the free body diagram of block B (applying static equilibrium by summing forces in the V-direction):

$$\Sigma F_V = 0$$
$$0 = \pm N_2 \pm W_B \pm N_3$$
$$0 = -N_2 - W_B + N_3$$
$$N_3 = +N_2 + W_B$$
$$N_3 = +306.0\text{ lb} + 45\text{ lb}$$
$$N_3 = +351.0\text{ lb}$$
$$N_3 = \underline{\underline{351.0\text{ lb} \uparrow}} \qquad \text{(acting on block B)}$$

cont'd.

Example 15-4: (cont'd.)

Since block B is at impending motion (sliding) to the left, friction force f_{max3} can now be determined:

$$f_{max3} = \mu_{s3} N_3 \qquad \text{and:} \quad \mu_{s3} = 0.32$$

$$f_{max3} = (0.32)(351.0\ \text{lb})$$

$$f_{max3} = \underline{\underline{112.320\ \text{lb}\ \rightarrow}} \qquad \text{(acting on block A)}$$

Applied force F_2 can now be found using the free body diagram of block B (applying static equilibrium by summing forces in the H-direction):

$$\Sigma F_H = 0$$

$$0 = \pm f_{max2} \pm f_{max3} \pm F_2$$

$$0 = + f_{max2} + f_{max3} - F_2$$

$$F_2 = + f_{max2} + f_{max3}$$

$$F_2 = + 73.4400\ \text{lb} + 112.320\ \text{lb}$$

$$F_2 = + 185.760\ \text{lb}$$

$$F_2 = \underline{\underline{185.760\ \text{lb}\ \leftarrow}}$$

<u>Answer</u>:
F_2 = 185.8 lb ←

<u>WEDGES</u>

A wedge is a piece of material (normally metal) that is tapered on one or both sides. Wedges are sometimes used to either position, level or lift large heavy objects. Any actual movement caused by wedges tends to be very small compared to the size or weight of the object to be moved. The weight of a wedge is normally very small (compared to the object being "moved" by the wedge), and is usually neglected in problem solutions.

Wedges are typically evaluated at impending motion to determine either the force(s) required for impending motion, or the amount of weight that can be "moved" (put at impending motion) when a known force is applied to a wedge. Wedges always have multiple friction surfaces, and will be evaluated only at the point of impending motion in this manual. A wedge problem is shown in Example 15-5 (following page).

Example 15-5 Two wedges (A and B) will be used to slightly move a 5000-lb crate, as shown below. The coefficient of static friction is 0.19 for all friction surfaces. Determine the force (F) that is required to cause impending motion of the crate (to the right). Neglect the weight of the wedges.

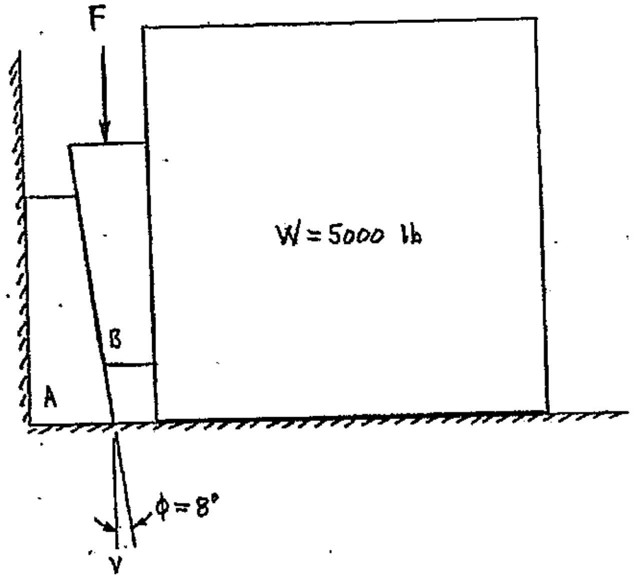

The solution for a problem of this type normally begins with a free body diagram of the object in the system that has the most KNOWN information (in this case, the crate since its weight is known). A free body diagram of the crate is shown below. The friction force acting on the bottom of the crate has sense to the left, since impending motion (sliding) of the crate is to the right. The friction force acting on the left (vertical) edge of the crate has a downward sense because the relative motion of the crate (with respect to wedge B) is upward. Normal forces are shown acting on each contact surface.

FBD OF CRATE: impending motion (sliding) to the right

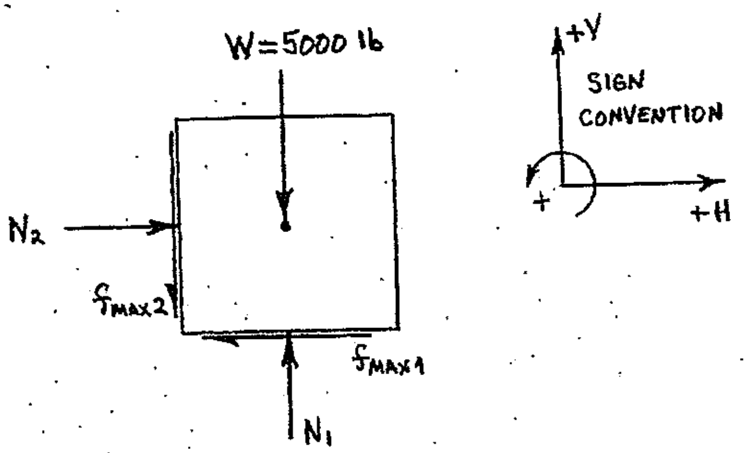

cont'd.

Example 15-5: (cont'd.)

Force equilibrium equations can now be developed for both the horizontal and vertical directions. Applying static equilibrium by summing forces in the horizontal direction:

$$\Sigma F_H = 0$$
$$0 = \pm N_2 \pm f_{max1}$$
$$0 = +N_2 - f_{max1} \qquad \underline{\text{and}}: \quad f_{max1} = \mu_s N_1 \qquad \text{(@ impending motion)}$$
$$0 = +N_2 - \mu_s N_1$$
$$N_2 = +\mu_s N_1 \qquad \text{(eq.1)}$$

Applying static equilibrium by summing forces in the vertical direction:

$$\Sigma F_V = 0$$
$$0 = \pm f_{max2} \pm W \pm N_1$$
$$0 = -f_{max2} - W + N_1 \qquad \underline{\text{and}}: \quad f_{max2} = \mu_s N_2 \qquad \text{(@ impending motion)}$$
$$0 = -\mu_s N_2 - W + N_1$$
$$N_1 = +\mu_s N_2 + W \qquad \text{(eq.2)}$$

Now solve for normal force N_2 by substituting equation 2 into equation 1:

$$N_2 = +\mu_s N_1 \qquad \text{(eq.1)}$$
$$N_2 = +\mu_s(+\mu_s N_2 + W)$$
$$N_2 = +\mu_s^2 N_2 + \mu_s W$$
$$N_2 - \mu_s^2 N_2 = +\mu_s W$$
$$N_2(1 - \mu_s^2) = +\mu_s W$$
$$N_2 = \frac{+\mu_s W}{(1 - \mu_s^2)}$$
$$N_2 = \frac{+(0.19)(5000\text{ lb})}{\left[1 - (0.19)^2\right]}$$
$$N_2 = +985.579\text{ lb}$$
$$N_2 = \underline{\underline{985.579\text{ lb} \rightarrow}} \qquad \text{(acting on the crate)}$$

cont'd.

Example 15-5: (cont'd.)

The maximum static friction force acting on the left vertical surface of the crate is:

$$f_{max2} = \mu_s N_2$$
$$f_{max2} = (0.19)(985.567 \text{ lb})$$
$$f_{max2} = \underline{\underline{187.260 \text{ lb} \downarrow}} \qquad \text{(acting on the crate)}$$

A free body diagram of wedge B is shown below. Forces N_2 and f_{max2} are shown acting with equal magnitude but opposite sense relative to the FBD of the crate.

<u>FBD OF WEDGE B</u>: impending motion (sliding) down

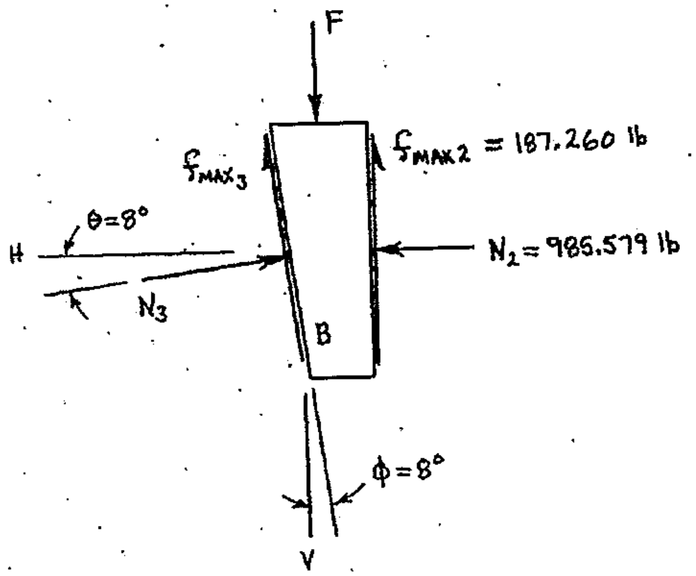

Applying static equilibrium by summing forces in the horizontal direction:

$$\Sigma F_H = 0$$
$$0 = \pm N_{3H} \pm f_{max3H} \pm N_2$$
$$0 = +N_3 \cos\theta - f_{max3} \sin\phi - N_2 \qquad \underline{\text{and}}: \quad f_{max3} = \mu_s N_3 \qquad \text{(@ impending motion)}$$
$$0 = +N_3 \cos\theta - \mu_s N_3 \sin\phi - N_2$$
$$+\mu_s N_3 \sin\phi - N_3 \cos\theta = -N_2$$
$$N_3 (+\mu_s \sin\phi - \cos\theta) = -N_2$$
$$N_3 = \frac{-N_2}{(+\mu_s \sin\phi - \cos\theta)}$$

<u>cont'd.</u>

Example 15-5: (cont'd.)

$$N_3 = \frac{-N_2}{(+\mu_s \sin\phi - \cos\theta)}$$

$$N_3 = \frac{-(+985.579\ \text{lb})}{\left[+(0.19)(\sin 8^0) - (\cos 8^0)\right]}$$

$$N_3 = +1022.57\ \text{lb}$$

$$N_3 = \underline{\underline{1022.57\ \text{lb}}} \quad \text{(acting on wedge B)}$$

The maximum static friction force acting on the contact surface between wedges A and B is:

$$f_{max3} = \mu_s N_3$$

$$f_{max3} = (0.19)(1022.57\ \text{lb})$$

$$f_{max3} = \underline{\underline{194.288\ \text{lb}}} \quad \text{(acting on wedge B)}$$

Applying static equilibrium by summing forces in the vertical direction:

$$\Sigma F_V = 0$$

$$0 = \pm f_{max3V} \pm N_{3V} \pm F \pm f_{max2}$$

$$0 = +f_{max3}\cos\phi + N_3 \sin\theta - F + f_{max2}$$

$$F = +f_{max3}\cos\phi + N_3 \sin\theta + f_{max2}$$

$$F = +(194.288\ \text{lb})(\cos 8^0) + (+1022.57\ \text{lb})(\sin 8^0) + 187.26\ \text{lb}$$

$$F = +521.971\ \text{lb}$$

$$F = \underline{\underline{521.971\ \text{lb}\ \downarrow}}$$

<u>Answer</u>:

F = 522.0 lb ↓

SUMMARY

Friction is a resistance to motion in a direction parallel to two contact surfaces which are under pressure. Friction is modeled as a force, with magnitude, direction, sense and a point of application. Friction is a reactive force, so the magnitude of a static friction force can be whatever is required for static equilibrium, from zero to a maximum ($f_{max} = \mu_s(N)$ at the point of impending motion (the edge of static equilibrium). If the friction force required for static equilibrium is higher than the maximum available friction force, then the object in question is moving and the kinetic friction force must be calculated from the equation $f_k = \mu_k(N)$.

An object that is at the point of impending motion can be at either impending sliding or impending tipping. If not specified, then both cases must be checked to determine if and how an object might move.

Remember that since $f_{max} = \mu_s(N)$ at impending motion (and ***only*** at impending motion), the substitution of $\mu_s(N)$ for f_{max} is very common in problem solutions.

FURTHER EXAMPLE PROBLEMS (solutions in GFSA format are on the following pages)

Example 15-6 A 180-lb block on an incline is loaded as shown below. The coefficient of static friction is 0.24, and the coefficient of kinetic friction is 0.18. Determine the actual friction force acting on the block.

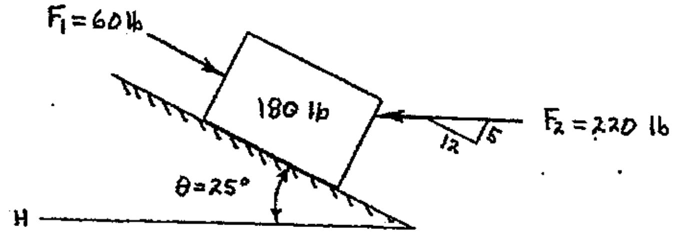

Example 15-7 Blocks A and B shown below are connected with a cable that passes over a pulley at location C. Neglect any friction at the pulley. Block A weights 100 lb, and the coefficients of static friction between the blocks and their supporting surfaces are shown below. Calculate the minimum weight of block B required to maintain static equilibrium.

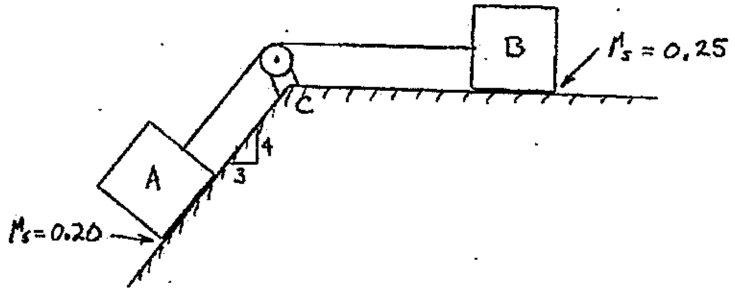

Example 15-8 A beam is loaded as shown below. The beam is supported by a pin at location A and rests on a wedge at location B. The wedge is supported by a horizontal surface. The coefficients of static friction are 0.21 between the wedge and the beam, and 0.25 between the wedge and the horizontal surface. Determine the force F2 required to slightly lift the beam (impending lifting of the beam).

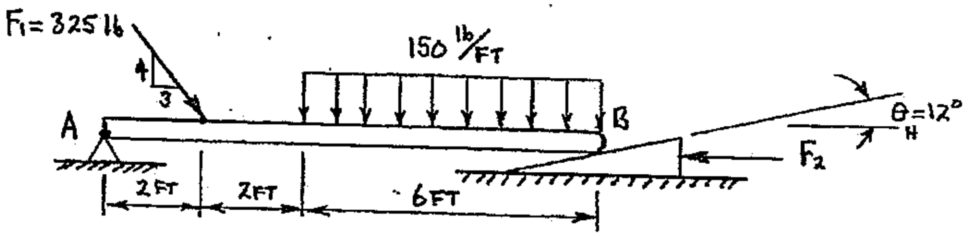

PROBLEM: EXAMPLE 15-6

GIVEN: A BLOCK ON AN INCLINE IS LOADED AS SHOWN BELOW. THE COEFFICIENTS OF FRICTION BETWEEN THE BLOCK AND INCLINE ARE $\mu_s = 0.24$ AND $\mu_k = 0.18$. THE BLOCK WEIGHS 180 lb.

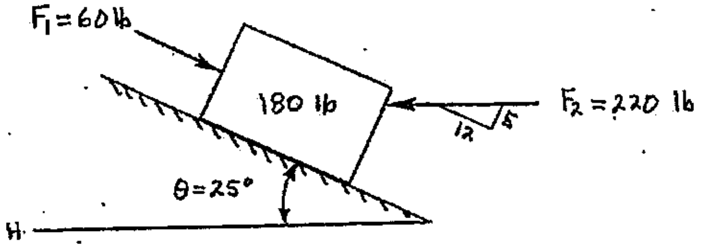

FIND: DETERMINE THE ACTUAL FRICTION FORCE ACTING ON THE BLOCK.

SOLUTION:

FBD OF BLOCK: (SENSE OF f_{REQD} HAS BEEN ASSUMED)

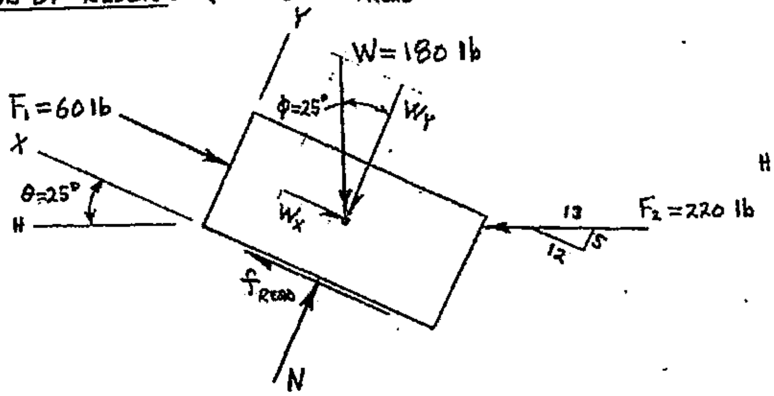

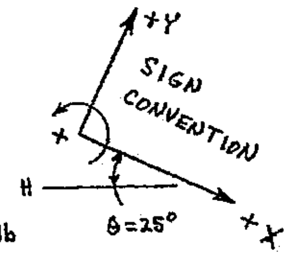

APPLYING STATIC EQUILIBRIUM BY SUMMING FORCES IN THE X-DIRECTION:

$$\Sigma F_X = 0$$

$$0 = \pm F_{1X} \pm W_X \pm f_{REQD} \pm F_{2X}$$

$$0 = +F_1 + W \sin\phi - f_{REQD} - \left(\tfrac{12}{13}\right) F_2$$

$$f_{REQD} = +F_1 + W \sin\phi - \left(\tfrac{12}{13}\right) F_2$$

$$f_{REQD} = +60\text{ lb} + (180\text{ lb})(\sin 25°) - \left(\tfrac{12}{13}\right)(220\text{ lb})$$

$$f_{REQ'D} = -67.0056\text{ lb}$$

$$f_{REQD} = \underline{\underline{67.0056\text{ lb}}} \quad \text{(directed down the incline, } 25° \text{ below H)}$$

CONT'D.

PROBLEM: EXAMPLE 15-6 (CONT'D.)

DETERMINE THE NORMAL FORCE, N:

$$\Sigma F_Y = 0$$

$$0 = \pm N \pm W_Y \pm F_{2Y}$$

$$0 = +N - W\cos\phi - (5/13)F_2$$

$$N = +W\cos\phi + (5/13)F_2$$

$$N = +(180\ \text{lb})(\cos 25°) + (5/13)(220\ \text{lb})$$

$$N = +247.751\ \text{lb}$$

$$N = 247.751\ \text{lb} \quad \angle 65° \text{ (from H)}$$

DETERMINE THE MAXIMUM STATIC FRICTION FORCE: (f_{MAX} @ IMPENDING MOTION)

$$f_{MAX} = \mu_s N \qquad (\text{AND: } \mu_s = 0.24)$$

$$f_{MAX} = (0.24)(247.751\ \text{lb})$$

$$f_{MAX} = 59.4602\ \text{lb} \quad 25° \text{ below H}$$

COMPARE f_{REQD} VS. f_{MAX}:

$$f_{REQD} = 67.0056\ \text{lb} \quad 25° \text{ below H}$$

$$\text{FRICTION} = \begin{cases} f_{MAX} = 59.4602\ \text{lb} \quad 25° \text{ below H} \\ f = 0 \end{cases}$$

SINCE $f_{REQD} > f_{MAX}$, BLOCK IS SLIDING/MOVING UP THE INCLINE.

SO, MUST CALCULATE KINETIC FRICTION FORCE, f_K.

CONT'D.

PROBLEM: EXAMPLE 15-6 (CONT'D.)

DETERMINE THE KINETIC FRICTION FORCE, f_K:

$f_K = \mu_K N$ (AND: $\mu_K = 0.18$)

$f_K = (0.18)(247.751 \text{ lb})$

$f_K = 44.5952 \text{ lb}$

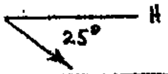

SINCE BLOCK IS MOVING/SLIDING:

$f_{ACTING} = f_K = 44.5952 \text{ lb}$

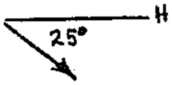

ANSWER:

$f_{ACTING} = 44.60 \text{ lb}$

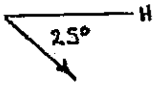

PROBLEM: EXAMPLE 15-7

GIVEN: BLOCKS A AND B SHOWN BELOW ARE CONNECTED WITH A CABLE THAT PASSES OVER A PULLEY AT LOCATION C. NEGLECT ANY FRICTION AT THE PULLEY. BLOCK A WEIGHS 100 lb, AND THE COEFFICIENTS OF STATIC FRICTION BETWEEN THE BLOCKS AND THEIR SUPPORTING SURFACES ARE SHOWN BELOW.

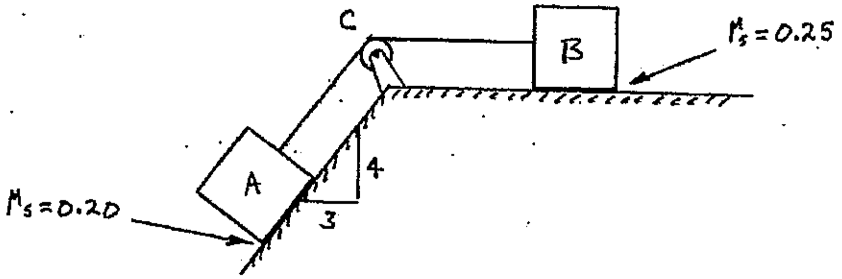

FIND: CALCULATE THE MINIMUM WEIGHT OF BLOCK B REQUIRED TO MAINTAIN STATIC EQUILIBRIUM.

SOLUTIONS:

FBD OF BLOCK A: (IMPENDING SLIDING DOWN THE INCLINE)

T = CABLE TENSION

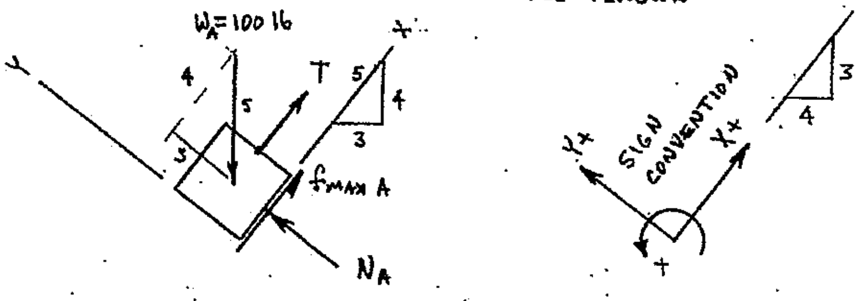

$\Sigma F_Y = 0$

$0 = \pm N_A \pm W_{AY}$

$0 = +N_A - W_A(3/5)$

$N_A = +100 \text{ lb } (3/5)$

$N_A = +60 \text{ lb}$

$N_A = \underline{60 \text{ lb}}$ (4, 3 slope)

CONT'D.

PROBLEM: EXAMPLE 15-7 (CONT'D.)

AT IMPENDING MOTION: $f_{MAX} = \mu_s N$

$f_{MAX\,A} = \mu_s N_A = (0.20)(60\text{ lb}) = \underline{\underline{12\text{ lb}}}$

$\Sigma F_X = 0$ (USING FBD OF BLOCK A)

$0 = \pm T \pm f_{MAX\,A} \pm W_X$

$0 = +T + f_{MAX\,A} - W(4/5)$

$T = -f_{MAX\,A} + W(4/5)$

$T = -12\text{ lb} + (100\text{ lb})(4/5)$

$T = -12\text{ lb} + 80\text{ lb}$

$T = +68\text{ lb}$

$T = \underline{\underline{68\text{ lb (TENSION)}}}$

* CABLE TENSION (T = 68 lb) IS CONSTANT AT ANY LOCATION.

FBD OF BLOCK B: (IMPENDING MOTION TO LEFT)

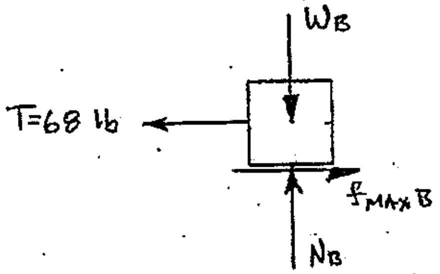

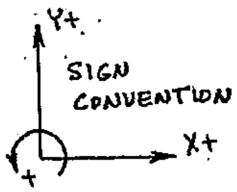

$\Sigma F_Y = 0$

$0 = \pm N_B \pm W_B$

$0 = +N_B - W_B$

$\underline{\underline{N_B = W_B}}$

CONT'D.

PROBLEM: EXAMPLE 15-7 (CONT'D.)

$\Sigma F_x = 0$ (FROM FBD OF BLOCK B)

$0 = \pm T \pm f_{max\,B}$

$0 = -T + f_{max\,B}$

$f_{max\,B} = +T$ AND $f_{max} = \mu_s N$ @ IMPENDING MOTION

$\mu_s N_B = +T$ AND $N_B = W_B$

$\mu_s W_B = +T$

$$W_B = \frac{+T}{\mu_s}$$

$$W_B = \frac{+68\text{ lb}}{0.25}$$

$W_B = +272.00$ lb

$W_B = \underline{\underline{272.0 \text{ lb} \downarrow}}$

ANSWER:

$W_B = 272.0$ lb $\downarrow$

PROBLEM: EXAMPLE 15-8

GIVEN: A BEAM IS LOADED AS SHOWN BELOW. THE BEAM IS SUPPORTED BY A PIN AT A, AND RESTS ON A 12° WEDGE AT B. THE WEDGE IS SUPPORTED BY A HORIZONTAL SURFACE. THE COEFFICIENT OF STATIC FRICTION IS 0.21 BETWEEN THE WEDGE AND THE BEAM. THE COEFFICIENT OF STATIC FRICTION IS 0.25 BETWEEN THE WEDGE AND THE HORIZONTAL SURFACE.

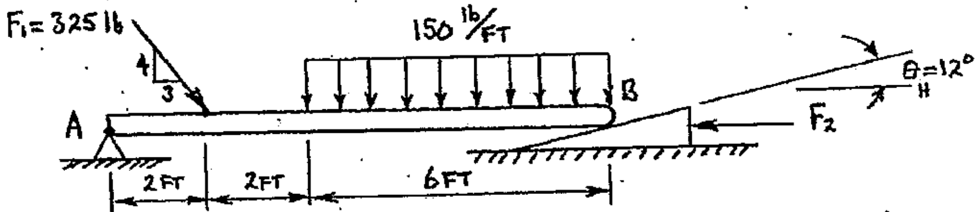

FIND: DETERMINE THE FORCE F_2 REQUIRED TO CAUSE IMPEND LIFTING OF THE BEAM.

SOLUTION:

FBD OF ENTIRE BEAM: (IMPENDING LIFTING)

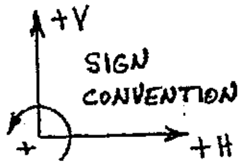

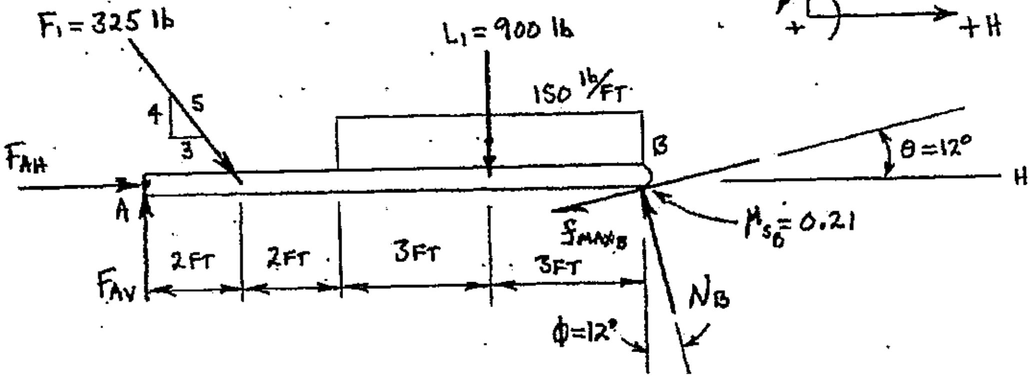

DETERMINE NORMAL FORCE, N_B:

$$\Sigma M_A = 0$$

$$0 = \pm\left[(F_{1V})(d\perp)\right] \pm \left[(L_1)(d\perp)\right] \pm \left[(f_{MAXB_V})(d\perp)\right] \pm \left[(N_{1V})(d\perp)\right]$$

$$0 = -\left[(4/5)(F_1)(2FT)\right] - \left[(L_1)(7FT)\right] - \left[(f_{MAXB})(\sin\theta)(10FT)\right] + \left[(N_1)(\cos\phi)(10FT)\right]$$

AND: $f_{MAXB} = \mu_{SB} N_B$ (@ IMPENDING MOTION)

$$0 = -\left[(4/5)(F_1)(2FT)\right] - \left[(L_1)(7FT)\right] - \left[(\mu_S N_B)(\sin\theta)(10FT)\right] + \left[(N_1)(\cos\phi)(10FT)\right]$$

CONT'D.

PROBLEM: EXAMPLE 15-8 (CONT'D.)

$$+[(N_B)(\cos\phi)(10FT)] - [(\mu_{S_B} N_B)(\sin\theta)(10FT)] = +[(4/5)(F_1)(2FT)] + [(L_1)(7FT)]$$

$$N_B\,[+(\cos\phi)(10FT) - (\mu_{S_B})(\sin\theta)(10FT)] = +[(4/5)(F_1)(2FT)] + [(L_1)(7FT)]$$

$$N_B = \frac{+[(4/5)(F_1)(2FT)] + [(L_1)(7FT)]}{[+(\cos\phi)(10FT) - (\mu_{S_B})(\sin\theta)(10FT)]}$$

$$N_B = \frac{+[(4/5)(325\ lb)(2FT)] + [(900\ lb)(7FT)]}{[+(\cos 12^\circ)(10FT) - (0.21)(\sin 12^\circ)(10FT)]}$$

$$N_B = +\ 729.813\ lb$$

$N_B = 729.813\ lb$ H 78° (APPLIED ON BEAM @ B)

MAXIMUM STATIC FRICTION FORCE BETWEEN BEAM AND WEDGE: $\mu_{S_B} = 0.21$

$$f_{MAX_B} = \mu_{S_B} N_B$$

$$f_{MAX_B} = (0.21)(729.813\ lb)$$

$f_{MAX_B} = 153.261\ lb$ H 12° (APPLIED ON BEAM @ B)

FBD OF WEDGE: (IMPENDING SLIDING TO LEFT)

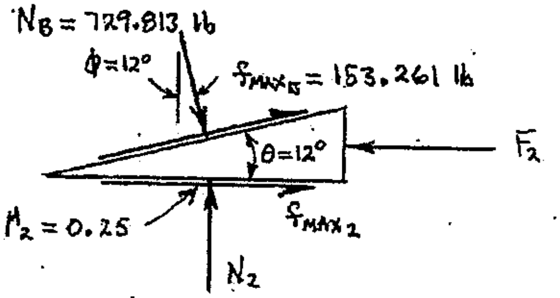

DETERMINE NORMAL FORCE, N_2:

$$\Sigma F_V = 0$$

$$0 = \pm N_{B_V} \pm f_{MAX\,B_V} \pm N_2$$

$$0 = -N_B \cos\phi + f_{MAX_B}(\sin\theta) + N_2$$

CONT'D.

PROBLEM: EXAMPLE 15-8 (CONT'D.)

$N_2 = +N_B(\cos\phi) - f_{MAX_B}(\sin\theta)$

$N_2 = +(729.813\text{ lb})(\cos 12°) - (153.261\text{ lb})(\sin 12°)$

$N_2 = +682.000\text{ lb}$

$N_2 = \underline{682.0\text{ lb}\ \uparrow}$ (APPLIED ON WEDGE)

MAXIMUM STATIC FRICTION FORCE BETWEEN WEDGE AND HORIZONTAL SURFACE:

$f_{MAX_2} = \mu_{S_2} N_2$ AND: $\mu_{S_2} = 0.25$

$f_{MAX_2} = (0.25)(682.0\text{ lb})$

$f_{MAX_2} = \underline{170.500\text{ lb}\ \longrightarrow}$ (APPLIED ON WEDGE)

DETERMINE FORCE APPLIED TO WEDGE, F_2: (FROM FBD WEDGE)

$\Sigma F_H = 0$

$0 = \pm N_{BH} \pm f_{MAX_{BH}} \pm f_{MAX_2} \pm F_2$

$0 = +N_B(\sin\phi) + f_{MAX_B}(\cos\theta) + f_{MAX_2} - F_2$

$F_2 = +N_B(\sin\phi) + f_{MAX_B}(\cos\theta) + f_{MAX_2}$

$F_2 = +(729.813\text{ lb})(\sin 12°) + (153.261\text{ lb})(\cos 12°) + 170.5\text{ lb}$

$F_2 = +472.149\text{ lb}$

$F_2 = \underline{472.149\text{ lb}\ \longleftarrow}$

ANSWER:

$F_2 = 472.1\text{ lb}\ \longleftarrow$

PRACTICE PROBLEMS

15.1 A force of F = 105-lb will cause impending motion (sliding) of the block ***up*** the incline. The coefficient of static friction between the block and the incline is $\mu_s = 0.21$. Determine the weight (W) of the block.

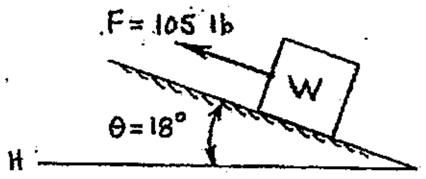

15.2 A 75-lb block rests on a 20^0 incline as shown below. The coefficient of static friction between the block and incline is 0.15, and the coefficient of kinetic friction is 0.12. Applied force F has a horizontal line of action. Determine the actual friction force acting on the block.

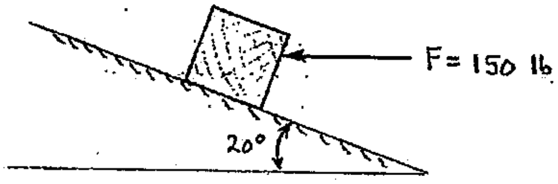

15.3 A 600-lb block rests on a 10^0 incline as shown below. The coefficient of static friction between the block and the incline is $\mu_s = 0.27$. Calculate the horizontal force (F_1) required to cause impending motion (sliding) ***down*** the incline.

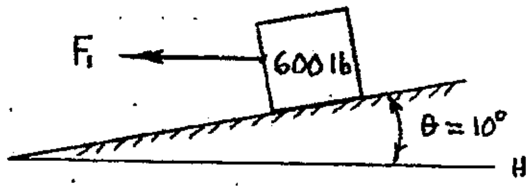

15.4 A 200-lb block rests on a 20^0 incline as shown below. A force (F) is applied to the block in a direction parallel to the incline. The coefficient of static friction between the block and incline is $\mu_s = 0.27$. Calculate the maximum and minimum values for the force (F) for which the block remains in static equilibrium.

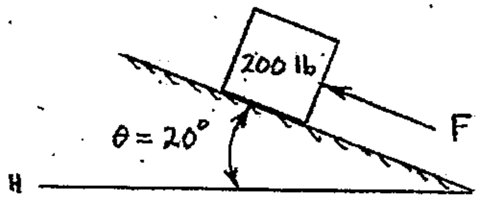

PRACTICE PROBLEMS

15.5 A 300-lb crate is suspended from a cable, and rests against a vertical wall. The cable passes over a pulley that has "frictionless" bearings. Tension in the cable is 425-lb. The coefficients of static and kinetic friction are $\mu_s = 0.18$ and $\mu_k = 0.13$ between the crate and the vertical wall. Determine the actual friction force acting on the crate.

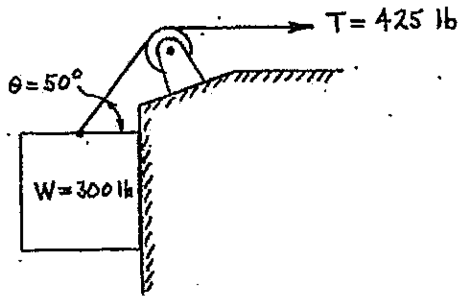

15.6 A 200-lb refrigerator experiences a horizontal force (F = 55 lb) as shown below. The coefficient of static friction between the refrigerator and the floor is 0.30. The weight of the refrigerator is assumed to act through its centroid. Will the refrigerator tip, slide, or remain static?

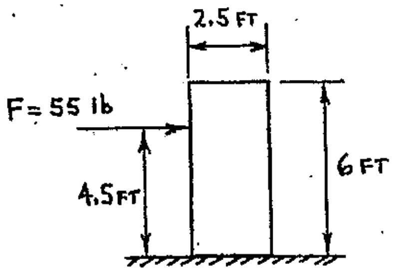

15.7 A mechanism used to stage boxes on an incline is shown below. The coefficient of static friction between the box and the incline is $\mu_s = 0.18$. Determine the minimum force, F, required to hold the box in place (in static equilibrium) on the 35^0 incline.

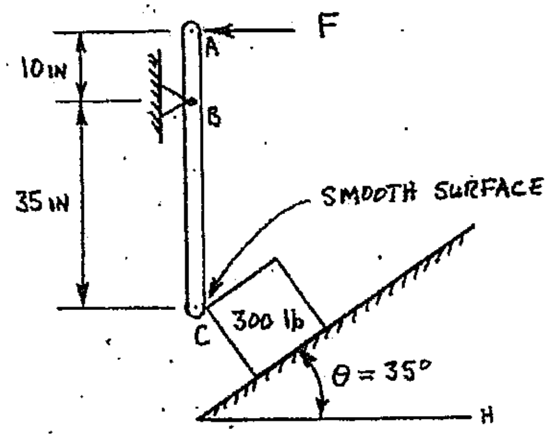

PRACTICE PROBLEMS

15.8 In the figure shown below, block A weighs 200-lb and block B weighs 100-lb. The coefficient of static friction between blocks A and B is 0.25, and the coefficient of static friction between block B and the horizontal surface is 0.10. The sense of the horizontal force F_1 is given (F_1 acts to the right). Determine the maximum value of the horizontal force F_1 that may be applied **without** causing motion. (Block A could move three ways; tip, slide on B, or slide with B).

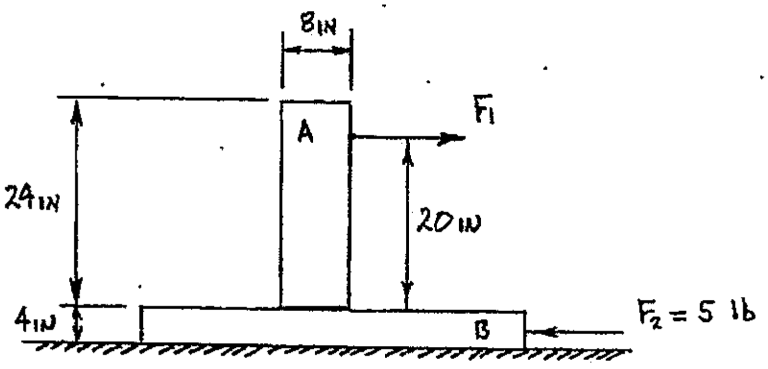

15.9 Block A weighs 240-lb, and is connected to the wall with a cable as shown below. Block B weighs 375-lb. The coefficient of static friction is 0.27 between all surfaces. Determine the horizontal force F required to cause impending motion (to the right) of block B.

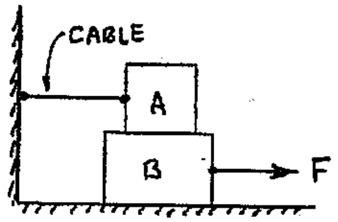

15.10 Two large blocks are loaded as shown below. The coefficient of static friction is 0.34 between blocks A and B, and 0.21 between block B and the horizontal surface. Determine the horizontal force F_2 required to cause impending motion of block B (to the left).

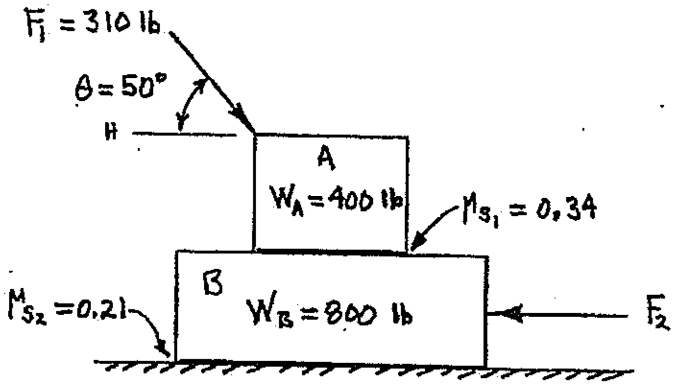

PRACTICE PROBLEMS

15.11 Two blocks are connected via a "weightless" cable that passes around a pulley that has "frictionless" bearings. Block A weights 130-lb. Determine the weight of block B required to cause impending motion of block B down the incline.

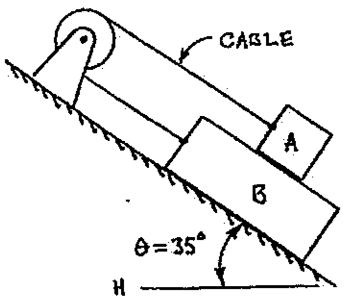

15.12 A large plastic trash can is originally positioned next to a low wall, as shown below. The trash can's total weigh is 72-lb, and its weigh acts vertically downward through its centroid. The trash can is supported by a molded plastic foot at location A, and a wheel at location B; the wheel is free to turn. The coefficient of static friction is 0.26 between the plastic foot and the horizontal surface. During a violent storm, the wind causes a 32 lb/ft distributed load along the exposed upper side of the trash can. Determine if the trash can slides, tips over or remains static during the storm.

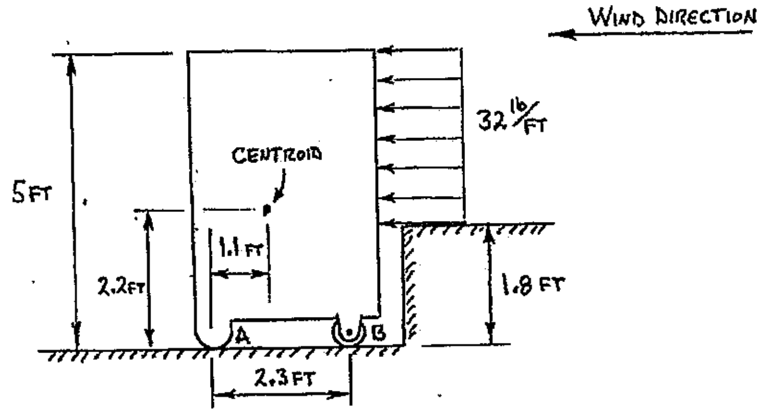

15.13 Two wedges of negligible weight support a force as shown below. Determine the force F_2 required to cause impending motion of wedge B (to the right). The coefficient of static friction is 0.22 between wedge A and the vertical surface, 0.12 between the two wedges, and 0.31 between wedge B and the horizontal surface.

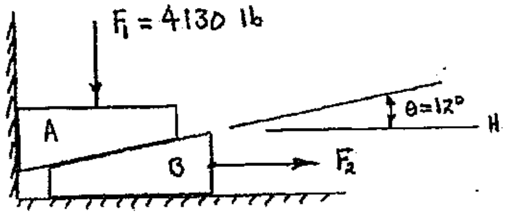

PRACTICE PROBLEMS

15.14 A horizontal beam is loaded as shown below. The beam is supported by two wedges at location A and a pin at location B. The coefficient of static friction is 0.24 for all surfaces. Neglect the weight of the wedges. Determine the horizontal force F required to cause impending motion (to the right) of the lower wedge.

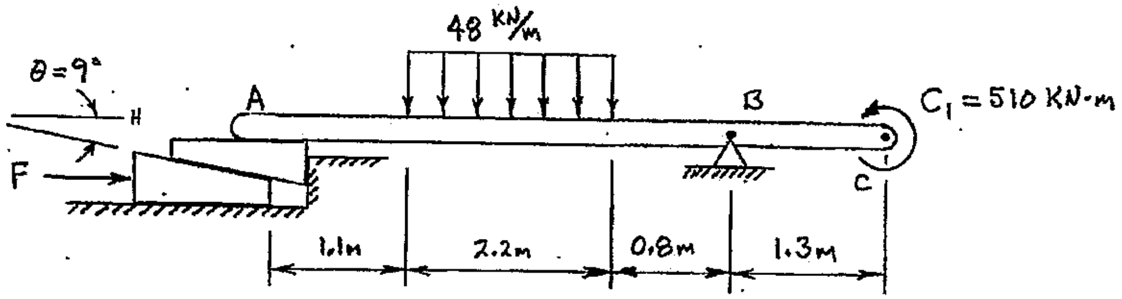

15.15 The V-shaped wedge shown below is used to move the 1200-lb block slightly to the right. The coefficient of static friction is 0.15 at each surface of the wedge, and 0.25 between the block and the horizontal surface. Determine the vertical force F required to cause impending motion of the block. Neglect the weight of the wedge.

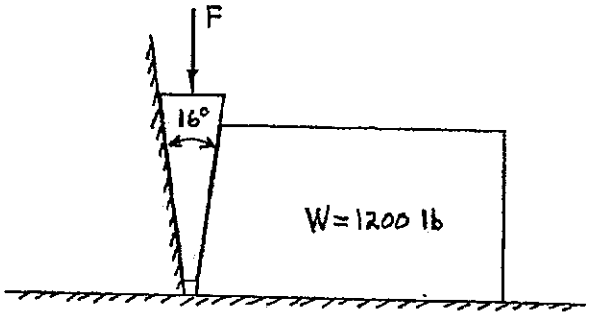

15.16 Two wedges (A and B) will be used to slightly move a 5000-lb crate, as shown below. The coefficient of static friction is 0.19 for all friction surfaces. Determine the force F required to cause impending motion of the crate (to the right). Neglect the weight of the wedges.

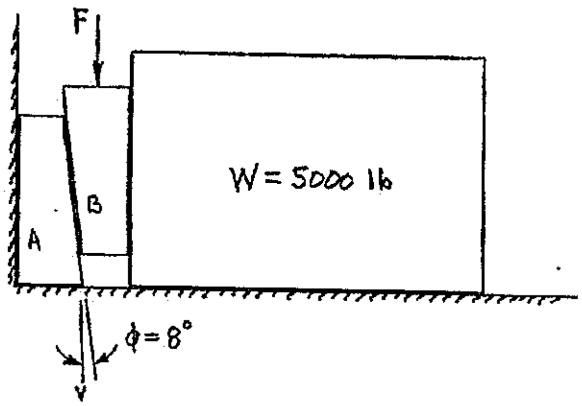

CHAPTER 16: 3-D TOPICS

Methods and techniques to analyze three-dimensional (3-D) forces, moments and 3-D systems in static equilibrium are presented in this chapter. In all previous chapters, objects and systems were modeled as two-dimensional (2-D) since the modeling and analysis of many objects and systems can be very reasonably done in 2-D. However, there exist situations where the only accurate methods for analysis require modeling and evaluating systems in three-dimensional space.

This chapter will be divided into three main sections. Each section covers the following material:

Section 1: 3-D forces
Section 2: 3-D moments
Section 3: Static equilibrium of 3-D systems

SIGN CONVENTION FOR 3-D TOPICS

The axes and sign convention to be used for 3-D topics are shown in Figure 16-1, and will be used consistently throughout this chapter. All sketches will be constructed based on these axes, and the sense of all forces will be established via the sign convention shown below.

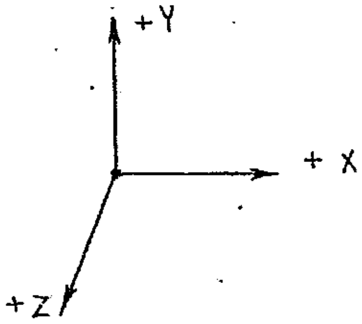

FIGURE 16-1 3-D axes and sign convention

SECTION 1: 3-D FORCES

RESOLVING A 3-D FORCE INTO ITS X, Y AND Z COMPONENTS

Certain situations will require that a 3-D force be resolved into its X, Y and Z components (F_X, F_Y, and F_Z). The methods used to resolve a 3-D force depend on how the force was originally described and/or shown. One method to describe a force in 3-D space is to locate (dimension) the head and tail of the force vector "arrow" with respect to some known reference(s). Both the head and tail of the vector for force F_1 have been dimensioned with respect to the axes of the 3-D coordinate system shown in Figure 16-2 (following page).

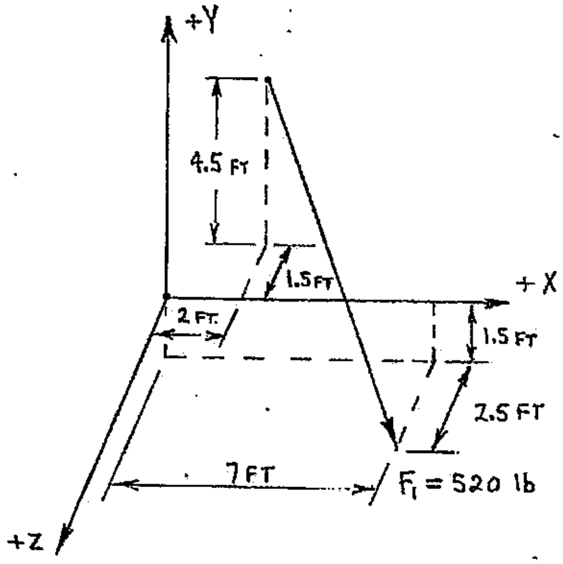

FIGURE 16-2 3-D force F_1

A recommended procedure for resolving a 3-D force into its X, Y and Z components is outlined below.

Procedure:

A) Construct a COMPLETE working diagram (see diagram on page 16-4).
   1) The tail of the force vector (arrow) should be placed at the origin of a 3-D coordinate system. It may be necessary to construct a local 3-D coordinate system (with axes parallel to the given/global 3-D coordinate system) such that the tail of the vector is at the origin of the local 3-D coordinate system.
   2) Construct a rectangular box about the force vector such that the force becomes the box's diagonal. Clearly show/label the box's x, y and z dimensions.
   3) Sketch the X, Y and Z components (F_X, F_Y and F_Z) such that like parts come together at the point of application (tail-on-tail-on-tail-on-tail). Note that the components become the sides of the rectangular box.

B) Determine the X, Y and Z components based on the following:
   1) Calculate the physical length of the box's diagonal (d) as follows:

$$\text{length of box's diagonal} = \sqrt{(\text{x-dimension})^2 + (\text{y-dimension})^2 + (\text{z-dimension})^2}$$

$$d = \sqrt{x^2 + y^2 + z^2}$$

   2) Calculate the magnitude of the force's X-component as follows:

$$F_X = \left(\frac{\text{x-dimension of box}}{\text{length of box's diagonal}}\right)(\text{magnitude of force})$$

$$F_X = \left(\frac{x}{d}\right)(F)$$

3) Calculate the magnitude of the force's Y-component as follows:

$$F_Y = \left(\frac{\text{y-dimension of box}}{\text{length of box's diagonal}}\right)(\text{magnitude of force})$$

$$F_Y = \left(\frac{y}{d}\right)(F)$$

4) Calculate the magnitude of the force's Z-component as follows:

$$F_Z = \left(\frac{\text{z-dimension of box}}{\text{length of box's diagonal}}\right)(\text{magnitude of force})$$

$$F_Z = \left(\frac{z}{d}\right)(F)$$

C) Report the answer for each component completely and correctly. Final answers for components must include magnitude, direction and sense. Direction and sense are shown with an arrow parallel to its corresponding axis on a small version of the 3-D axes used for the problem.

Example 16-1: Determine the X, Y and Z components of force F_1.

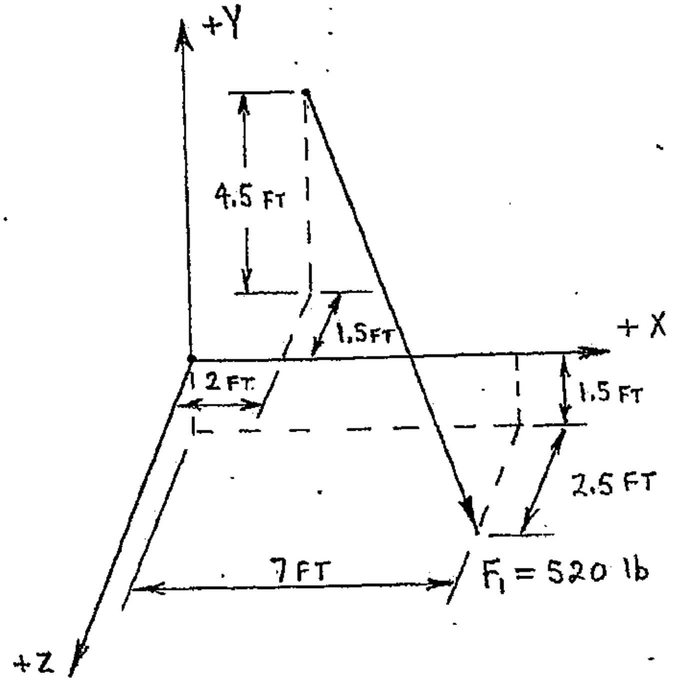

cont'd.

Example 16-1: (cont'd.)

A working diagram is constructed with the tail of force F_1 applied at the origin of a local 3-D coordinate system (X'-Y'-Z') whose axes are parallel to the original global coordinate system. A rectangular box is then sketched about F_1 so that F_1 becomes the box's diagonal. Next, the X,Y and Z components of F_1 are sketched such that like parts (tails) come together at F_1's point of application (the origin of the local coordinate system). Note that although the components are shown on the local (X'-Y'-Z') coordinate system, the components of F_1 are referenced to the global (X-Y-Z) coordinate system; F_{1X} is the X-component of F_1, F_{1Y} is the Y-component of F_1 and F_{1Z} is the Z-component of F_1. The x, y and z dimensions of the box are also shown on the working diagram, since these dimensions will be used in subsequent calculations.

<u>WORKING DIAGRAM FOR COMPONENTS OF F_1:</u>

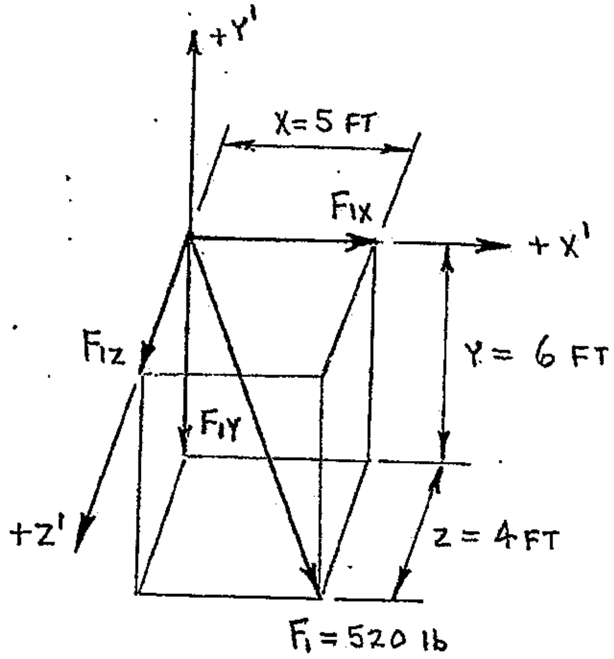

The length of the box's diagonal (d) can now be determined using the dimensions shown in the working diagram:

$$\text{length of box's diagonal} = \sqrt{(\text{x-dimension})^2 + (\text{y-dimension})^2 + (\text{z-dimension})^2}$$

$$d = \sqrt{x^2 + y^2 + z^2}$$

$$d = \sqrt{(5\text{ ft})^2 + (6\text{ ft})^2 + (4\text{ ft})^2}$$

$$d = \underline{\underline{8.77496\text{ ft}}}$$

cont'd.

Example 16-1: (cont'd.)

The X, Y and Z components of F_1 can now be determined. The component's magnitudes can be calculated using the equations shown in the procedure (pages 16-2 and 16-3). The direction and sense for each component were established in the working diagram, and are reported as part of each complete answer as shown below.

Determine F_1's X-component:

$$F_{1X} = \left(\frac{\text{x-dimension of box}}{\text{length of box's diagonal}}\right)(\text{magnitude of force } F_1)$$

$$F_{1X} = \left(\frac{x}{d}\right)(F_1)$$

$$F_{1X} = \left(\frac{5\text{ ft}}{8.77496\text{ ft}}\right)(520\text{ lb})$$

$$\underline{\underline{F_{1X} = 296.298\text{ lb}}}$$

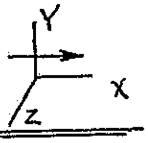

Determine F_1's Y-component:

$$F_{1Y} = \left(\frac{y}{d}\right)(F_1)$$

$$F_{1Y} = \left(\frac{6\text{ ft}}{8.77496\text{ ft}}\right)(520\text{ lb})$$

$$\underline{\underline{F_{1Y} = 355.557\text{ lb}}}$$

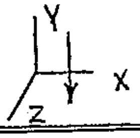

Determine F_1's Z-component:

$$F_{1Z} = \left(\frac{z}{d}\right)(F_1)$$

$$F_{1Z} = \left(\frac{4\text{ ft}}{8.77496\text{ ft}}\right)(520\text{ lb})$$

$$\underline{\underline{F_{1Z} = 237.038\text{ lb}}}$$

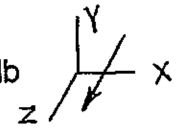

<u>Answer</u>:

$F_{1X} = 296.3\text{-lb}$

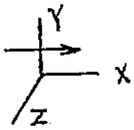

$F_{1Y} = 355.6\text{-lb}$

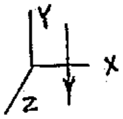

$F_{1Z} = 237.0\text{-lb}$

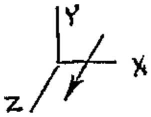

REDUCING 3-D COMPONENTS TO DEVELOP A RESULTANT FORCE

A recommended procedure for reducing 3-D components to a resultant force is outlined below. Note that the 3-D components could be the X, Y and Z components of a single force, or the sum of all components in the X-direction, the sum of all components in the Y-direction and the sum of all components in the Z-direction.

Procedure:

A) Sketch a graphical solution by constructing a COMPLETE working diagram.
   1) Construct a 3-D coordinate system (X-Y-Z axes).
   2) Sketch the X-Y and Z components onto the corresponding axis of the 3-D coordinate system such that the tails of each component come together at the origin of the coordinate system.
   3) Sketch a rectangular box using the components as the sides of the box.
   4) The resultant (F_R) will be the box's diagonal. Sketch the resultant such that its tail comes together with the tails of the components (like parts together at the point of application – the origin of the 3-D coordinate system).

B) Compute the magnitude of the resultant force (F_R) using the following equation:

$$F_R = \sqrt{(\Sigma F_X)^2 + (\Sigma F_Y)^2 + (\Sigma F_Z)^2} \qquad \text{and:} \quad F_X = \Sigma F_X, F_Y = \Sigma F_Y, F_Z = \Sigma F_Z$$

So: $$F_R = \sqrt{(F_X)^2 + (F_Y)^2 + (F_Z)^2}$$

C) Specify the resultant's direction and sense using COORDINATE DIRECTION ANGLES (θ_X, θ_Y, θ_Z). The coordinate direction angles are always measured from a POSITIVE axis of the 3-D coordinate system to the resultant's line of action. The correct sign (+ or -) must be used for each component when calculating the coordinate direction angles.
   1) θ_X specifies the angle between the resultant (F_R) and the POSITIVE X-axis, measured in the plane that contains both F_R and the X-axis. θ_X is calculated as follows:

$$\theta_X = \cos^{-1}\left(\frac{\text{X-component of resultant force}}{\text{resultant force}}\right)$$

$$\theta_X = \cos^{-1}\left(\frac{F_X}{F_R}\right)$$

Note:
The correct sign (+ or -) of the X-component must be used

   2) θ_Y specifies the angle between the resultant (F_R) and the POSITIVE Y-axis, measured in the plane that contains both F_R and the Y-axis. θ_Y is calculated as follows:

$$\theta_Y = \cos^{-1}\left(\frac{\text{Y-component of resultant force}}{\text{resultant force}}\right)$$

$$\theta_Y = \cos^{-1}\left(\frac{F_Y}{F_R}\right)$$

Note:
The correct sign (+ or -) of the Y-component must be used

3) θ_Z specifies the angle between the resultant (F_R) and the POSITIVE Z-axis, measured in the plane that contains both F_R and the Z-axis. θ_Z is calculated as follows:

$$\theta_Z = \cos^{-1}\left(\frac{\text{Z-component of resultant force}}{\text{resultant force}}\right)$$

$$\theta_Z = \cos^{-1}\left(\frac{F_Z}{F_R}\right)$$

Note:
The correct sign (+ or -) of the Z-component must be used.

D) Verify that the calculated direction angles are correct using the following equation:

$$(\cos\theta_X)^2 + (\cos\theta_Y)^2 + (\cos\theta_Z)^2 = 1$$

E) Report the answer for the resultant correctly and completely. Report the resultant's magnitude, and the values of each coordinate direction angle (θ_X, θ_Y, θ_Z). A sketch of the resultant and all coordinate direction angles is also helpful.

Example 16-2: Determine the resultant (F_R) of the components shown below. (These are the components of F_1 from Example 16-1, so the magnitude of F_R must be equal to the magnitude of F_1 from Example 16-1.)

F_X = 296.298-lb

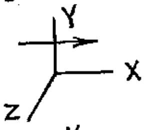

F_Y = 355.557-lb

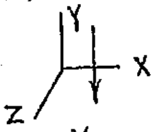

F_Z = 237.038-lb

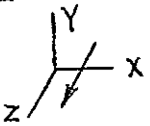

A working diagram is constructed using the components shown above. First, an X-Y-Z coordinate system is constructed. Next, the components are sketched onto the axes of the coordinate system such that the tails of each component come together at the coordinate system's origin. A rectangular box is constructed using the components as the box's sides. The resultant (F_R) is added to the diagram such that F_R is the box's diagonal, with the tail of F_R at the coordinate system's origin (like parts together at the point of application). The complete working diagram is shown on the following page.

cont'd.

Example 16-2: (cont'd.)

WORKING DIAGRAM OF COMPONENTS AND F_R:

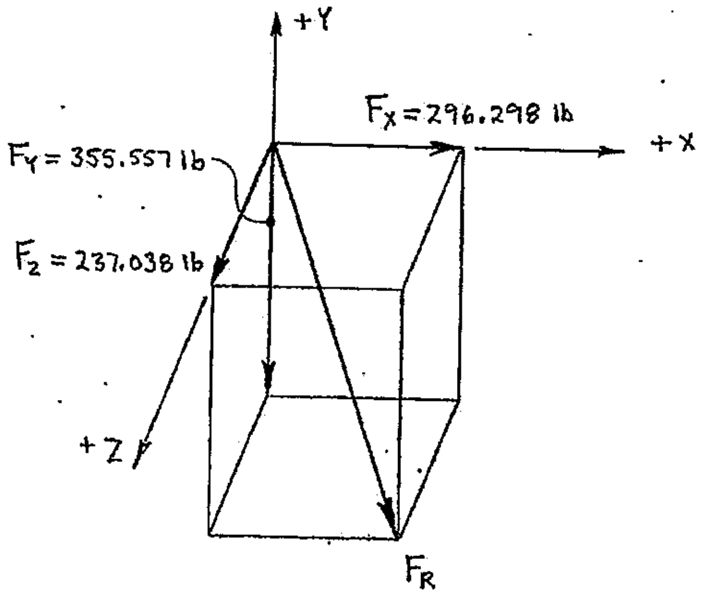

Calculate the magnitude of the resultant force (F_R):

$$F_R = \sqrt{(F_X)^2 + (F_Y)^2 + (F_Z)^2}$$

$$F_R = \sqrt{(296.298\text{ lb})^2 + (355.557\text{ lb})^2 + (237.038\text{ lb})^2}$$

$$F_R = \underline{\underline{520.000\text{ lb} \quad \text{(magnitude only)}}}$$

(Note: F_R = 520-lb = F_1 from Example 16-1, page 16-3)

Calculate the resultant's coordinate direction angles (θ_X, θ_Y, θ_Z):

$$\theta_X = \cos^{-1}\left(\frac{F_X}{F_R}\right)$$

$$\theta_X = \cos^{-1}\left(\frac{+296.298\text{ lb}}{520.0\text{ lb}}\right)$$

Note F_X's sign (+, positive)!

$$\theta_X = \underline{\underline{55.2634^0}}$$

cont'd.

Example 16-2: (cont'd.)

$$\theta_Y = \cos^{-1}\left(\frac{F_Y}{F_R}\right)$$

$$\theta_Y = \cos^{-1}\left(\frac{-355.557\text{ lb}}{520.0\text{ lb}}\right)$$ Note F_Y's sign (-, negative)!

$$\theta_Y = \underline{\underline{133.138^0}}$$

$$\theta_Z = \cos^{-1}\left(\frac{F_Z}{F_R}\right)$$

$$\theta_Z = \cos^{-1}\left(\frac{+237.038\text{ lb}}{520.0\text{ lb}}\right)$$ Note F_Z's sign (+, positive)!

$$\theta_Z = \underline{\underline{62.8809^0}}$$

Verify the calculated coordinate direction angles:

$$(\cos 55.2634^0)^2 + (\cos 133.138^0)^2 + (\cos 62.8809^0)^2 = 1$$

$\underline{\underline{0.999994 \cong 1}}$ (calculated coordinate direction angles are correct)

Answers:

$F_R = 520.0\text{-lb}$

$\theta_X = 55.26^0$

$\theta_Y = 133.1^0$

$\theta_Z = 62.88^0$

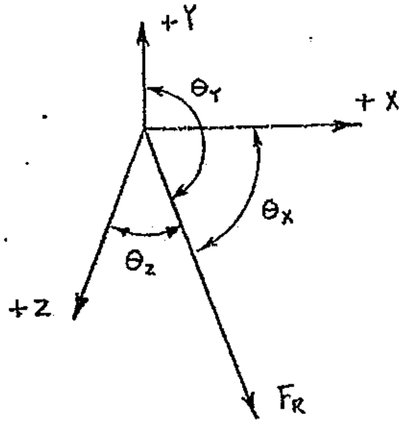

Developing 3-D Components of a Force Specified by Its Direction Angles

If a 3-D force is specified by its coordinate direction angles (θ_X, θ_Y, θ_Z), the equations used to calculate coordinate direction angles (see pages 16-6 and 16-7) can be rearranged and used to determine the force's components as shown below.

$$\theta_X = \cos^{-1}\left(\frac{F_X}{F_R}\right) \qquad \theta_Y = \cos^{-1}\left(\frac{F_Y}{F_R}\right) \qquad \theta_Z = \cos^{-1}\left(\frac{F_Z}{F_R}\right)$$

$$\left(\frac{F_X}{F_R}\right) = \cos\theta_X \qquad \left(\frac{F_Y}{F_R}\right) = \cos\theta_Y \qquad \left(\frac{F_Z}{F_R}\right) = \cos\theta_Z$$

$$F_X = (\cos\theta_X)(F_R) \qquad F_Y = (\cos\theta_Y)(F_R) \qquad F_Z = (\cos\theta_Z)(F_R)$$

Example 16-3: Determine the X, Y and Z components of force F_R shown below.

$F_R = 520.0\text{-lb}$

$\theta_X = 55.2624^0$

$\theta_Y = 133.138^0$

$\theta_Z = 62.8809^0$

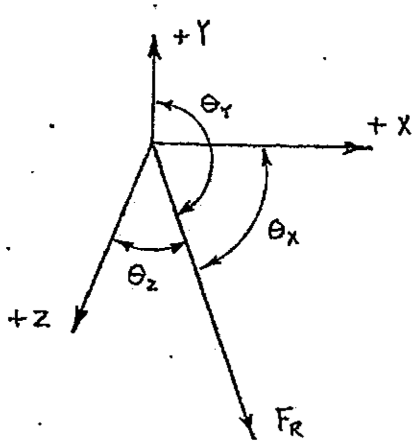

Calculate F_R's X-component:

$$\cos\theta_X = \left(\frac{F_X}{F_R}\right)$$

$$F_X = (\cos\theta_X)(F_R)$$

$$F_X = (\cos 55.2624^0)(520.0\text{ lb})$$

$$F_X = +296.306\text{ lb}$$

Note component's sign (+, positive)!

$F_X = 296.306$ lb

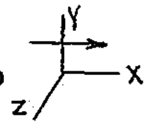

cont'd.

Example 16-3: (cont'd.)

Calculate F_R's Y-component:

$$\cos\theta_Y = \left(\frac{F_Y}{F_R}\right)$$

$$F_Y = (\cos\theta_Y)(F_R)$$

$$F_Y = (\cos 133.138^0)(520.0\text{ lb})$$

$$F_Y = -355.554\text{ lb}$$ Note component's sign (–, negative)!

$$\underline{\underline{F_Y = 355.554\text{ lb}}}$$

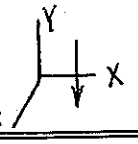

Calculate F_R's Z-component:

$$\cos\theta_Z = \left(\frac{F_Z}{F_R}\right)$$

$$F_Z = (\cos\theta_Z)(F_R)$$

$$F_Z = (\cos 62.8809^0)(520.0\text{ lb})$$

$$F_Z = +237.038\text{ lb}$$ Note component's sign (+, positive)!

$$\underline{\underline{F_Z = 237.038\text{ lb}}}$$

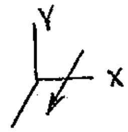

<u>Answer:</u>

F_X = 296.3-lb

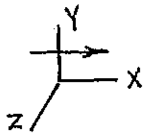

F_Y = 355.6-lb

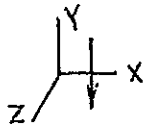

F_Z = 237.0-lb

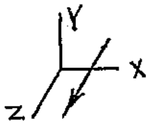

The procedures and techniques shown on pages 16-1 through 16-11 can also be used to determine the resultant of a system of forces, as shown in Example 16-4 (following page).

Example 16-4: Determine the resultant of the force system shown below, and specify the resultant using its coordinate direction angles. Force F_3 lies in the Y-Z plane.

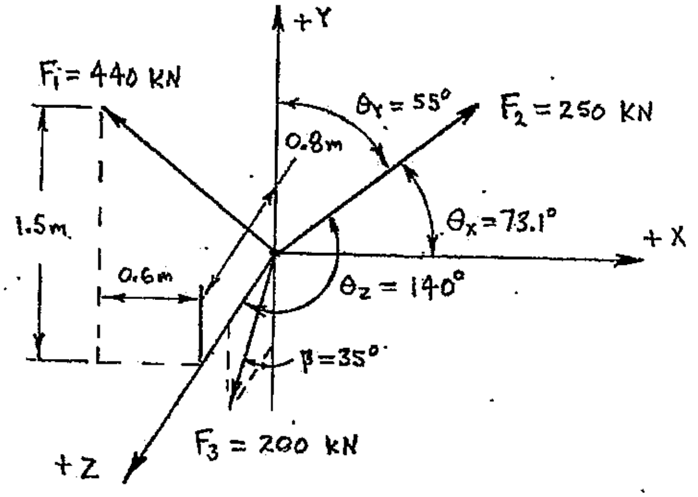

<u>WORKING DIAGRAM OF FORCE SYSTEM:</u>

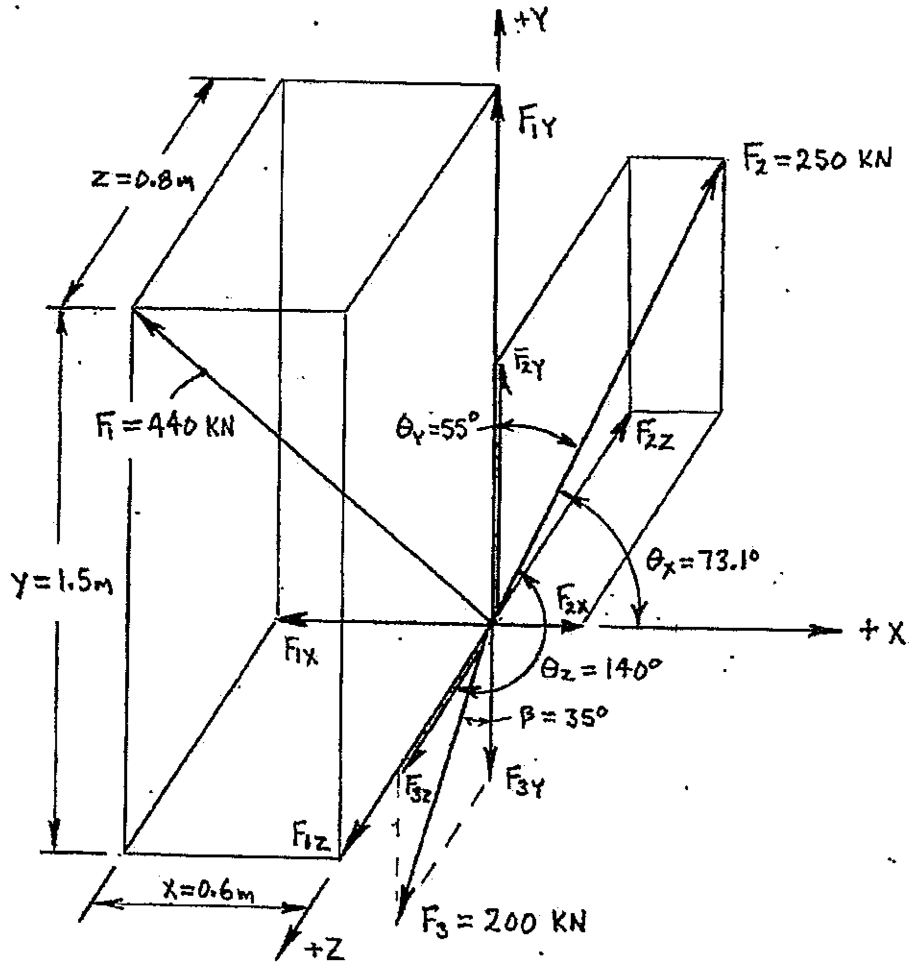

<u>cont'd.</u>

Example 16-4: (cont'd.)

Each individual force will be resolved into its X, Y and Z components. The X-component of the resultant will be found by summing all X-components. Likewise, the Y-component of the resultant will be found by summing all Y-components and the Z-component of the resultant will be found by summing all Z-components. The resultant's components will then be reduced to a single resultant force, and its coordinate direction angles will be calculated.

Determine the X, Y and Z components of force F_1:

Calculate the physical length (d) of the diagonal of the rectangular box constructed about F_1:

$$d = \sqrt{x^2 + y^2 + z^2}$$

$$d = \sqrt{(0.6\,\text{m})^2 + (1.5\,\text{m})^2 + (0.8\,\text{m})^2}$$

$$d = \underline{\underline{1.80278\,\text{m}}}$$

Calculate the X, Y and Z components of force F_1:

$$F_{1X} = \left(\frac{x}{d}\right)F_1$$

$$F_{1X} = \left(\frac{0.6\,\text{m}}{1.80278\,\text{m}}\right)(440\,\text{kN})$$

$$F_{1X} = \underline{\underline{146.440\,\text{kN}}}$$

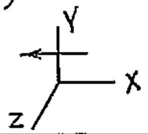

$$F_{1Y} = \left(\frac{y}{d}\right)F_1$$

$$F_{1Y} = \left(\frac{1.5\,\text{m}}{1.80278\,\text{m}}\right)(440\,\text{kN})$$

$$F_{1Y} = \underline{\underline{366.101\,\text{kN}}}$$

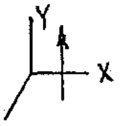

$$F_{1Z} = \left(\frac{z}{d}\right)F_1$$

$$F_{1Z} = \left(\frac{0.8\,\text{m}}{1.80278\,\text{m}}\right)(440\,\text{kN})$$

$$F_{1Z} = \underline{\underline{195.254\,\text{kN}}}$$

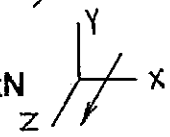

cont'd.

Example 16-4: (cont'd.)

Determine the X, Y and Z components of force F_2 using its coordinate direction angles:

$$\cos\theta_X = \left(\frac{F_{2X}}{F_2}\right)$$

$$F_{2X} = (\cos\theta_X)F_2$$

$$F_{2X} = (\cos 73.1^0)(250\,\text{kN})$$

$$F_{2X} = +72.6755\,\text{kN}$$

$$\underline{\underline{F_{2X} = 185.786\,\text{kN}}}$$

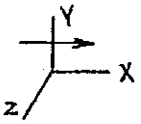

$$\cos\theta_Y = \left(\frac{F_{2Y}}{F_2}\right)$$

$$F_{2Y} = (\cos\theta_Y)F_2$$

$$F_{2Y} = (\cos 55^0)(250\,\text{kN})$$

$$F_{2Y} = +143.394\,\text{kN}$$

$$\underline{\underline{F_{2Y} = 143.394\,\text{kN}}}$$

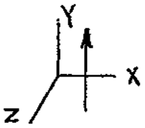

$$\cos\theta_Z = \left(\frac{F_{2Z}}{F_2}\right)$$

$$F_{2Z} = (\cos\theta_Z)F_2$$

$$F_{2Z} = (\cos 140^0)(250\,\text{kN})$$

$$F_{2Z} = -191.511\,\text{kN}$$

$$\underline{\underline{F_{2Z} = 191.511\,\text{kN}}}$$

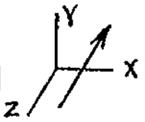

Determine the Y and Z components of force F_3. The x-component of force F_3 is equal to zero (0) since F_3 lies in the Y-Z plane.

$$\cos\beta = \left(\frac{F_{3Y}}{F_3}\right)$$

$$F_{3Y} = (\cos\beta)F_3$$

$$F_{3Y} = (\cos 35^0)(200\,\text{kN})$$

$$\underline{\underline{F_{3Y} = 163.830\,\text{kN}}}$$

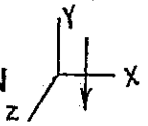

$$\sin\beta = \left(\frac{F_{3Z}}{F_3}\right)$$

$$F_{3Z} = (\sin\beta)F_3$$

$$F_{3Z} = (\sin 35^0)(200\,\text{kN})$$

$$\underline{\underline{F_{3Z} = 114.715\,\text{kN}}}$$

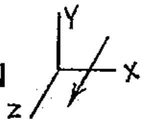

cont'd.

Example 16-4: (cont'd)

Determine the X, Y and Z components of the resultant force, F_R. The signs (+ or -) for each component in the summation equations are determined from the sign convention shown on the working diagram (page 16-12).

Calculate the X-component (F_{RX}) of the resultant force:

$$F_{RX} = \Sigma F_X$$
$$F_{RX} = \pm F_{1X} \pm F_{2X}$$
$$F_{RX} = - F_{1X} + F_{2X}$$
$$F_{RX} = -146.440\text{ kN} + 72.6755\text{ kN}$$
$$F_{RX} = -73.7645\text{ kN}$$

$$\underline{\underline{F_{RX} = 73.7645\text{ kN}}}$$

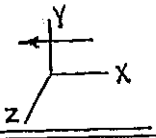

Calculate the Y-component (F_{RY}) of the resultant force:

$$F_{RY} = \Sigma F_Y$$
$$F_{RY} = \pm F_{1Y} \pm F_{2Y} \pm F_{3Y}$$
$$F_{RY} = + F_{1Y} + F_{2Y} - F_{3Y}$$
$$F_{RY} = +366.101\text{ kN} + 143.394\text{ kN} - 163.830$$
$$F_{RY} = +345.665\text{ kN}$$

$$\underline{\underline{F_{RY} = 345.665\text{ kN}}}$$

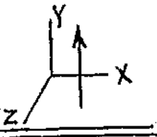

Calculate the Z-component (F_{RZ}) of the resultant force:

$$F_{RZ} = \Sigma F_Z$$
$$F_{RZ} = \pm F_{1Z} \pm F_{2Z} \pm F_{3Z}$$
$$F_{RZ} = + F_{1Z} - F_{2Z} + F_{3Z}$$
$$F_{RZ} = +195.254\text{ kN} - 191.511\text{ kN} + 114.715\text{ kN}$$
$$F_{RZ} = +118.458\text{ kN}$$

$$\underline{\underline{F_{RZ} = 118.458\text{ kN}}}$$

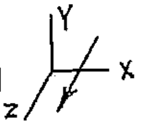

cont'd.

Example 16-4: (cont'd.)

Determine the magnitude of the resultant force, F_R:

$$F_R = \sqrt{(F_{RX})^2 + (F_{RY})^2 + (F_{RZ})^2}$$

$$F_R = \sqrt{(-73.7645\text{ kN})^2 + (+345.665\text{ kN})^2 + (+118.458\text{ kN})^2}$$

$$F_R = \underline{\underline{372.770\text{ kN}}} \qquad \text{(magnitude only)}$$

Determine the coordinate direction angles (θ_X, θ_Y, θ_Z) of the resultant force, F_R:

$$\theta_X = \cos^{-1}\left(\frac{F_{RX}}{F_R}\right) \qquad \theta_Y = \cos^{-1}\left(\frac{F_{RY}}{F_R}\right)$$

$$\theta_X = \cos^{-1}\left(\frac{-73.7645\text{ kN}}{372.770\text{ kN}}\right) \qquad \theta_Y = \cos^{-1}\left(\frac{+345.665\text{ kN}}{372.770\text{ kN}}\right)$$

$$\theta_X = \underline{\underline{101.413^0}} \qquad \theta_Y = \underline{\underline{21.9841^0}}$$

$$\theta_Z = \cos^{-1}\left(\frac{F_{RZ}}{F_R}\right)$$

$$\theta_Z = \cos^{-1}\left(\frac{+118.458\text{ kN}}{372.770\text{ kN}}\right)$$

$$\theta_Z = \underline{\underline{71.4714^0}}$$

Verify the calculated coordinate direction angles:

$$(\cos\theta_X)^2 + (\cos\theta_Y)^2 + (\cos\theta_Z)^2 = 1$$

$$(\cos 101.413^0)^2 + (\cos 21.9841^0)^2 + (\cos 71.4714^0)^2 = 1$$

$$\underline{\underline{1.00000 = 1}} \qquad \text{(calculated coordinate direction angles are correct)}$$

Answer:

$F_R = 372.8$ kN

$\theta_X = 101.4^0$

$\theta_Y = 21.98^0$

$\theta_Z = 71.47^0$

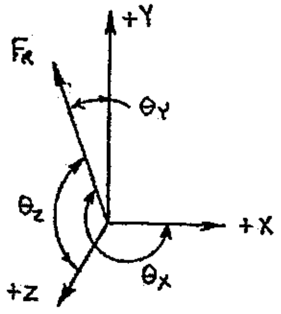

Section 2: 3-D Moments

Figure 16-3 (below) shows a graphical representation of a 3-D moment (M_P). A 3-D moment is typically shown as a directed line segment with a double arrowhead (the double arrowhead is used to distinguish a moment from a force). The length of the line segment represents the magnitude of the moment, and its direction (line of action) is designated by its coordinate direction angles θ_X, θ_Y and θ_Z. The sense of a 3-D moment (which way it tends to rotate about its line of action) is found using the RIGHT HAND RULE; if the thumb of your right hand is pointed in the same direction as the double arrowheads, then the curled fingers of your right hand will give the sense of the rotational tendency.

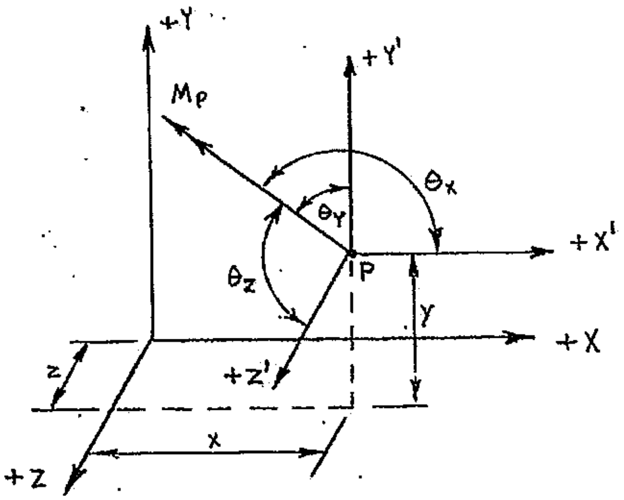

FIGURE 16-3 3-D moment with respect to (about) point P

It is important to note that the moment M_P (the moment about point P) shown in Figure 16-3 is actually the moment about an AXIS, defined by the direction angles θ_X, θ_Y and θ_Z, that passes through point P.

PROCEDURE TO CALCULATE A 3-D MOMENT

A procedure to calculate a 3-D moment is outlined below. This procedure is based on the construction of two-dimensional working diagrams that are developed by looking along each positive axis toward the origin of the 3-D coordinate system. These "2-D views" are used to calculate the moment's components (M_{PX}, M_{PY} and M_{PZ}); the components are then reduced to a single 3-D moment.

Procedure:

A) Develop the 3-D components of any/all forces shown in the system

B) Determine M_{PX} (the component of M_P about a local X-axis that passes through P).
   1) Construct a working diagram of the Z-Y view by looking down the global X-axis toward the origin of the coordinate system. The X-axis is shown as a point at

the intersection of the Y and Z axes. Positive (+) X is then out of the page, negative (-) is into the page. Show the Y and Z components of each force acting at their point of application. Include all dimensions necessary to develop moment arms for each component shown in this view.

2) Calculate M_{PX} by summing moments about point P. Signs for each term in the moment equation are determined using the right hand rule. If the curled fingers of the RIGHT hand follow the rotation about the X-axis caused by a force's component, then a RIGHT thumb pointing into the page (negative sense) indicates that the component is producing a negative (-) moment. Similarly, a right thumb pointing out of the page indicates a positive (+) moment. The sign (+ or -) of the numeric answer resulting from the summation of all the individual moments produced with respect to the X-axis is used, via the right hand rule, to generate the sense of rotation shown in the vector answer.

C) Determine M_{PY} (the component of M_P about a local Y-axis that passes through P).

1) Construct a working diagram of the Z-X view by looking down the global Y-axis toward the origin of the coordinate system. The Y-axis is shown as a point at the intersection of the X and Z axes. Positive (+) Y is then out of the page, negative (-) is into the page. Show the X and Z components of each force, acting at their point of application. Include all dimensions necessary to develop moment arms for each component shown in this view.

2) Calculate M_{PY} by summing moments about point P. Signs for each term in the moment equation are determined using the right hand rule. If the curled fingers of the RIGHT hand follow the rotation about the Y-axis caused by a force's component, then a RIGHT thumb pointing into the page (negative sense) indicates that the component is producing a negative (-) moment. Similarly, a right thumb pointing out of the page indicates a positive (+) moment. The sign (+ or -) of the numeric answer resulting from the summation of all the individual moments produced with respect to the Y-axis is used, via the right hand rule, to generate the sense of rotation shown in the vector answer.

D) Determine M_{PZ} (the component of M_P about a local Z-axis that passes through P).

1) Construct a working diagram of the Y-X view by looking down the global Z-axis toward the origin of the coordinate system. The Z-axis is shown as a point at the intersection of the X and Y axes. Positive (+) Z is then out of the page, negative (-) is into the page. Show the X and Y components of each force, acting at their point of application. Include all dimensions necessary to develop moment arms for each component shown in this view.

2) Calculate M_{PZ} by summing moments about point P. Signs for each term in the moment equation are determined using the right hand rule. If the curled fingers of the RIGHT hand follow the rotation about the Z-axis caused by a force's component, then a RIGHT thumb pointing into the page (negative sense) indicates that the component is producing a negative (-) moment. Similarly, a right thumb pointing out of the page indicates a positive (+) moment. The sign (+ or -) of the numeric answer resulting from the summation of all the individual moments produced with respect to the Z-axis is used, via the right hand rule, to generate the sense of rotation shown in the vector answer.

E) Compute the magnitude of the 3-D moment M_P using the following equation:

$$M_P = \sqrt{(\Sigma M_{PX})^2 + (\Sigma M_{PY})^2 + (\Sigma M_{PZ})^2} \qquad \underline{\text{and}}: M_{PX} = \Sigma M_{PX};\ M_{PY} = \Sigma M_{PY};\ M_{PZ} = \Sigma M_{PZ}$$

$$\text{So:}\quad M_P = \sqrt{(M_{PX})^2 + (M_{PY})^2 + (M_{PZ})^2}$$

F) Specify M_P's direction and sense using COORDINATE DIRECTION ANGLES (θ_X, θ_Y, θ_Z). The coordinate direction angles are always measured from a POSITIVE axis of the 3-D coordinate system to M_P's line of action. The correct sign (+ or -) must be used for each component (M_{PX}, M_{PY} and M_{PZ}) when calculating the coordinate direction angles.

$$\theta_X = \cos^{-1}\left(\frac{M_{PX}}{M_P}\right) \qquad \theta_Y = \cos^{-1}\left(\frac{M_{PY}}{M_P}\right) \qquad \theta_Z = \cos^{-1}\left(\frac{M_{PZ}}{M_P}\right)$$

E) Report the answer for M_P correctly and completely. Report M_P's magnitude and the values of its coordinate direction angles (θ_X, θ_Y, θ_Z). A sketch of the resultant and all coordinate direction angles is also helpful.

Example 16-5: Two forces are applied to a bracket as shown below. Determine the total moment with respect to point A.

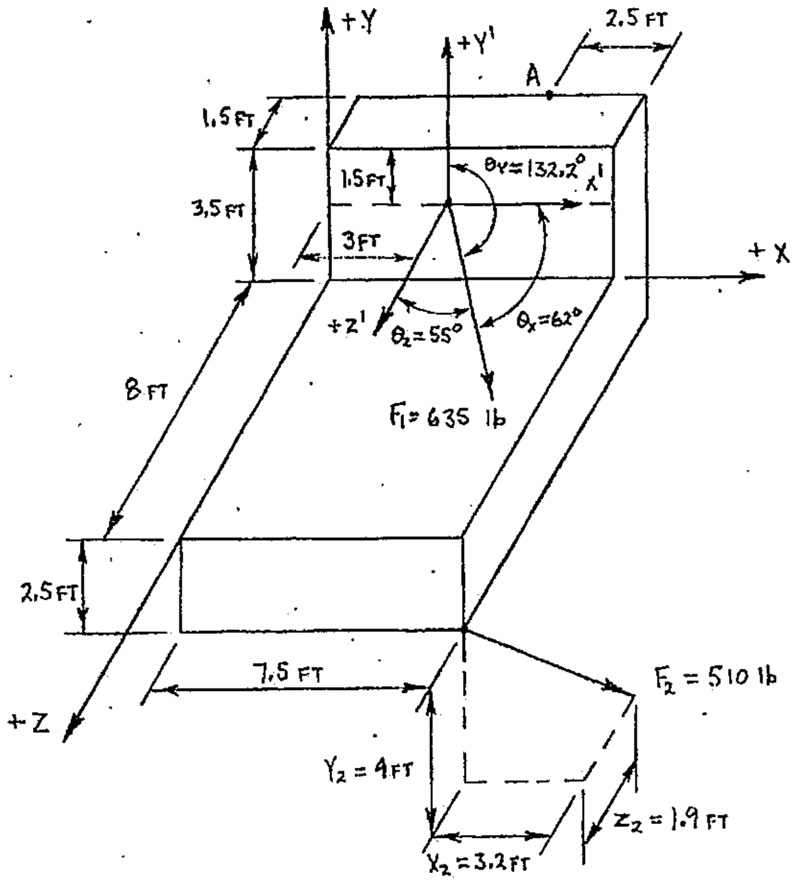

Example 16-5: (cont'd.)

First, the X, Y and Z components of forces F_1 and F_2 must be determined.

<u>WORKING DIAGRAM OF BRACKET:</u>

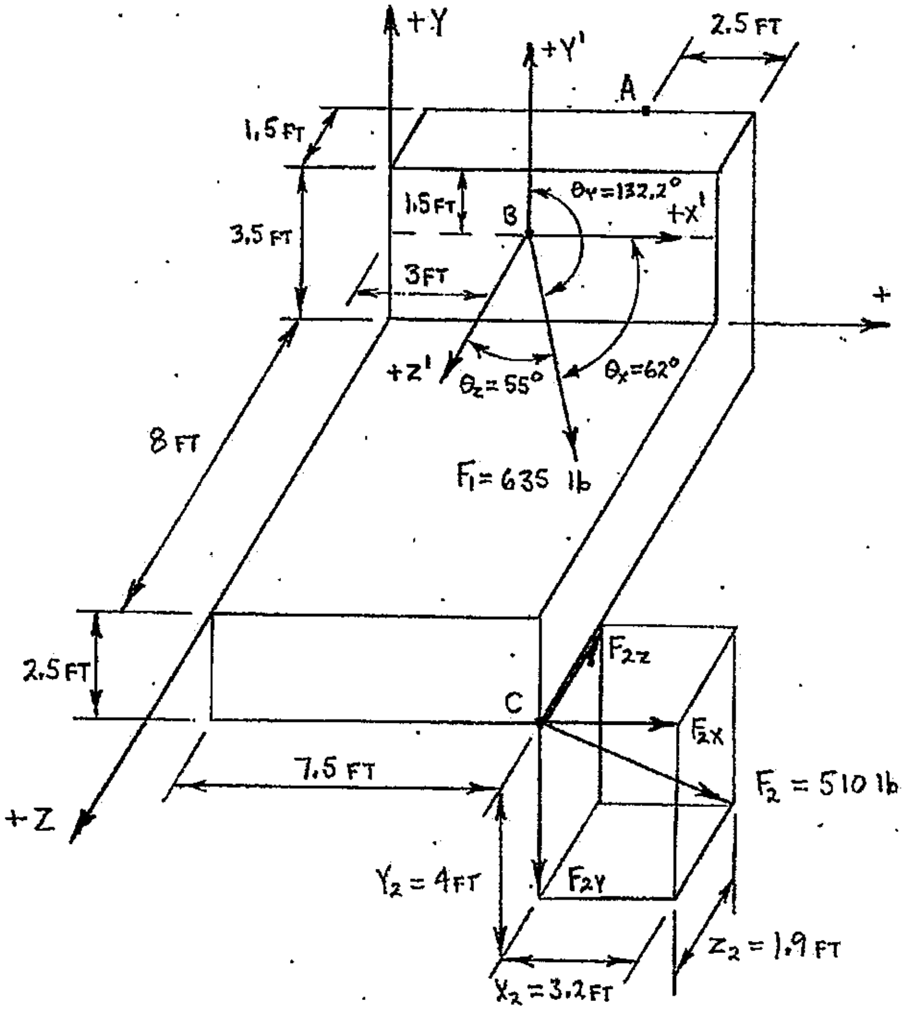

Determine the X, Y and Z components of force F_1 using its coordinate direction angles:

$$\cos\theta_X = \left(\frac{F_{1X}}{F_1}\right) \qquad \cos\theta_Y = \left(\frac{F_{1Y}}{F_1}\right) \qquad \cos\theta_Z = \left(\frac{F_{1Z}}{F_1}\right)$$

$$F_{1X} = (\cos\theta_X)(F_1) \qquad F_{1Y} = (\cos\theta_Y)(F_1) \qquad F_{1Z} = (\cos\theta_Z)(F_1)$$

$$F_{1X} = (\cos 62^0)(635\text{ lb}) \qquad F_{1Y} = (\cos 132.2^0)(635\text{ lb}) \qquad F_{1Z} = (\cos 55^0)(635\text{ lb})$$

$$F_{1X} = +\,298.114\text{ lb} \qquad F_{1Y} = -\,426.543\text{ lb} \qquad F_{1Z} = +\,364.221\text{ lb}$$

$F_{1X} = 298.114\text{ lb}$ 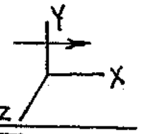

$F_{1Y} = 426.543\text{ lb}$ 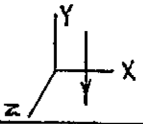

$F_{1Z} = 364.221\text{ lb}$ 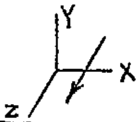

<u>cont'd.</u>

Example 16-5: (cont'd.)

Determine the X, Y and Z components of force F_2. A rectangular box was constructed around force F_2, such that F_2 became the box's diagonal (see the <u>WORKING DIAGRAM</u>, previous page). The physical length of the rectangular box's diagonal (d_2) can now be calculated:

$$d_2 = \sqrt{(x_2)^2 + (y_2)^2 + (z_2)^2}$$

$$d_2 = \sqrt{(3.2\text{ ft})^2 + (4\text{ ft})^2 + (1.9\text{ ft})^2}$$

$$d_2 = \underline{\underline{5.46352\text{ ft}}}$$

The components of force F_2 can now be found as follows:

$$F_{2X} = \left(\frac{x_2}{d_2}\right)F_2$$

$$F_{2X} = \left(\frac{3.2\text{ ft}}{5.46352\text{ ft}}\right)(510\text{ lb})$$

$$F_{2X} = \underline{\underline{298.709\text{ lb}}}$$

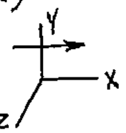

$$F_{2Y} = \left(\frac{y_2}{d_2}\right)F_2$$

$$F_{2Y} = \left(\frac{4\text{ ft}}{5.46352\text{ ft}}\right)(510\text{ lb})$$

$$F_{2Y} = \underline{\underline{373.386\text{ lb}}}$$

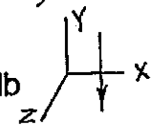

$$F_{2Z} = \left(\frac{z_2}{d_2}\right)F_2$$

$$F_{2Z} = \left(\frac{1.9\text{ ft}}{5.46352\text{ ft}}\right)(510\text{ lb})$$

$$F_{2Z} = \underline{\underline{177.358\text{ lb}}}$$

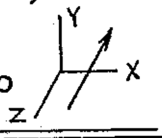

<u>cont'd</u>.

Example 16-5: (cont'd.)

Solve for M_{AX} (the component of M_A about a local X-axis that passes through A):

<u>WORKING DIAGRAM OF THE Y-Z VIEW</u>: (looking along the positive X-axis toward origin)

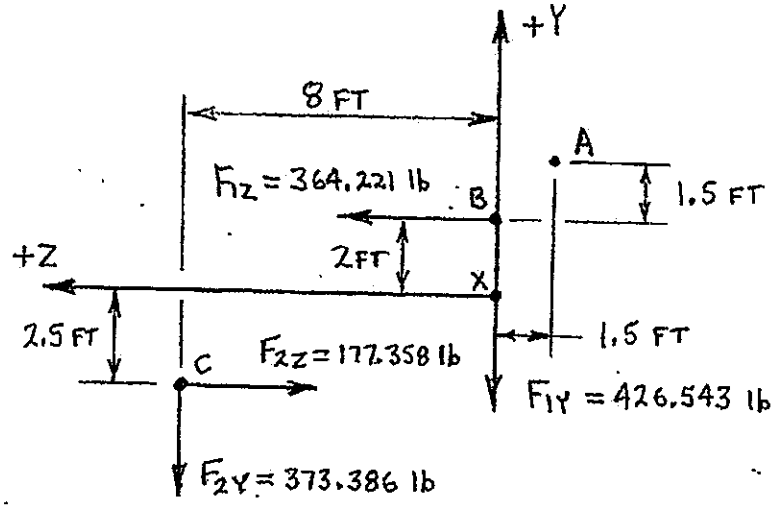

M_{AX} can now be determined by summing moments with respect to point A, using the working diagram shown above. The right hand rule <u>MUST</u> be used to develop the sign (+ or -) for each term in the moment equation. For example, F_{1Y} would tend to cause COUNTERCLOCKWISE rotation about point A. If the fingers on the right hand follow F_{1Y}'s counterclockwise rotation, then the right thumb will be pointing up which is considered positive (the positive X-axis comes out of the page); so, the moment F_{1Y} causes about point A is positive (+). Similarly, F_{1Z} would tend to cause CLOCKWISE rotation with respect to point A. If the fingers on the right hand follow F_{1Z}'s clockwise rotation, then the right thumb will be pointing down (negative); so, the moment F_{1Z} causes about point A is negative (-). Signs for the moments (about point A) caused by components F_{2Y} and F_{2Z} are found by the same method.

Summing moments with respect to point A to find M_{AX}:

$$M_{AX} = \Sigma M_{AX}$$

$$M_{AX} = \pm\left[(F_{1Y})(d_\perp)\right] \pm \left[(F_{1Z})(d_\perp)\right] \pm \left[(F_{2Y})(d_\perp)\right] \pm \left[(F_{2Z})(d_\perp)\right]$$

$$M_{AX} = +\left[(F_{1Y})(1.5\text{ ft})\right] - \left[(F_{1Z})(1.5\text{ ft})\right] + \left[(F_{2Y})(9.5\text{ ft})\right] + \left[(F_{2Z})(4.5\text{ ft})\right]$$

$$M_{AX} = +\left[(426.543\text{ lb})(1.5\text{ ft})\right] - \left[(364.221\text{ lb})(1.5\text{ ft})\right] + \left[(373.386\text{ lb})(9.5\text{ ft})\right] + \left[(177.358\text{ lb})(4.5\text{ ft})\right]$$

$$M_{AX} = +\,4438.76\text{ lb-ft}$$

Note component's sign (+, positive)!

$$\underline{\underline{M_{AX} = 4438.76\text{ lb-ft}}}$$

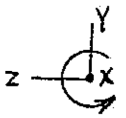

<u>cont'd.</u>

Example 16-5: (cont'd.)

Solve for M_{AY} (the component of M_A about a local Y-axis that passes through A):

WORKING DIAGRAM OF THE Z-X VIEW: (looking along the positive Y-axis toward origin)

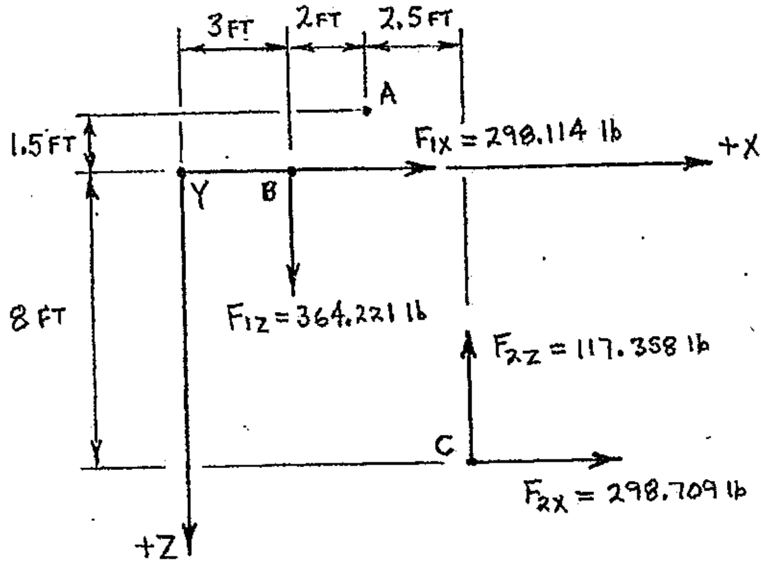

Summing moments with respect to point A to find M_{AY}:

$$M_{AY} = \Sigma M_{AY}$$

$$M_{AY} = \pm[(F_{1X})(d_\perp)] \pm [(F_{1Z})(d_\perp)] \pm [(F_{2X})(d_\perp)] \pm [(F_{2Z})(d_\perp)]$$

$$M_{AY} = +[(F_{1X})(1.5\text{ ft})] + [(F_{1Z})(2\text{ ft})] + [(F_{2X})(9.5\text{ ft})] + [(F_{2Z})(2.5\text{ ft})]$$

$$M_{AY} = +[(298.114\text{ lb})(1.5\text{ ft})] + [(364.221\text{ lb})(2\text{ ft})] + [(298.709\text{ lb})(9.5\text{ ft})] + [(177.358\text{ lb})(2.5\text{ ft})]$$

$$M_{AY} = +4306.74\text{ lb-ft}$$

Note component's sign (+, positive)!

$$M_{AY} = 4306.74\text{ lb-ft}$$

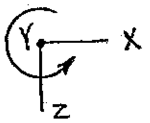

cont'd.

Example 16-5: (cont'd.)

Solve for M_{AZ} (the component of M_A about a local Z-axis that passes through A):

<u>WORKING DIAGRAM OF THE Y-X VIEW</u>: (looking along the positive Z-axis toward origin)

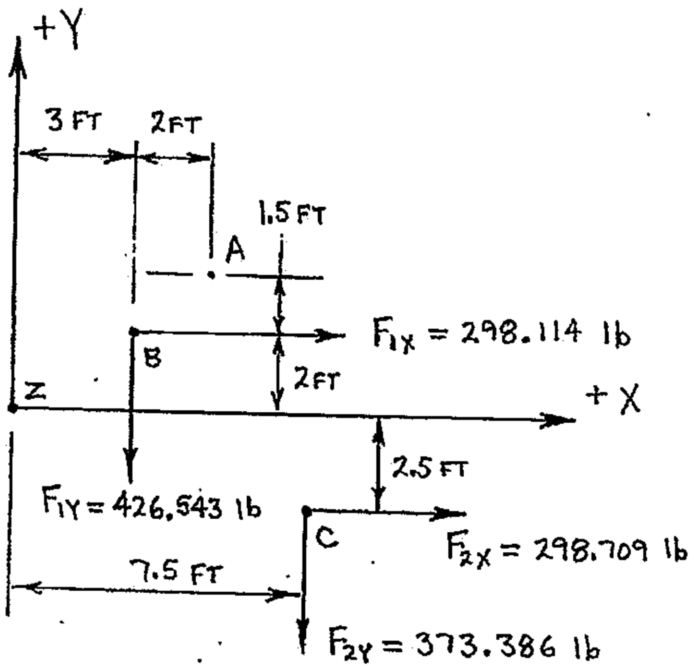

Summing moments with respect to point A to find M_{AZ}:

$$M_{AZ} = \Sigma M_{AZ}$$

$$M_{AZ} = \pm\left[(F_{1X})(d_\perp)\right] \pm \left[(F_{1Y})(d_\perp)\right] \pm \left[(F_{2X})(d_\perp)\right] \pm \left[(F_{2Y})(d_\perp)\right]$$

$$M_{AZ} = +\left[(F_{1X})(1.5\text{ ft})\right] + \left[(F_{1Y})(2\text{ ft})\right] + \left[(F_{2X})(6\text{ ft})\right] - \left[(F_{2Y})(2.5\text{ ft})\right]$$

$$M_{AZ} = +\left[(298.114\text{ lb})(1.5\text{ ft})\right] + \left[(426.543\text{ lb})(2\text{ ft})\right] + \left[(298.709\text{ lb})(6\text{ ft})\right] - \left[(373.386\text{ lb})(2.5\text{ ft})\right]$$

$$M_{AZ} = +2159.05\text{ lb-ft}$$

Note component's sign (+, positive)!

$$M_{AZ} = 2159.05\text{ lb-ft}$$

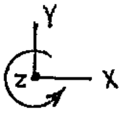

cont'd.

Example 16-5: (cont'd.)

The magnitude of the moment with respect to point A can now be determined:

$$M_A = \sqrt{(M_{AX})^2 + (M_{AY})^2 + (M_{AZ})^2}$$

$$M_A = \sqrt{(+4438.76 \text{ lb-ft})^2 + (+4306.744 \text{ lb-ft})^2 + (+2159.05 \text{ lb-ft})^2}$$

$$M_A = \underline{\underline{6550.73 \text{ lb-ft}}} \qquad \text{(magnitude only)}$$

Determine the coordinate direction angles for M_A:

$$\theta_X = \cos^{-1}\left(\frac{M_{AX}}{M_A}\right) \qquad \theta_Y = \cos^{-1}\left(\frac{M_{AY}}{M_A}\right)$$

$$\theta_X = \cos^{-1}\left(\frac{+4438.76 \text{ lb-ft}}{6550.73 \text{ lb-ft}}\right) \qquad \theta_Y = \cos^{-1}\left(\frac{+4306.74 \text{ lb-ft}}{6550.73 \text{ lb-ft}}\right)$$

$$\theta_X = \underline{\underline{47.3438^0}} \qquad \theta_Y = \underline{\underline{48.8948^0}}$$

$$\theta_Z = \cos^{-1}\left(\frac{M_{AZ}}{M_A}\right)$$

$$\theta_Z = \cos^{-1}\left(\frac{+2159.05 \text{ lb-ft}}{6550.73 \text{ lb-ft}}\right)$$

$$\theta_Z = \underline{\underline{70.7562^0}}$$

Verify the calculated coordinate direction angles:

$$(\cos\theta_X)^2 + (\cos\theta_Y)^2 + (\cos\theta_Z)^2 = 1$$

$$(\cos 47.3438^0)^2 + (\cos 48.8948^0)^2 + (\cos 70.7562^0)^2 = 1$$

$$\underline{\underline{0.999999 \cong 1}} \qquad \text{(calculated coordinate direction angles are correct)}$$

Answer:

M_A = 6551 lb-ft

$\theta_X = 47.34^0$

$\theta_Y = 48.89^0$

$\theta_Z = 70.76^0$

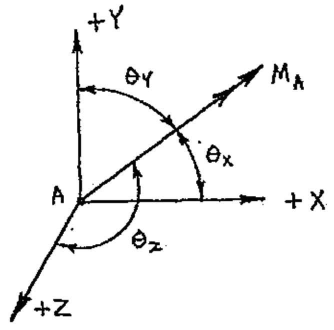

RESOLVING A 3-D MOMENT INTO ITS X, Y AND Z COMPONENTS

The X, Y and Z components of a 3-D moment represent its individual moments about each axis (its moment about the X-axis, moment about the Y-axis and moment about the Z-axis). A moment in 3-D space that is defined by its coordinate direction angles can be resolved into its X, Y and Z components as follows (this is the same method used to resolve a 3-D force into its X, Y and Z components):

$$\theta_X = \cos^{-1}\left(\frac{M_{PX}}{M_P}\right) \qquad \theta_X = \cos^{-1}\left(\frac{M_{PY}}{M_P}\right) \qquad \theta_Z = \cos^{-1}\left(\frac{M_{PZ}}{M_P}\right)$$

$$\cos\theta_X = \left(\frac{M_{PX}}{M_P}\right) \qquad \cos\theta_Y = \left(\frac{M_{PY}}{M_P}\right) \qquad \cos\theta_Z = \left(\frac{M_{PZ}}{M_P}\right)$$

$$M_{PX} = (\cos\theta_X)(M_P) \qquad M_{PY} = (\cos\theta_Y)(M_P) \qquad M_{PZ} = (\cos\theta_Z)(M_P)$$

Example 16-6: Determine the X, Y and Z components (M_{BX}, M_{BY} and M_{BZ}) of moment M_B shown below.

$M_B = 562$ kN-m

$\theta_X = 153^0$

$\theta_Y = 67.4^0$

$\theta_Z = 104^0$

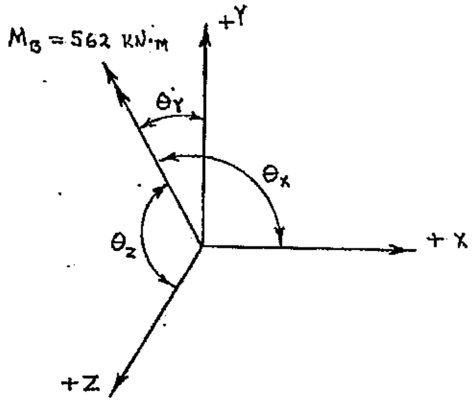

Solve for M_{BX} (the component of M_B about a local X-axis that passes through point B):

$$\cos\theta_X = \left(\frac{M_{BX}}{M_B}\right)$$

$$M_{BX} = (\cos\theta_X)(M_B)$$

$$M_{BX} = (\cos 153^0)(562\text{ kN-m})$$

$$M_{BX} = -500.746\text{ kN-m}$$

Note component's sign (–, negative)!

$M_{BX} = 500.746$ kN-m

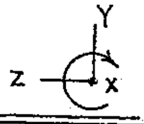

REMEMBER: The sign (+ or -) from the numeric answer is used, via the right hand rule, to generate the sense of rotation shown in the vector answer.

cont'd.

Example 16-6: (cont'd.)

Solve for M_{BY} (the component of M_B about a local Y-axis that passes through point B):

$$\cos\theta_Y = \left(\frac{M_{BY}}{M_B}\right)$$

$$M_{BY} = (\cos\theta_Y)(M_B)$$

$$M_{BY} = (\cos 67.4^0)(562\text{ kN-m})$$

$$M_{BY} = +215.974\text{ kN-m}$$ Note component's sign (+, positive)!

$$\underline{\underline{M_{BY} = 215.974\text{ kN-m}}}$$

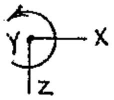

Solve for M_{BZ} (the component of M_B about a local Z-axis that passes through point B):

$$\cos\theta_Z = \left(\frac{M_{BZ}}{M_B}\right)$$

$$M_{BZ} = (\cos\theta_Z)(M_B)$$

$$M_{BZ} = (\cos 104^0)(562\text{ kN-m})$$

$$M_{BZ} = -135.960\text{ kN-m}$$ Note component's sign (–, negative)!

$$\underline{\underline{M_{BZ} = 135.960\text{ kN-m}}}$$

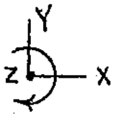

<u>Answer:</u>

M_{BX} = 500.8 kN-m

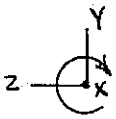

M_{BY} = 216.0 kN-m

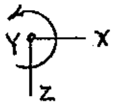

M_{BZ} = 136.0 kN-m

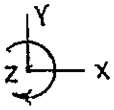

Section 3: Static Equilibrium of 3-D Systems

If an object (or system) in 3-D space is in static equilibrium, then the sum of all forces must equal zero and the sum of all moments must equal zero:

$$\Sigma F = 0 \qquad \text{and} \qquad \Sigma M = 0$$

The statement above leads to the following six independent equilibrium equations:

$$\Sigma F_X = 0 \qquad \Sigma M_X = 0$$
$$\Sigma F_Y = 0 \qquad \Sigma M_Y = 0$$
$$\Sigma F_Z = 0 \qquad \Sigma M_Z = 0$$

The six equilibrium equations shown above can be used to solve for up to six unknowns on a 3-D free body diagram. 3-D free body diagrams are constructed similar to 2-D free body diagrams, and must include all acting effects and all reactions. 3-D support reactions must be correctly modeled based on the type of connection at each point of support.

Types of 3-D Supports

Some supports (cables, smooth surfaces, roller supports) provide the same reaction when used in both 2-D and 3-D systems. Pin supports and fixed supports provide additional unknown reactions when used in 3-D systems (versus 2-D systems). The ball and socket support is commonly used only in 3-D systems, but provides support reactions similar to those provided by a 2-D pin support (force reactions only).

A "smooth surface" support in a 3-D system prevents translation (linear movement) only in a direction perpendicular to the smooth surface. So, a smooth surface can provide only a single reaction force with a known line of action (perpendicular to the smooth support surface). A smooth surface is modeled as a single reaction force with a known line of action that is perpendicular to the smooth surface (no matter what the orientation of the smooth surface), as shown in Figure 16-4.

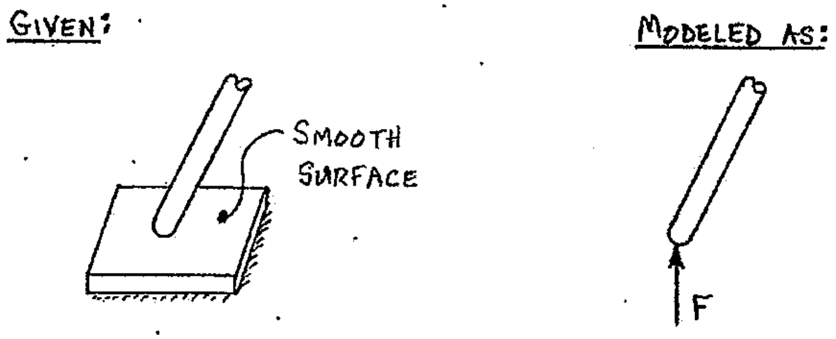

FIGURE 16-4 3-D smooth surface support

A 3-D roller support is similar to a 3-D smooth surface in that it can only provide support (a single reaction force) in a direction perpendicular to the surface being rolled across. A roller support is modeled as a single reaction force with a known line of action that is perpendicular to the surface being rolled across, as shown in Figure 16-5.

FIGURE 16-5 3-D roller support

A cable support can only be in tension, so a 3-D cable support provides a single reaction force with a known direction (the same as the cable's given orientation) with a known sense (always in tension). A 3-D cable support (or rope, chain, etc.) is modeled as a single reaction force with known line of action and known sense (pulling on the support location), as shown in Figure 16-6.

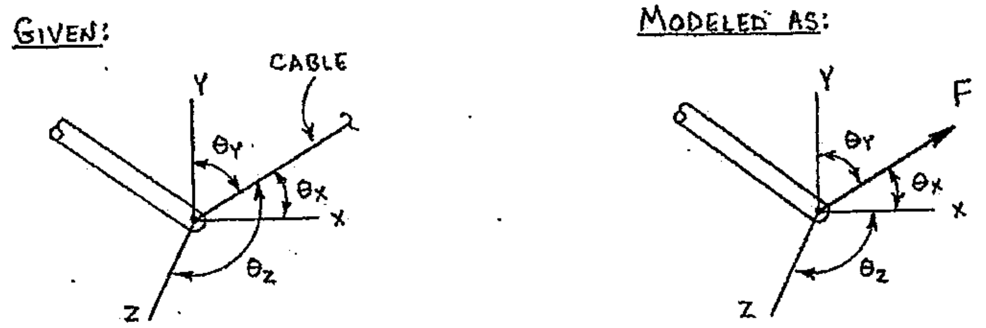

FIGURE 16-6 3-D cable support

A ball and socket support connection allows rotation in all directions but prevents linear movement in any direction. So, a ball and socket will provide a single reaction force with a ***specific, but unknown***, line of action. Thus, if a ball and socket support were modeled as a single reaction force, the magnitude, direction and sense of the reaction would all be unknown. Consequently, a ball and socket support is normally modeled as the 3-D components (F_X, F_Y and F_Z) of the single reaction force. Then, if the single reaction force at the ball and socket is required, it can be found by calculating the resultant of its reaction components (F_X, F_Y and F_Z). Ball and socket supports are modeled as shown in Figure 16-7 (following page). Unless instructed otherwise, ALWAYS model a ball and socket support as three components (F_X, F_Y and F_Z) regardless of the angle of attachment for the pin support.

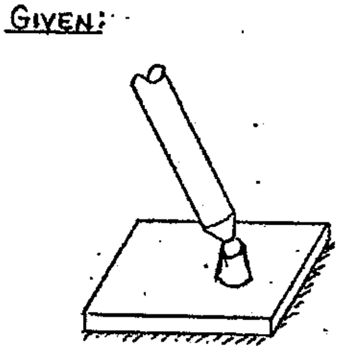

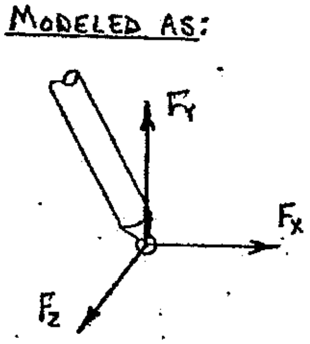

FIGURE 16-7 Ball and socket support

A single 3-D pin support is shown below in Figure 16-8. The 3-D pin support will prevent linear movement in any direction, which results in three force reaction components (F_X, F_Y and F_Z). If the pin shown in Figure 16-8 is collinear to the Z-axis, then the pin support will allow rotation about the Z-axis but prevent rotation about the X and Y axes. The 3-D pin support would then have two components (C_X and C_Y) of a reaction couple. Thus, a 3-D pin support is typically modeled with 5 unknowns; F_X, F_Y, F_Z, C_X and C_Y (see Figure 16-8).

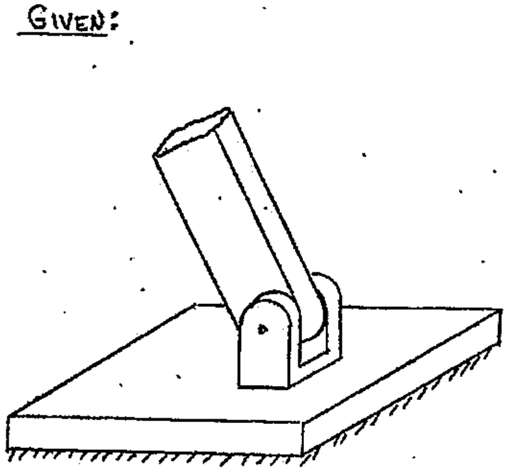

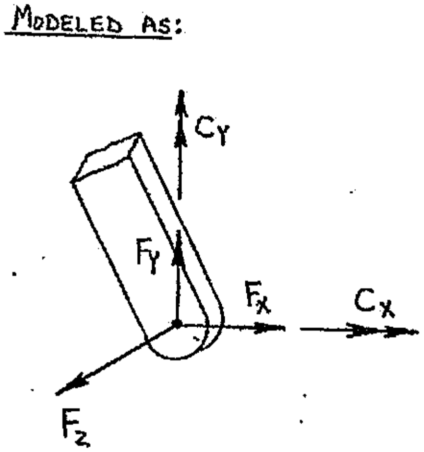

FIGURE 16-8 A single 3-D pin support

A single 3-D smooth bearing support (also called a plain bearing) is shown in Figure 16-9 (following page). The 3-D bearing support will allow linear movement parallel to the shaft and rotation about the shaft, but prevents linear movement along and rotation about axes that are perpendicular to the shaft. A single 3-D smooth bearing support is normally modeled using two force component reactions (perpendicular to the shaft) and two couple component reactions (about axes that are perpendicular to the shaft). If the shaft in Figure 16-9 is assumed to be collinear with the Z-axis, then the single 3-D smooth bearing support is modeled using two force component reactions (F_X and F_Y) and two couple component reactions (C_X and C_Y), as shown in Figure 16-9 (following page).

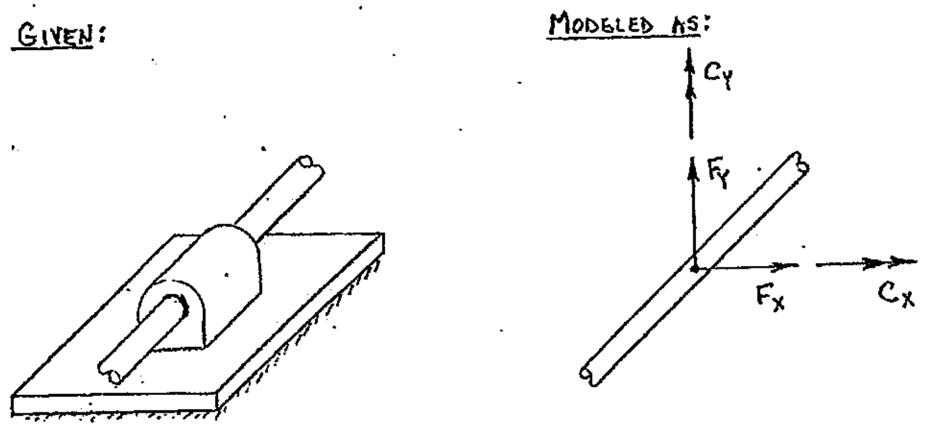

FIGURE 16-9 A single 3-D smooth bearing support

A single 3-D hinge support is shown below in Figure 16-10. Since a single 3-D hinge allows only one type of motion (rotation about the hinge pin) a single hinge is normally modeled using three mutually perpendicular force component reactions (F_X, F_Y and F_Z) and two couple component reactions about axes that are perpendicular to the hinge pin. If the hinge pin in Figure 16-10 is collinear with the X-axis, then the hinge would typically be modeled on a FBD using five unknown reaction components; F_X, F_Y, F_Z, C_Y and C_Z.

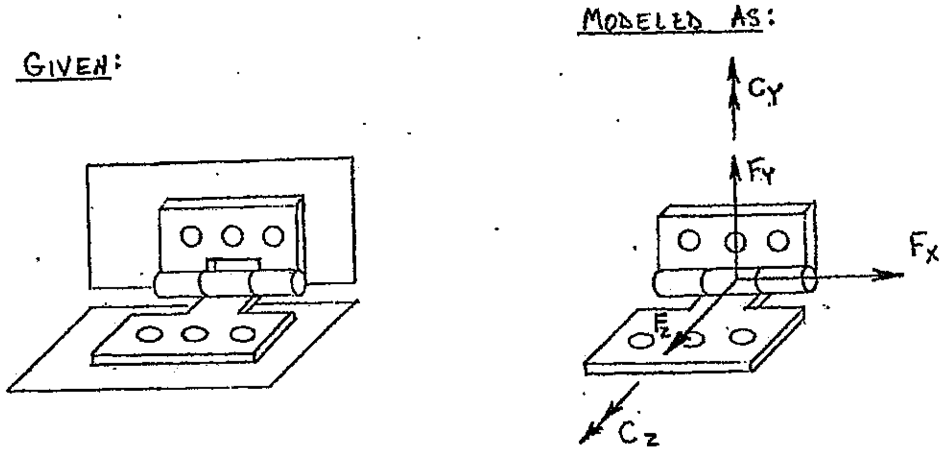

FIGURE 16-10 A single 3-D hinge support

A 3-D fixed support is shown in Figure 16-11 (following page). A fixed support does not allow ANY movement (rotation, or linear translation) in ANY direction. Consequently, a 3-D fixed support is normally modeled using six unknown reaction components; F_X, F_Y, F_Z, C_X, C_Y and C_Z.

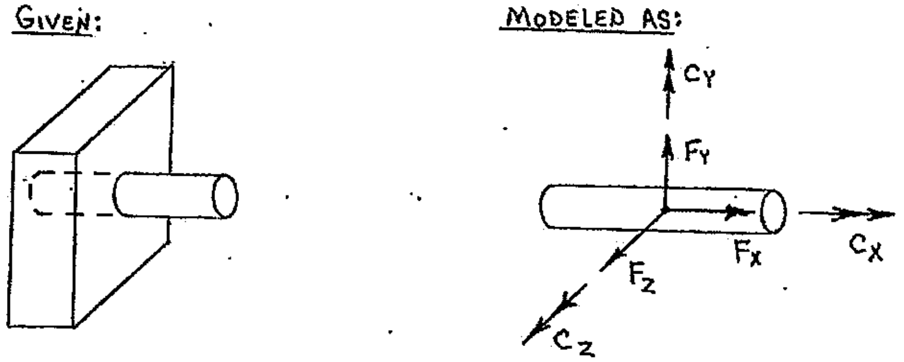

FIGURE 16-11 3-D fixed support

PROPERLY ALIGNED SMOOTH BEARINGS, PINS AND/OR HINGES

It is common to use two (or more) smooth bearings to support a single shaft. Likewise, hinges (or pins) are often used in groups of two or more; residential entry doors typically have two, three or four hinges depending on the weight of the door. The term "properly aligned" smooth bearings (or hinges/pins) refers to bearings that are aligned exactly collinear with a shaft centerline. If two smooth bearing supports (or hinges/pins) are properly aligned, then the force reactions at one bearing will prevent any possible rotation about the other bearing (and vice versa). Since there can be no couple component reactions on properly aligned smooth bearings, any **properly aligned smooth bearings (or hinges/pins) are modeled using ONLY force components** on free body diagrams (see Figure 16-12).

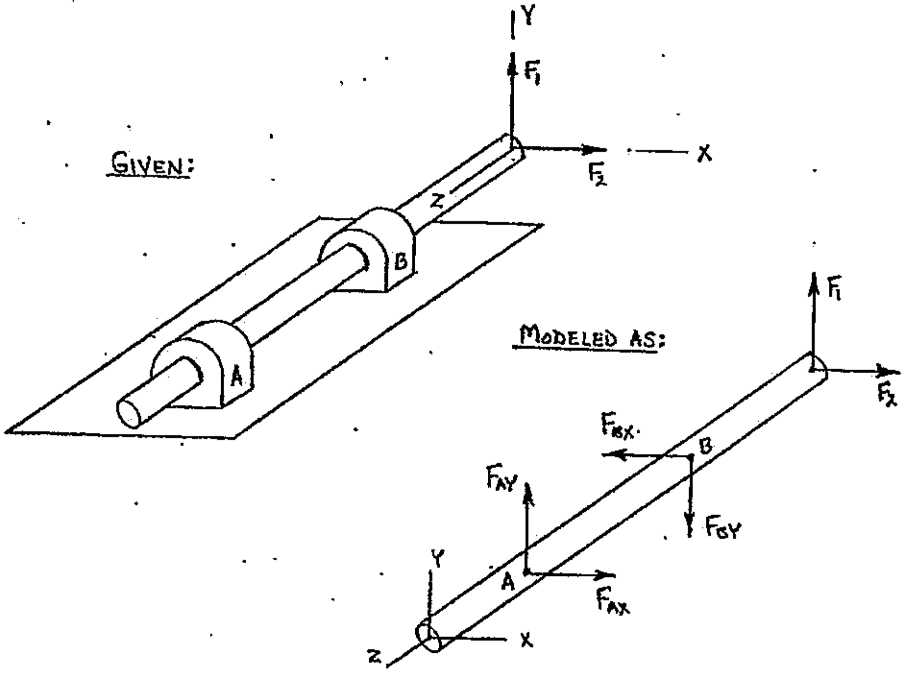

FIGURE 16-12 Two properly aligned smooth bearing supports

SOLUTION PROCEDURE FOR 3-D STATIC EQUILIBRIUM

A general solution procedure for 3-D static equilibrium is shown below. Each problem is unique, and sometimes there may be several different ways to solve for the required unknowns. However, the general procedure outlined below should help to define a consistent solution methodology. This procedure is based on working from a series of 2-D views, AFTER the support reactions have been correctly modeled on a 3-D free body diagram of the object or system.

General solution procedure for 3-D static equilibrium:

1. Construct a complete 3-D FBD of the object or system, and correctly model all support reactions on the FBD. It may be helpful to return to this diagram and add useful information (force components, etc.) as values are developed during the problem solution.
2. Determine the X, Y and Z components of all forces and couples that exist in the FBD from step 1 above.
3. Construct a complete 2-D FBD of the Y-Z view (by looking along the positive X-axis toward the origin).
    a. Develop and solve equilibrium equations for as many unknowns as possible.
4. Construct a complete 2-D FBD of the Z-X view (by looking along the positive Y-axis toward the origin). Include any known information (support reaction components, etc.) that was developed from the previous 2-D FBD.
    a. Develop and solve equilibrium equations for as many unknowns as possible.
5. Construct a complete 2-D FBD of the Y-X view (by looking along the positive Z-axis toward the origin). Include any known information (support reaction components, etc.) that was developed from the previous 2-D free body diagrams.
    a. Develop and solve equilibrium equations for any remaining unknowns.
6. Report all answers completely and correctly.

Example 16-7 A horizontal rigid bar of negligible weight is attached to a wall using a fixed support at point A. Force F_1 lies in the X-Y plane, and force F_2 lies in a plane parallel to the Y-Z plane. All force are applied along the centerline of the bar. Determine all support reaction components acting on the bar at point A.

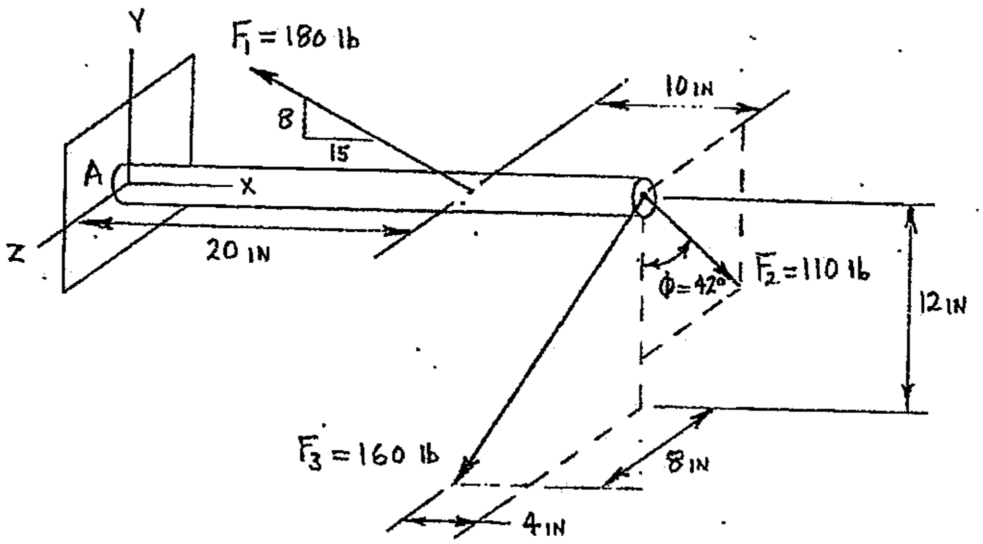

A 3-D free body diagram of the bar is constructed that includes all support reaction components at point A, and components of the three acting forces (F_1, F_2 and F_3). The 3-D FBD will be used to develop components of the acting forces, and will also be used as a guide when constructing free body diagrams of the 2-D views.

<u>3-D FBD OF HORIZONTAL BAR:</u>

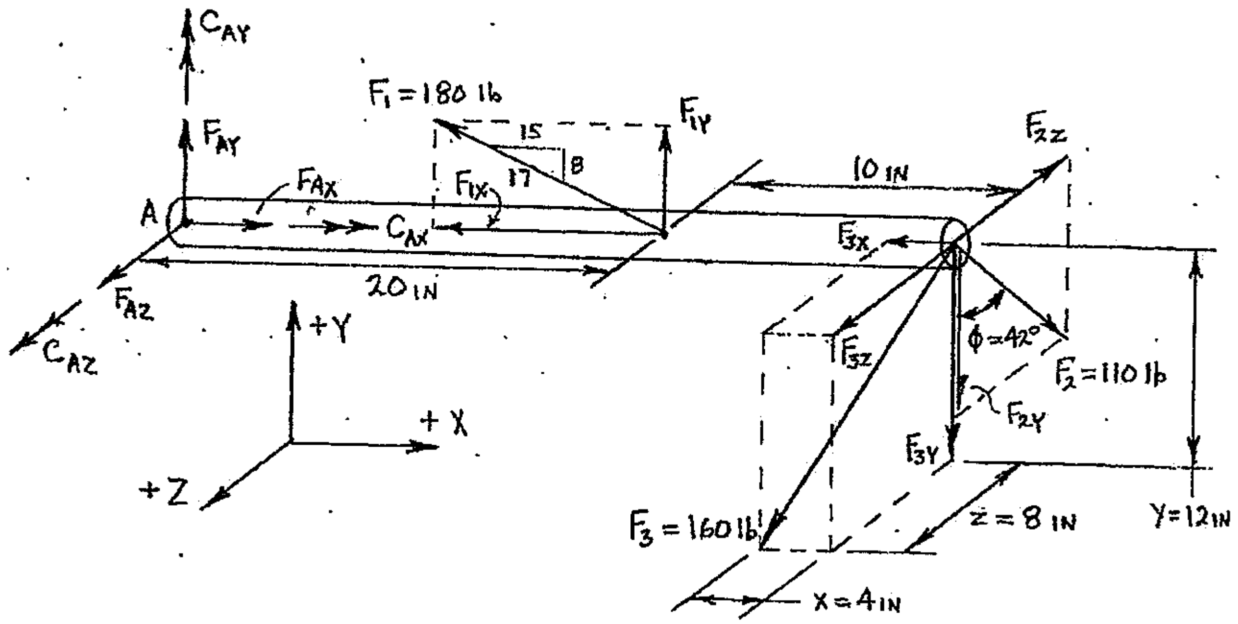

cont'd.

Example 16-7: (cont'd.)

The X and Y components of force F_1 can be determined using the slope triangle:

$$F_{1X} = \left(\frac{15}{17}\right)F_1$$

$$F_{1X} = \left(\frac{15}{17}\right)(180\text{ lb})$$

$$F_{1X} = 158.824\text{ lb}$$

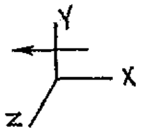

$$F_{1Y} = \left(\frac{8}{17}\right)F_1$$

$$F_{1Y} = \left(\frac{8}{17}\right)(180\text{ lb})$$

$$F_{1Y} = 84.7059\text{ lb}$$

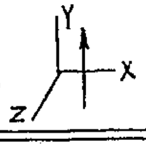

The Y and Z components of force F_2 can be determined using angle ϕ:

$$F_{2Y} = F_2(\cos\phi)$$

$$F_{2Y} = (110\text{ lb})(\cos 42^0)$$

$$F_{2Y} = 81.7459\text{ lb}$$

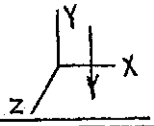

$$F_{2Z} = F_2(\sin\phi)$$

$$F_{2Z} = (110\text{ lb})(\sin 42^0)$$

$$F_{2Z} = 73.6044\text{ lb}$$

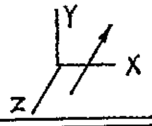

A rectangular box was constructed on the 3-D FBD (previous page) such that force F_3 became the box's diagonal. The X, Y and Z components of force F_3 can now be determined using the dimensions of the rectangular box and the magnitude of force F_3. The box's diagonal is calculated as follows:

$$\text{length of box's diagonal} = \sqrt{(\text{x-dimension})^2 + (\text{y-dimension})^2 + (\text{z-dimension})^2}$$

$$d = \sqrt{x^2 + y^2 + z^2}$$

$$d = \sqrt{(4\text{ in})^2 + (12\text{ in})^2 + (8\text{ in})^2}$$

$$d = 14.9666\text{ in}$$

The X, Y and Z components of force F_3 are:

$$F_{3X} = \left(\frac{x}{d}\right)(F_1)$$

$$F_{3X} = \left(\frac{4\text{ in}}{14.9666\text{ in}}\right)(160\text{ lb})$$

$$F_{3X} = 42.7619\text{ lb}$$

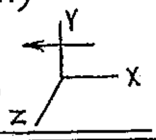

$$F_{3Y} = \left(\frac{y}{d}\right)(F_1)$$

$$F_{3Y} = \left(\frac{12\text{ in}}{14.9666\text{ in}}\right)(160\text{ lb})$$

$$F_{3Y} = 128.286\text{ lb}$$

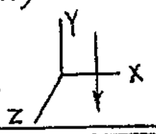

cont'd.

Example 16-7: (cont'd.)

$$F_{3z} = \left(\frac{z}{d}\right)(F_1)$$

$$F_{3z} = \left(\frac{8\text{ in}}{14.9666\text{ in}}\right)(160\text{ lb})$$

$$F_{3z} = 85.5238\text{ lb}$$

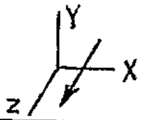

A series of 2-D free body diagrams will now be used to develop equilibrium equations that can be used to solve for the unknown reaction components at point A.

<u>FBD OF THE Y-Z VIEW</u>: (looking along the positive X-axis toward the origin)

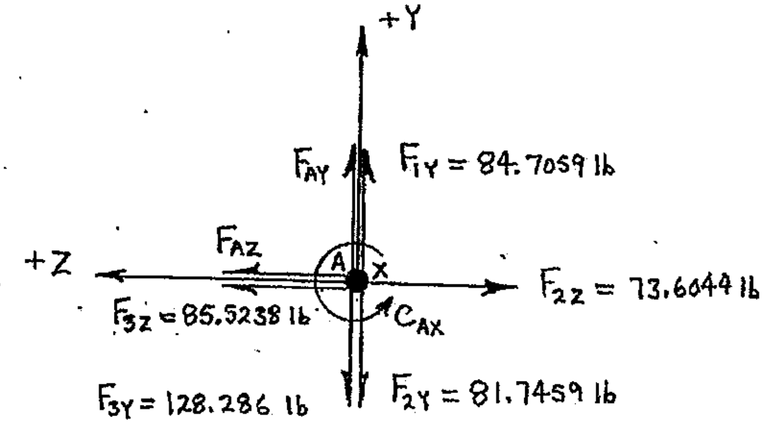

Determine support reaction F_{AY}:

$$\Sigma F_Y = 0$$

$$0 = \pm F_{AY} \pm F_{1Y} \pm F_{2Y} \pm F_{3Y}$$

$$0 = +F_{AY} + F_{1Y} - F_{2Y} - F_{3Y}$$

$$F_{AY} = -F_{1Y} + F_{2Y} + F_{3Y}$$

$$F_{AY} = -84.7059\text{ lb} + 128.286\text{ lb} + 81.7459\text{ lb}$$

$$F_{AY} = +125.326\text{ lb}$$

$$F_{AY} = 125.326\text{ lb}$$

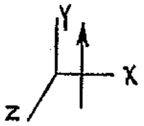

<u>cont'd.</u>

Example 16-7: (cont'd.)

Determine support reaction F_{AZ}:

$$\Sigma F_Z = 0$$
$$0 = \pm F_{AZ} \pm F_{2Z} \pm F_{3Z}$$
$$0 = +F_{AZ} - F_{2Z} + F_{3Z}$$
$$F_{AZ} = +F_{2Y} - F_{3Z}$$
$$F_{AZ} = +73.6044\text{ lb} - 85.5238\text{ lb}$$
$$F_{AZ} = -11.9194\text{ lb}$$

$$\underline{\underline{F_{AZ} = 11.9194\text{ lb}}}$$

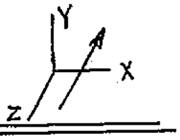

Determine support reaction C_{AX}:

$$\Sigma M_A = 0$$
$$0 = \pm C_{AX}$$
$$C_{AX} = \underline{\underline{0}}$$

Three of the six unknown reaction components (F_{AY}, F_{AZ} and C_{AX}) for the fixed support at A were found using the FBD of the X-Y view. The remaining unknown reactions can be determined using 2-D free body diagrams of the Z-X and Y-X views.

<u>FBD OF THE Z-X VIEW</u>: (looking along the positive Y-axis toward the origin)

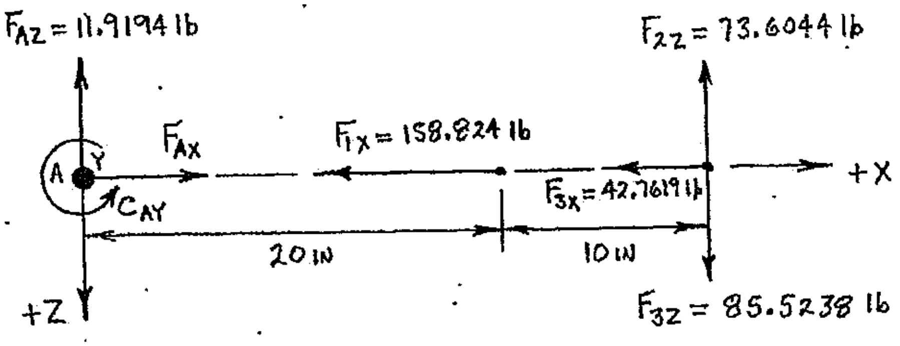

Determine support reaction F_{AX}:

$$\Sigma F_X = 0$$
$$0 = \pm F_{AX} \pm F_{1X} \pm F_{3X}$$
$$0 = +F_{AX} - F_{1X} - F_{3X}$$
$$F_{AX} = +F_{1X} + F_{3X}$$
$$F_{AX} = +158.824\text{ lb} + 42.7619\text{ lb}$$
$$F_{AX} = +201.586\text{ lb}$$

$$\underline{\underline{F_{AX} = 201.586\text{ lb}}}$$

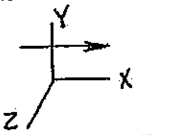

<u>cont'd.</u>

Example 16-7: (cont'd.)

Determine support reaction C_{AY}:

$$\Sigma M_A = 0$$
$$0 = \pm C_{AY} \pm [(F_{2z})(d\perp)] \pm [(F_{3z})(d_\perp)]$$
$$0 = +C_{AY} + [(F_{2z})(30\text{ in})] - [(F_{3z})(30\text{ in})]$$
$$C_{AY} = -[(F_{2z})(30\text{ in})] + [(F_{3z})(30\text{ in})]$$
$$C_{AY} = -[(73.6044\text{ lb})(30\text{ in})] + [(85.5238\text{ lb})(30\text{ in})]$$
$$C_{AY} = +357.582\text{ lb-in}$$
$$C_{AY} = 357.582\text{ lb-in}$$

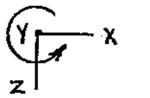

The remaining unknown support reaction at A (C_{AZ}) can now be found using the 2-D FBD of the Y-X view. Even though values for F_{AY}, F_{AX}, F_{1X} and F_{3X} are now known, these values have not been included on the 2-D FBD of the Y-X view since they are not required to calculate C_{AZ}.

FBD OF THE Y-X VIEW: (looking along the positive Z-axis toward the origin)

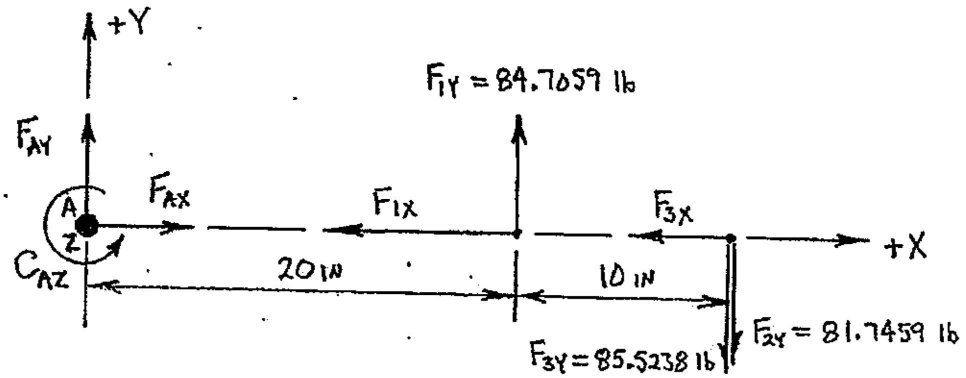

Determine support reaction C_{AZ}:

$$\Sigma M_A = 0$$
$$0 = \pm C_{AZ} \pm [(F_{1Y})(d_\perp)] \pm [(F_{2Y})(d_\perp)] \pm [(F_{3Y})(d_\perp)]$$
$$0 = +C_{AZ} + [(F_{1Y})(20\text{ in})] - [(F_{2Y})(30\text{ in})] - [(F_{3Y})(30\text{ in})]$$
$$C_{AZ} = -[(F_{1Y})(20\text{ in})] + [(F_{2Y})(30\text{ in})] + [(F_{3Y})(30\text{ in})]$$

cont'd.

Example 16-7: (cont'd.)

$$C_{AZ} = -\left[(F_{1Y})(20\text{ in})\right] + \left[(F_{2Y})(30\text{ in})\right] + \left[(F_{3Y})(30\text{ in})\right]$$

$$C_{AZ} = -\left[(84.7059\text{ lb})(20\text{ in})\right] + \left[(81.7459\text{ lb})(30\text{ in})\right] + \left[(85.5238\text{ lb})(30\text{ in})\right]$$

$$C_{AZ} = +3323.97\text{ lb-in}$$

$$C_{AZ} = 3323.97\text{ lb-in}$$

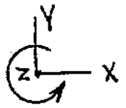

Answer:

$F_{AX} = 201.6$ lb

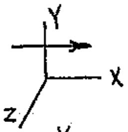

$F_{AY} = 125.3$ lb

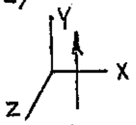

$F_{AZ} = 11.92$ lb

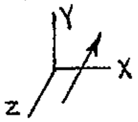

$C_{AX} = 0$

$C_{AY} = 357.6$ lb-in

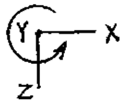

$C_{AZ} = 3324$ lb-in

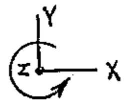

SUMMARY

Summing forces in 3-D space normally requires that each individual force be resolved into its X, Y and Z components. The sums of the like components can then be reduced to a single resultant force, and coordinate direction angles determined to describe the resultant force's line of action. Two methods were presented for resolving a 3-D force into its components, and the particular method used depends on how the force was originally described and/or shown.

Summation of moments in 3-D space can be accomplished using a series of 2-D views which are developed by looking down a positive axis toward the origin of a 3-D coordinate system. Each 2-D view contains all force and couple components that appear on that view, which are then used to develop one component (X, Y or Z) of the total moment (with respect to a specific reference). The components can then be reduced to the single resultant moment and the coordinate direction angles can be determined.

When an object in 3-D space is in static equilibrium, the sum of all forces must equal zero and the sum of all moments must equal zero; this leads to six independent equilibrium equations ($\Sigma F_X = 0$, $\Sigma F_Y = 0$, $\Sigma F_Z = 0$, $\Sigma M_X = 0$, $\Sigma M_Y = 0$, $\Sigma M_Z = 0$). 3-D support reactions must be correctly modeled based on the type of connection at each point of support, however the 3-D reactions can be determined by solving equilibrium equations developed using a series of 2-D views.

<u>Further Example Problems</u> (solutions in GFSA format begin on page 16-42)

Example 16-8 Determine the resultant of the force system shown below, and specify its coordinate direction angles.

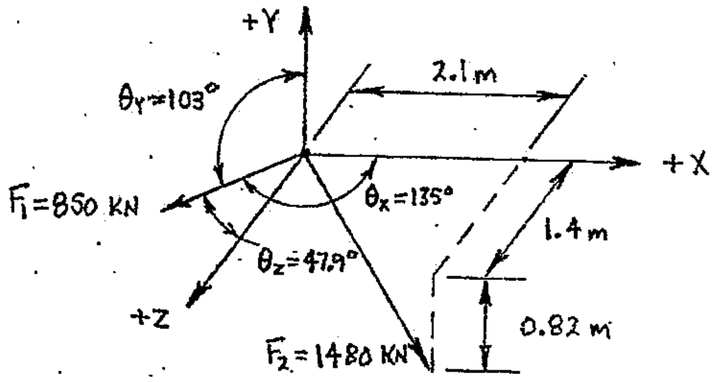

Example 16-9 A force-couple system is applied to a small block as shown below. Force F_1 is parallel to the Y-axis. Determine the total moment (M_A) produced by the force-couple system with respect to point A, and specify M_A's coordinate direction angles.

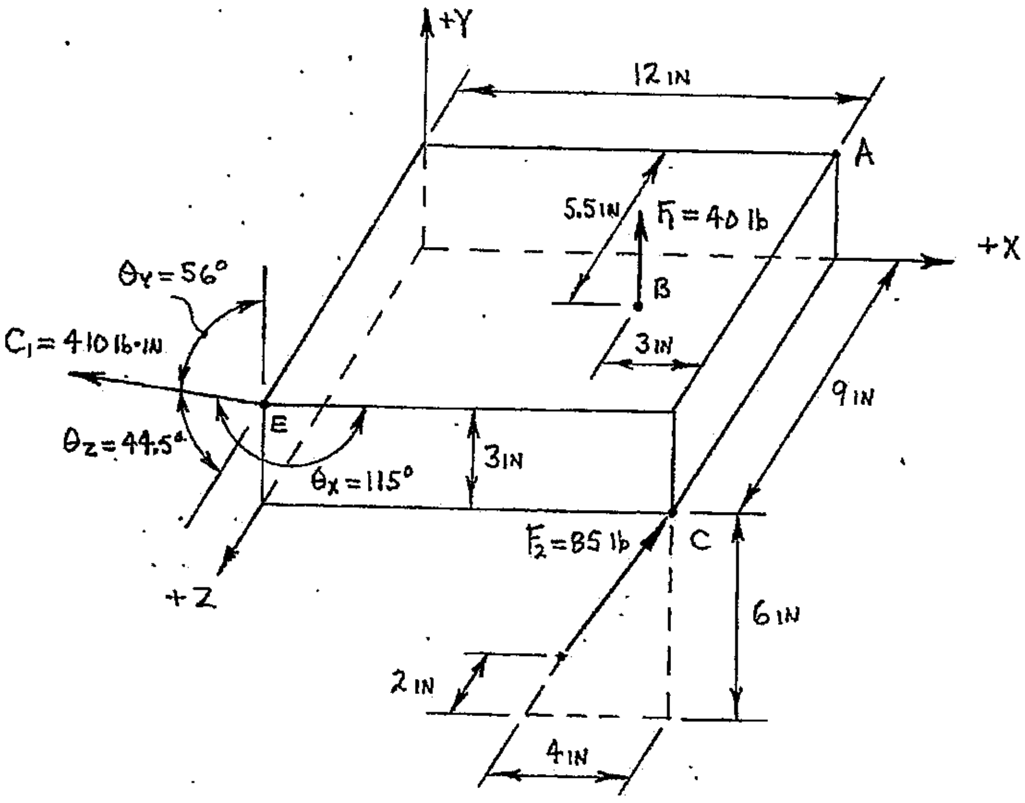

FURTHER EXAMPLE PROBLEMS (solutions in GFSA format are on the following pages)

Example 16-10 A rectangular plate of negligible weight is supported by a hinge at location A and cable BC. Two forces are applied to the plate as shown below. Determine the tension in cable BC, and all reaction components acting on the plate at hinge A.

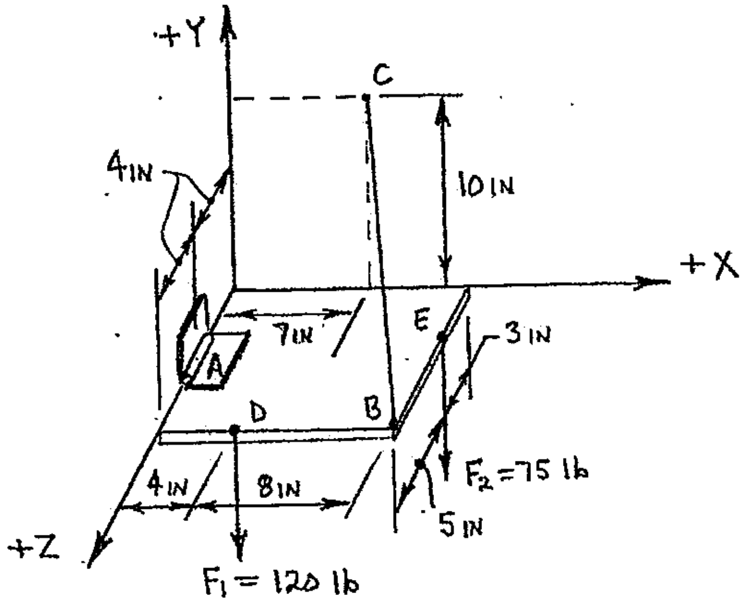

PROBLEM: EXAMPLE 16-8

GIVEN: FORCE SYSTEM SHOWN BELOW

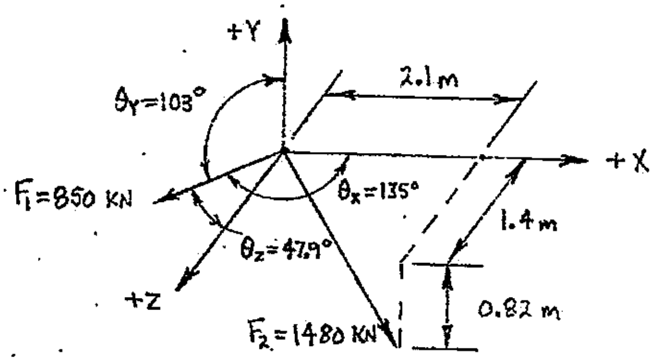

FIND: DETERMINE THE SINGLE RESULTANT FORCE, AND SPECIFY THE RESULT USING ITS COORDINATE DIRECTION ANGLES.

SOLUTION:

WORKING DIAGRAM OF FORCE SYSTEM:

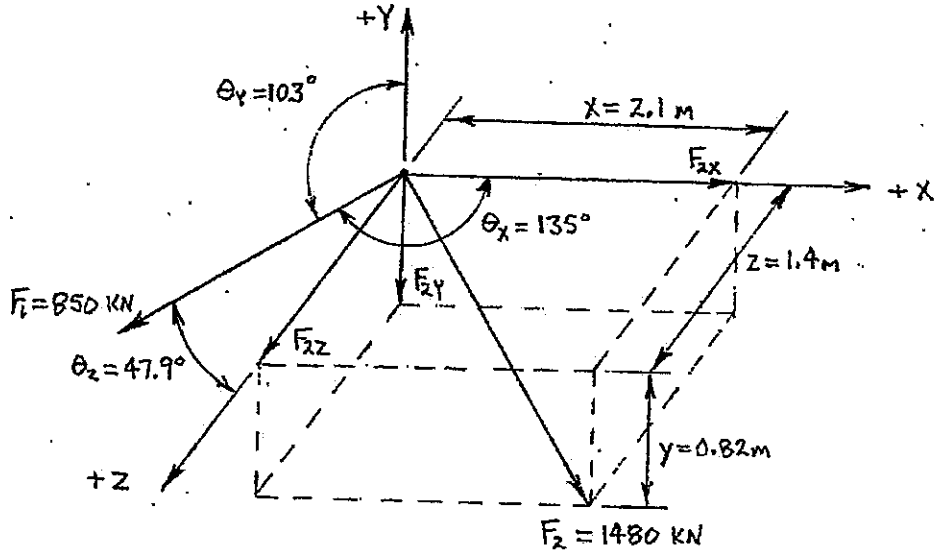

CONT'D.

PROBLEM: EXAMPLE 16-8 (CONT'D.)

DETERMINE THE X, Y + Z COMPONENTS OF FORCE F_1:

$F_{1X} = F_1 (\cos \theta_X)$

$F_{1X} = (850\ KN)(\cos 135°)$

$F_{1X} = -601.041\ KN$

$F_{1X} = 601.041\ KN$

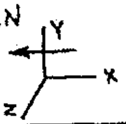

$F_{1Y} = F_1 (\cos \theta_Y)$

$F_{1Y} = (850\ KN)(\cos 103°)$

$F_{1Y} = -191.208\ KN$

$F_{1Y} = 191.208\ KN$

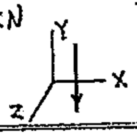

$F_{1Z} = F_1 (\cos \theta_Z)$

$F_{1Z} = (850\ KN)(\cos 47.9°)$

$F_{1Z} = +569.863\ KN$

$F_{1Z} = 569.863\ KN$

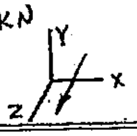

DETERMINE LENGTH OF BOX'S DIAGONAL: (FOR BOX ENCLOSING FORCE F_2)

$d = \sqrt{x^2 + y^2 + z^2}$

$d = \sqrt{(2.1m)^2 + (0.82m)^2 + (1.4m)^2}$

$d = 2.65375\ m$

CALCULATE THE X, Y AND Z COMPONENTS OF FORCE F_2:

$F_{2X} = \left(\frac{x}{d}\right) F_2$

$F_{2X} = \left(\frac{2.1\ m}{2.65375\ m}\right)(1480\ KN)$

$F_{2X} = 1171.17\ KN$

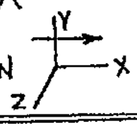

$F_{2Y} = \left(\frac{y}{d}\right) F_2$

$F_{2Y} = \left(\frac{0.82\ m}{2.65375\ m}\right)(1480\ KN)$

$F_{2Y} = 457.315\ KN$

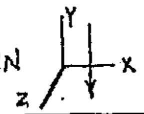

CONT'D.

PROBLEM: EXAMPLE 16-8 (CONT'D.)

$$F_{2z} = \left(\frac{z}{d}\right) F_2$$

$$F_{2z} = \left(\frac{1.4\,m}{2.65375\,m}\right)(1480\ KN)$$

$$F_{2z} = 780.782\ KN$$

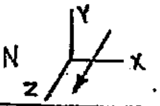

DETERMINE THE RESULTANT'S X-COMPONENT, F_{RX}:

$$F_{RX} = \Sigma F_X$$

$$F_{RX} = \pm F_{1X} \pm F_{2X}$$

$$F_{RX} = -F_{1X} + F_{2X}$$

$$F_{RX} = -601.041\ KN + 1171.17\ KN$$

$$F_{RX} = +570.129\ KN$$

$$F_{RX} = 570.129\ KN$$

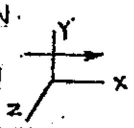

DETERMINE THE RESULTANT'S Y-COMPONENT, F_{RY}:

$$F_{RY} = \Sigma F_Y$$

$$F_{RY} = \pm F_{1Y} \pm F_{2Y}$$

$$F_{RY} = -F_{1Y} - F_{2Y}$$

$$F_{RY} = -191.208\ KN - 457.315\ KN$$

$$F_{RY} = -648.523\ KN$$

$$F_{RY} = 648.523\ KN$$

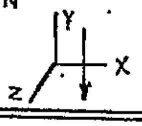

CONT'D.

PROBLEM: EXAMPLE 16-8 (CONT'D.)

DETERMINE THE RESULTANT'S Z-COMPONENT, F_{RZ}:

$$F_{RZ} = \Sigma F_Z$$

$$F_{RZ} = \pm F_{1Z} \pm F_{2Z}$$

$$F_{RZ} = +F_{1Z} + F_{2Z}$$

$$F_{RZ} = +569.863 \text{ KN} + 780.782 \text{ KN}$$

$$F_{RZ} = +1350.65 \text{ KN}$$

$$F_{RZ} = 1350.65 \text{ KN}$$

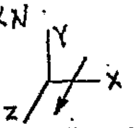

CALCULATE THE RESULTANT'S MAGNITUDE, F_R:

$$F_R = \sqrt{(F_{RX})^2 + (F_{RY})^2 + (F_{RZ})^2}$$

$$F_R = \sqrt{(+570.129 \text{ KN})^2 + (-648.523 \text{ KN})^2 + (+1350.65 \text{ KN})^2}$$

$$F_R = 1603.09 \text{ KN}$$ (MAGNITUDE ONLY)

DETERMINE F_R'S COORDINATE DIRECTION ANGLES ($\theta_X, \theta_Y, \theta_Z$):

$$\theta_X = \cos^{-1}\left(\frac{F_{RX}}{F_R}\right)$$

$$\theta_X = \cos^{-1}\left(\frac{+570.129 \text{ KN}}{1603.09 \text{ KN}}\right)$$

$$\theta_X = 69.1671^\circ$$

$$\theta_Y = \cos^{-1}\left(\frac{F_{RY}}{F_R}\right)$$

$$\theta_Y = \cos^{-1}\left(\frac{-648.523 \text{ KN}}{1603.09 \text{ KN}}\right)$$

$$\theta_Y = 113.863^\circ$$

$$\theta_Z = \cos^{-1}\left(\frac{F_{RZ}}{F_R}\right)$$

$$\theta_Z = \cos^{-1}\left(\frac{+1350.65 \text{ KN}}{1603.09 \text{ KN}}\right)$$

$$\theta_Z = 32.5918^\circ$$

CONT'D.

PROBLEM: EXAMPLE 16-8 (CONT'D.)

VERIFY THE CALCULATED COORDINATE DIRECTION ANGLES:

$$(\cos \theta_X)^2 + (\cos \theta_Y)^2 + (\cos \theta_Z)^2 = 1$$

$$(\cos 69.1671°)^2 + (\cos 113.863°)^2 + (\cos 32.5918°)^2 = 1$$

$$1.00000 = 1$$ (COORDINATE DIRECTION ANGLES ARE CORRECT)

ANSWER:

$F_R = 1603$ kN

$\theta_X = 69.17°$

$\theta_Y = 113.9°$

$\theta_Z = 32.59°$

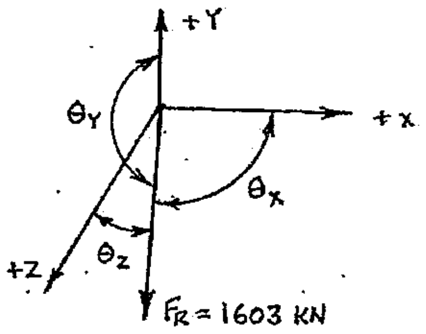

PROBLEM: EXAMPLE 16-9

GIVEN: A FORCE-COUPLE SYSTEM IS APPLIED TO A SMALL BLOCK AS SHOWN BELOW. FORCE F_1 IS PARALLEL TO THE Y-AXIS

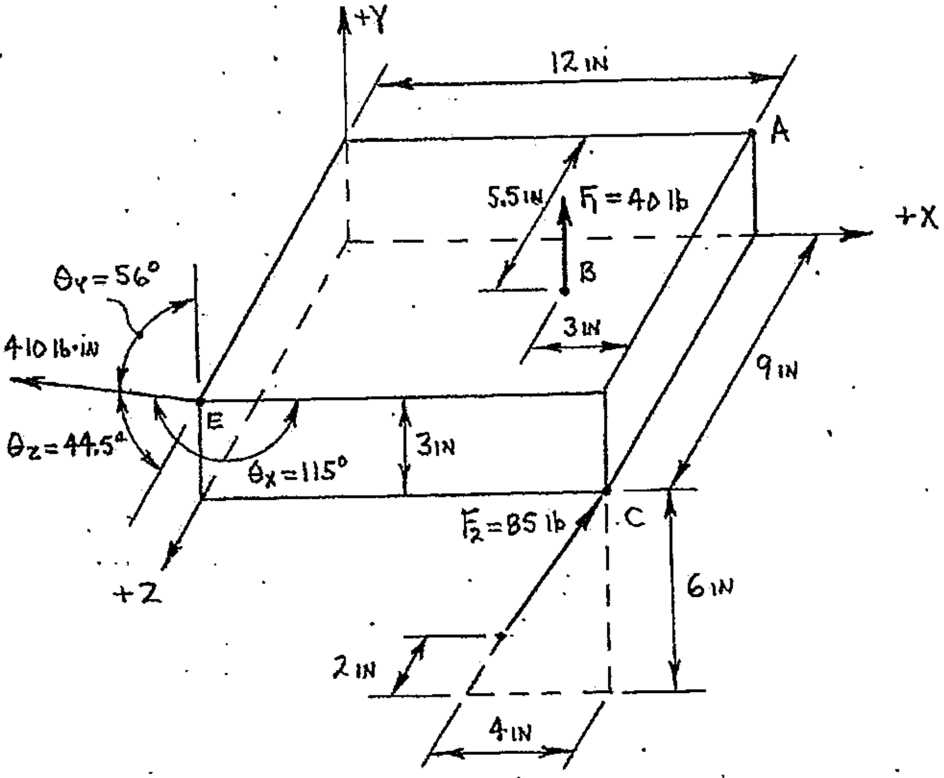

FIND: DETERMINE THE TOTAL MOMENT PRODUCED BY THE FORCE-COUPLE SYSTEM WITH RESPECT TO POINT A. SPECIFY M_A'S COORDINATE DIRECTION ANGLES.

SOLUTION:

SOLVE FOR C_{1X}:

$C_{1X} = (\cos\theta_X)C_1$

$C_{1X} = (\cos 115°)(410\ lb\cdot in)$

$C_{1X} = -173.273\ lb\cdot in$

$C_{1X} = \underline{173.273\ lb\cdot in}$ (Z–Y–X rotation sketch)

SOLVE FOR C_{1Y}:

$C_{1Y} = (\cos\theta_Y)C_1$

$C_{1Y} = (\cos 56°)(410\ lb\cdot in)$

$C_{1Y} = +229.269\ lb\cdot in$

$C_{1Y} = \underline{229.269}$ (Y–X–Z rotation sketch)

CONT'D.

PROBLEM: EXAMPLE 16-9 (CONT'D.)

SOLVE FOR C_{1Z}:

$C_{1Z} = (\cos\theta_Z)\,C_1$

$C_{1Z} = (\cos 44.5^\circ)(410 \text{ lb}\cdot\text{in})$

$C_{1Z} = +292.433 \text{ lb}\cdot\text{in}$

$C_{1Z} = 292.433 \text{ lb}\cdot\text{in}$

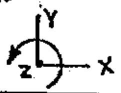

WORKING DIAGRAM FOR X, Y AND Z COMPONENTS OF FORCE F_2:

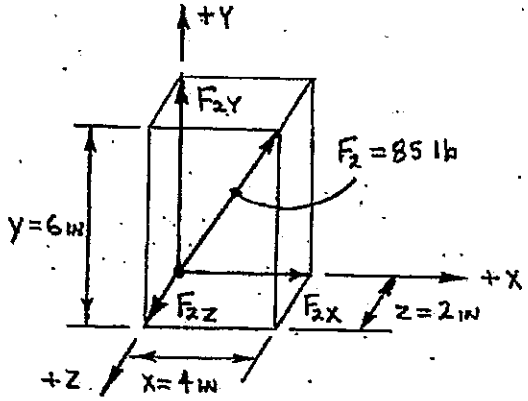

PHYSICAL LENGTH OF BOX'S DIAGONAL, d:

$d = \sqrt{x^2 + y^2 + z^2}$

$d = \sqrt{(4\text{ in})^2 + (6\text{ in})^2 + (2\text{ in})^2}$

$d = 7.48331 \text{ in}$

X-COMPONENT OF FORCE F_2:

$F_{2X} = \left(\frac{x}{d}\right)F_2$

$F_{2X} = \left(\frac{4\text{ in}}{7.48331\text{ in}}\right)(85\text{ lb})$

$F_{2X} = 45.4344 \text{ lb}$

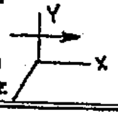

CONT'D.

PROBLEM: EXAMPLE 16-9 (CONT'D.)

Y-COMPONENT OF FORCE F_2:

$$F_{2Y} = \left(\frac{y}{d}\right) F_2$$

$$F_{2Y} = \left(\frac{6\ \text{in}}{7.48331\ \text{in}}\right)(85\ \text{lb})$$

$$F_{2Y} = 68.1517\ \text{lb}$$

Z-COMPONENT OF FORCE F_2:

$$F_{2Z} = \left(\frac{z}{d}\right) F_2$$

$$F_{2Z} = \left(\frac{2\ \text{in}}{7.48331\ \text{in}}\right)(85\ \text{lb})$$

$$F_{2Z} = 22.7172\ \text{lb}$$

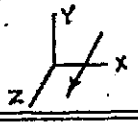

WORKING DIAGRAM OF THE Y-Z VIEW:

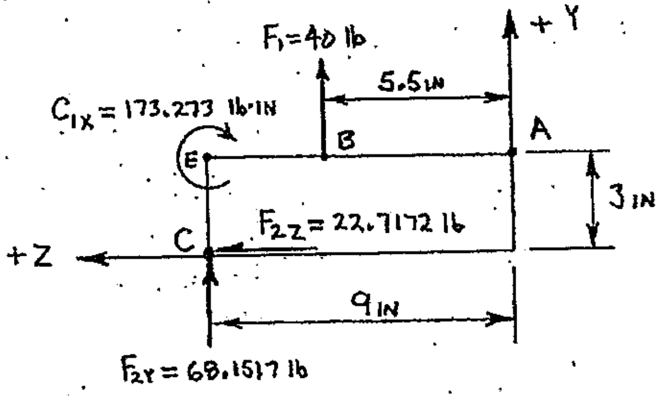

X-COMPONENT OF M_A:

$$M_{AX} = \Sigma M_{AX}$$

$$M_{AX} = \pm C_{1X} \pm [(F_1)(d\perp)] \pm [(F_{2Y})(d\perp)] \pm [(F_{2Z})(d\perp)]$$

$$M_{AX} = -C_{1X} - [(F_1)(5.5\ \text{in})] - [(F_{2Y})(9\ \text{in})] - [(F_{2Z})(3\ \text{in})]$$

$$M_{AX} = -173.273\ \text{lb}\cdot\text{in} - [(40\ \text{lb})(5.5\ \text{in})] - [(68.1517\ \text{lb})(9\ \text{in})] - [(22.7172\ \text{lb})(3\ \text{in})]$$

$$M_{AX} = -1074.79\ \text{lb}\cdot\text{in}$$

$$M_{AX} = 1074.79\ \text{lb}\cdot\text{in}$$

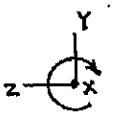

CONT'D.

PROBLEM: EXAMPLE 16-9 (CONT'D.)

WORKING DIAGRAM OF THE X-Z VIEW:

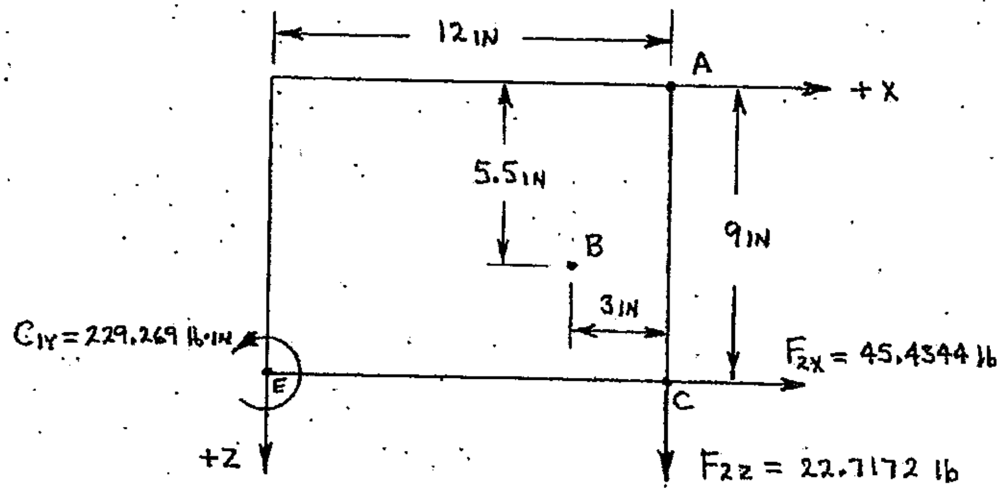

Y-COMPONENT OF M_A:

$$M_{AY} = \Sigma M_{AY}$$

$$M_{AY} = \pm C_{1Y} \pm [(F_{2X})(d\perp)]$$

$$M_{AY} = +C_{1Y} + [(F_{2X})(9\text{ IN})]$$

$$M_{AY} = +229.269\text{ lb·IN} + [(45.4344\text{ lb})(9\text{ IN})]$$

$$M_{AY} = +638.179\text{ lb·IN}$$

$$M_{AY} = 638.179\text{ lb·IN}$$

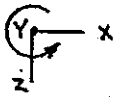

CONT'D.

PROBLEM: EXAMPLE 16-9 (CONT'D.)

WORKING DIAGRAM OF THE Y–X VIEW:

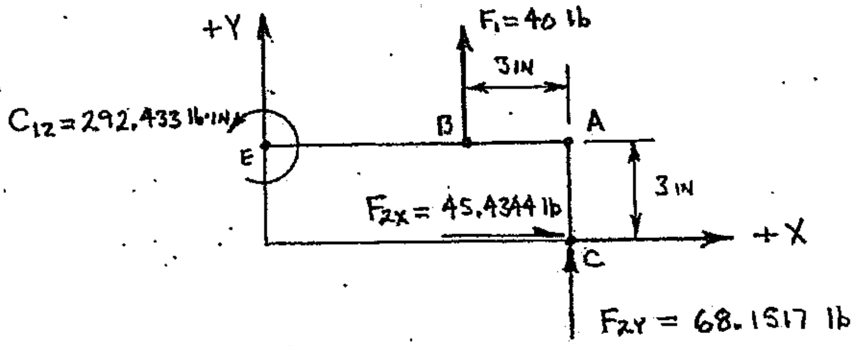

Z-COMPONENT OF M_A:

$$M_{AZ} = \Sigma M_{AZ}$$

$$M_{AZ} = \pm C_{12} \pm [(F_1)(d\perp)] \pm [(F_{2X})(d\perp)]$$

$$M_{AZ} = +C_{12} - [(F_1)(3\text{ IN})] + [(F_{2X})(3\text{ IN})]$$

$$M_{AZ} = +292.433\text{ lb}\cdot\text{IN} - [(40\text{ lb})(3\text{ IN})] + [(45.4344\text{ lb})(3\text{ IN})]$$

$$M_{AZ} = +308.736\text{ lb}\cdot\text{IN}$$

$$M_{AZ} = 308.736\text{ lb}\cdot\text{IN}$$ (counterclockwise about Z; axes Y, X, Z)

CALCULATE MAGNITUDE OF M_A:

$$M_A = \sqrt{(M_{AX})^2 + (M_{AY})^2 + (M_{AZ})^2}$$

$$M_A = \sqrt{(-1074.79\text{ lb}\cdot\text{IN})^2 + (+638.179\text{ lb}\cdot\text{IN})^2 + (+308.736\text{ lb}\cdot\text{IN})^2}$$

$$M_A = 1287.54\text{ lb}\cdot\text{IN}$$ (MAGNITUDE ONLY).

CONT'D.

PROBLEM: EXAMPLE 16-9 (CONT'D.)

COORDINATE DIRECTION ANGLES FOR M_A:

$$\theta_X = \cos^{-1}\left(\frac{M_{AX}}{M_A}\right) \qquad \theta_Y = \cos^{-1}\left(\frac{M_{AY}}{M_A}\right)$$

$$\theta_X = \cos^{-1}\left(\frac{-1074.79\ \text{lb}\cdot\text{in}}{1287.54\ \text{lb}\cdot\text{in}}\right) \qquad \theta_Y = \cos^{-1}\left(\frac{+638.179\ \text{lb}\cdot\text{in}}{1287.54\ \text{lb}\cdot\text{in}}\right)$$

$$\theta_X = \underline{\underline{146.591^\circ}} \qquad \theta_Y = \underline{\underline{60.2869^\circ}}$$

$$\theta_Z = \cos^{-1}\left(\frac{M_{AZ}}{M_A}\right)$$

$$\theta_Z = \cos^{-1}\left(\frac{+308.736\ \text{lb}\cdot\text{in}}{1287.54\ \text{lb}\cdot\text{in}}\right)$$

$$\theta_Z = \underline{\underline{76.1260^\circ}}$$

VERIFY THE CALCULATED COORDINATE DIRECTION ANGLE FOR M_A:

$$(\cos\theta_X)^2 + (\cos\theta_Y)^2 + (\cos\theta_Z)^2 = 1$$

$$(\cos 146.591^\circ)^2 + (\cos 60.2869^\circ) + (\cos 76.1260^\circ) = 1$$

$\underline{\underline{1.00000 = 1}}$ (COORDINATE DIRECTION ANGLES ARE CORRECT)

ANSWER:

$M_A = 1288$ lb·in

$\theta_X = 146.6°$

$\theta_Y = 60.29°$

$\theta_Z = 76.13°$

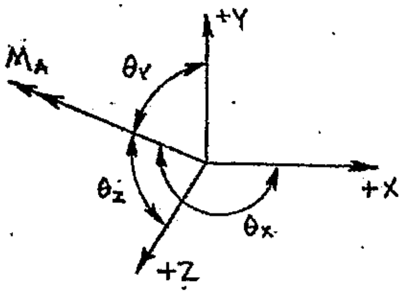

PROBLEM: EXAMPLE 16-10

GIVEN: A RECTANGULAR PLATE OF NEGLIGIBLE WEIGHT IS SUPPORTED BY A HINGE AT A AND CABLE BC. TWO FORCES ARE APPLIED TO THE PLATE AS SHOWN BELOW.

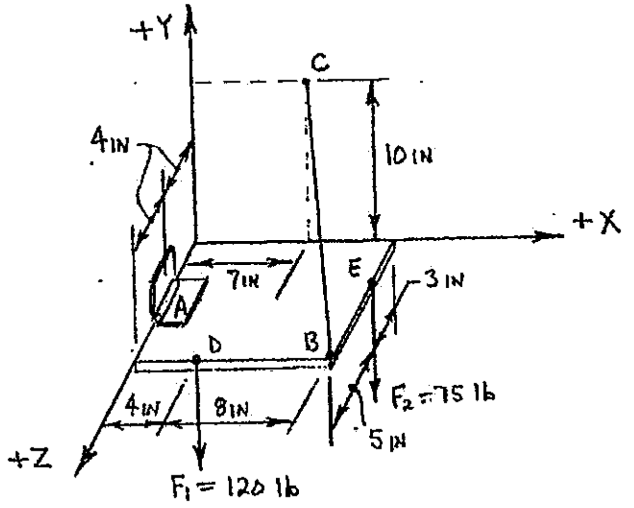

FIND: DETERMINE THE TENSION IN CABLE BC AND ALL REACTION COMPONENTS ACTING ON THE PLATE AT HINGE A.

SOLUTION:

WORKING DIAGRAM OF CABLE BC: (TO DEVELOP X, Y + Z COMPONENTS)

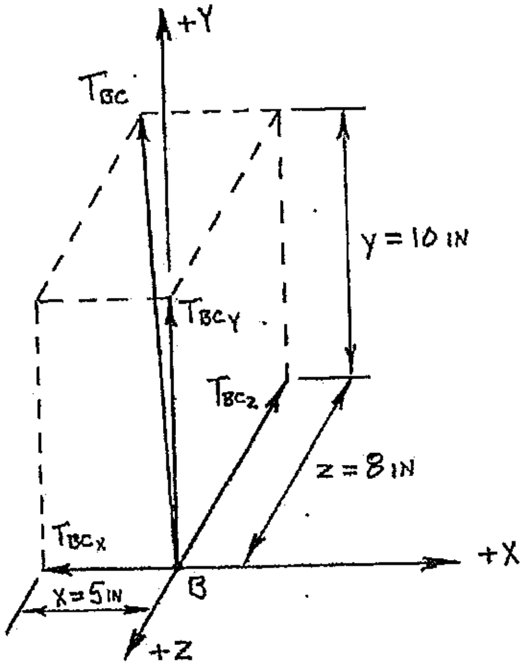

CONT'D.

PROBLEM: EXAMPLE 16-10 (CONT'D.)

PHYSICAL LENGTH OF CABLE BC:

$$d_{BC} = \sqrt{x^2 + y^2 + z^2}$$

$$d_{BC} = \sqrt{(5\text{ IN})^2 + (10\text{ IN})^2 + (8\text{ IN})^2}$$

$$d_{BC} = \underline{13.7477\text{ IN}}$$

DEVELOP X, Y AND Z COMPONENTS OF CABLE BC:

$$T_{BC_X} = \left(\frac{x}{d_{BC}}\right) T_{BC}$$

$$T_{BC_X} = \left(\frac{5\text{ IN}}{13.7477\text{ IN}}\right) T_{BC}$$

$$T_{BC_X} = 0.363697\ T_{BC}$$

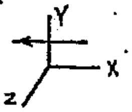

$$T_{BC_Y} = \left(\frac{y}{d_{BC}}\right) T_{BC}$$

$$T_{BC_Y} = \left(\frac{10\text{ IN}}{13.7477\text{ IN}}\right) T_{BC}$$

$$T_{BC_Y} = 0.727394\ T_{BC}$$

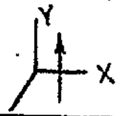

$$T_{BC_Z} = \left(\frac{z}{d_{BC}}\right) T_{BC}$$

$$T_{BC_Z} = \left(\frac{8\text{ IN}}{13.7477\text{ IN}}\right) T_{BC}$$

$$T_{BC_Z} = 0.581916\ T_{BC}$$

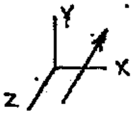

CONT'D.

PROBLEM: EXAMPLE 16-10 (CONT'D.)

3-D FBD OF PLATE:

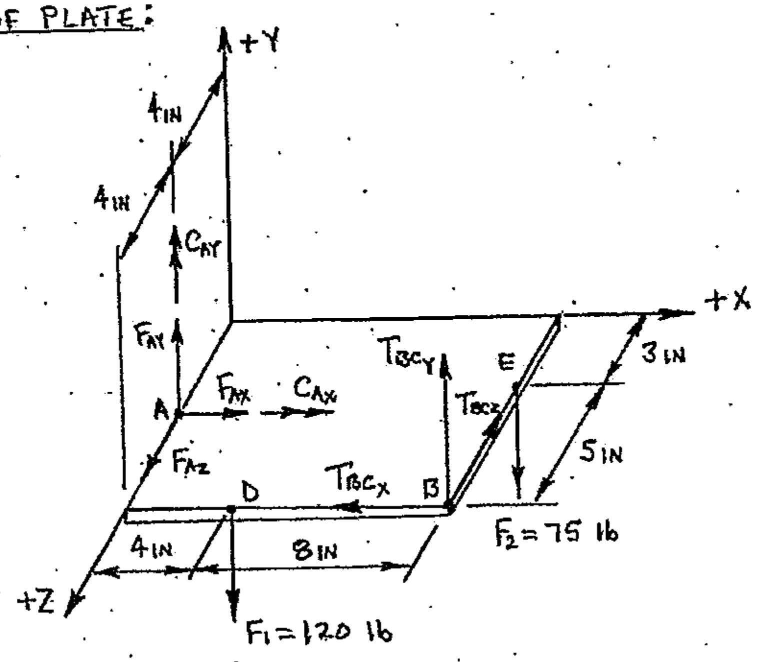

2-D FBD OF THE Y-X VIEW:

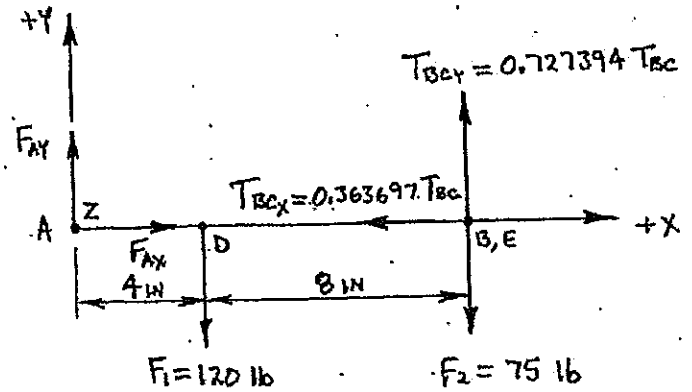

DETERMINE T_{BC}:

$$\Sigma M_A = 0$$

$$0 = \pm[(F_1)(d\perp)] \pm [(F_2)(d\perp)] \pm [(T_{BCY})(d\perp)]$$

CONT'D.

PROBLEM: EXAMPLE 16-10 (CONT'D.)

$$0 = -[(F_1)(4\ in)] - [(F_2)(12\ in)] + [(0.727394\ T_{BC})(12\ in)]$$

$$T_{BC} = \frac{+[(F_1)(4\ in)] + [(F_2)(12\ in)]}{(0.727394)(12\ in)}$$

$$T_{BC} = \frac{+[(120\ lb)(4\ in)] + [(75\ lb)(12\ in)]}{(0.727394)(12\ in)}$$

$$T_{BC} = +158.099\ lb$$

$$T_{BC} = \underline{\underline{158.099\ lb\ \ (TENSION)}}$$

DETERMINE F_{AY}:

$$\Sigma F_Y = 0$$

$$0 = \pm F_{AY} \pm F_1 \pm F_2 \pm T_{BCY}$$

$$0 = +F_{AY} - F_1 - F_2 + 0.727394\ T_{BC}$$

$$F_{AY} = +F_1 + F_2 - 0.727394\ T_{BC}$$

$$F_{AY} = +120\ lb + 75\ lb - (0.727394)(+158.099\ lb)$$

$$F_{AY} = +79.9997\ lb$$

$$F_{AY} = \underline{\underline{79.9997\ lb}}$$

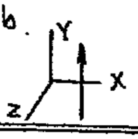

DETERMINE F_{AX}:

$$\Sigma F_X = 0$$

$$0 = \pm F_{AX} \pm T_{BCX}$$

$$0 = +F_{AX} - 0.363697\ T_{BX}$$

$$F_{AX} = +0.363697\ T_{BX}$$

$$F_{AX} = +(0.363697)(+158.099\ lb)$$

$$F_{AX} = +57.5001\ lb = \underline{\underline{57.5001\ lb}}$$

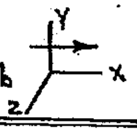

CONT'D.

PROBLEM: EXAMPLE 16-10 (CONT'D.)

2-D FBD OF THE Y-Z VIEW:

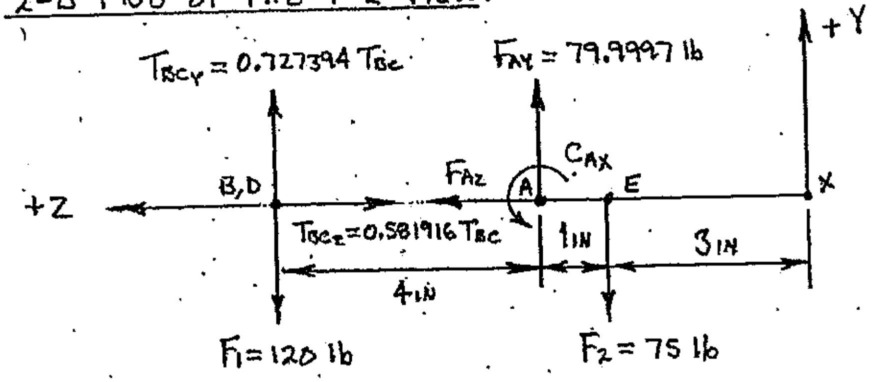

DETERMINE F_{AZ}:

$\Sigma F_Z = 0$

$0 = \pm T_{BC_Z} \pm F_{AZ}$

$0 = -0.581916\ T_{BC} + F_{AZ}$

$F_{AZ} = +0.581916\ T_{BC}$ AND: $T_{BC} = +158.099$ lb

$F_{AZ} = +(0.581916)(+158.099\text{ lb})$

$F_{AZ} = +92.0003$ lb

$F_{AZ} = 92.0003$ lb (Y, X, Z axes; directed along +Z)

DETERMINE C_{AX}:

$\Sigma M_A = 0$

$0 = \pm[(T_{BC_Y})(d\perp)] \pm [(F_1)(d\perp)] \pm C_{AX} \pm [(F_2)(d\perp)]$

$0 = -[(0.727394\ T_{BC})(4\text{ IN})] + [(F_1)(4\text{ IN})] + C_{AX} - [(F_2)(1\text{ IN})]$

$C_{AX} = +[(0.727394\ T_{BC})(4\text{ IN})] - [(F_1)(4\text{ IN})] + [(F_2)(1\text{ IN})]$

$C_{AX} = +[(0.727394)(+158.099\text{ lb})(4\text{ IN})] - [(120\text{ lb})(4\text{ IN})] + [(75\text{ lb})(1\text{ IN})]$

$C_{AX} = +55.0011$ lb·IN

$C_{AX} = 55.0011$ lb·IN (Y, Z, X axes; counterclockwise)

CONT'D.

PROBLEM: EXAMPLE 16-10 (CONT'D.)

2-D FBD OF THE Z-X VIEW: ($T_{BC} = +158.099$ lb)

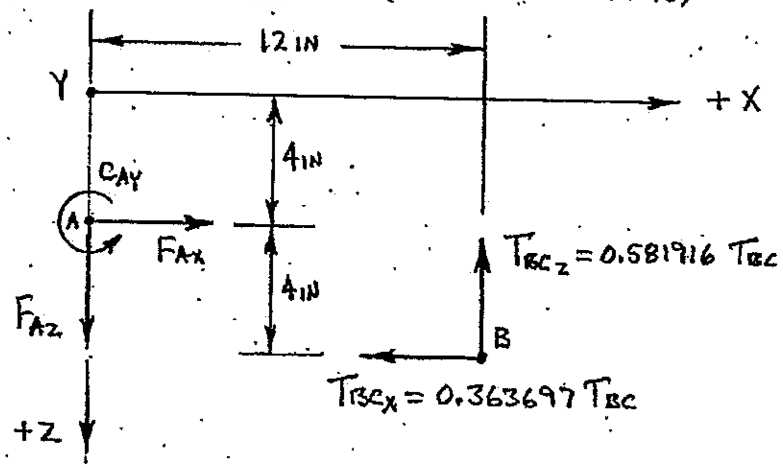

DETERMINE C_{AY}:

$$\Sigma M_A = 0$$

$$0 = \pm C_{AY} \pm [(T_{BC_X})(d\perp)] \pm [(T_{BC_Z})(d\perp)]$$

$$0 = +C_{AY} - [(0.363697\ T_{BC})(4_{IN})] + [(0.581916\ T_{BC})(12_{IN})]$$

$$C_{AY} = +[(0.363697\ T_{BC})(4_{IN})] - [(0.581916\ T_{BC})(12_{IN})]$$

$$C_{AY} = +[(0.363697)(+158.099\ lb)(4_{IN})] - [(0.581916)(+158.099\ lb)(12_{IN})]$$

$$C_{AY} = -874.004\ lb \cdot in$$

$$C_{AY} = \underline{\underline{874.004\ lb \cdot in}}$$

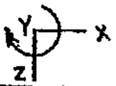

ANSWER:

$T_{BC} = 158.1$ lb (TENSION)

$F_{AX} = 57.50$ lb
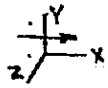

$C_{AX} = 55.00$ lb·in
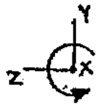

$F_{AY} = 80.00$ lb
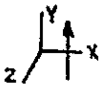

$C_{AY} = 874.0$ lb·in
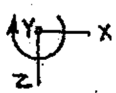

$F_{AZ} = 92.00$ lb
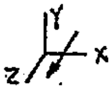

PRACTICE PROBLEMS

16.1 Force F_1 is applied at point A as shown below. Determine the X, Y and Z components of force F_1.

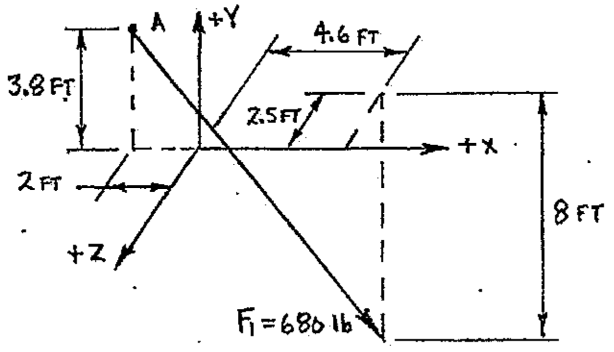

16.2 Force F_1 is applied at point A as shown below. Determine the X, Y and Z components for force F_1.

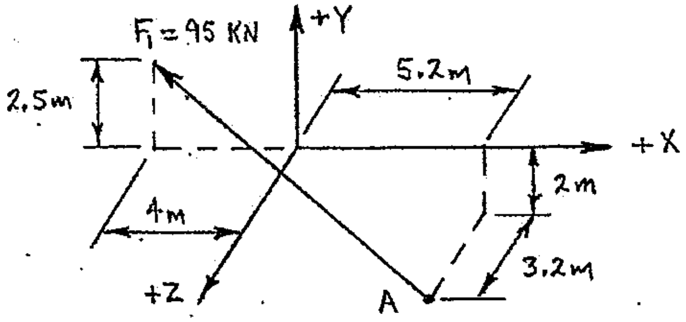

16.3 Determine the X, Y and Z components of force F_1 shown below.

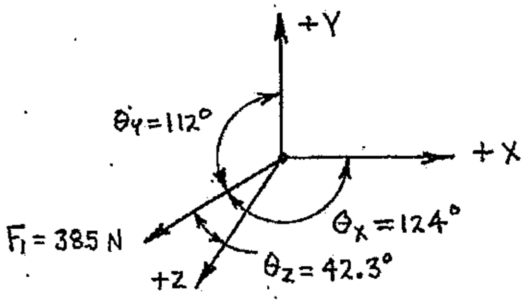

PRACTICE PROBLEMS

16.4 Determine the magnitude and coordinate direction angles for the resultant (F_R) of the force system shown below. Force F_2 lies in the X-Y plane.

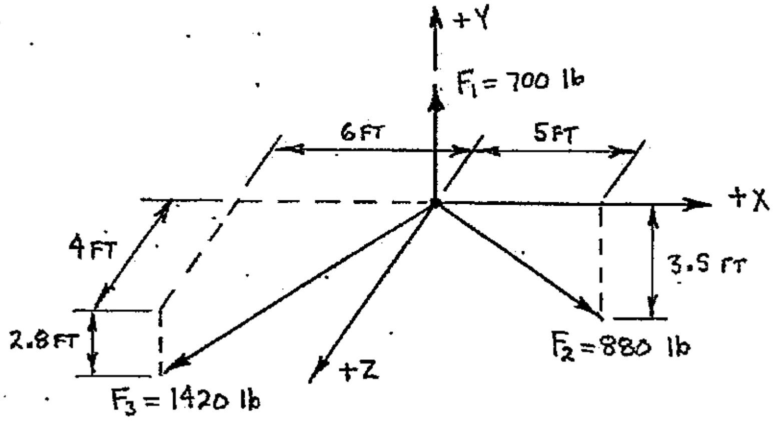

16.5 Determine the magnitude and coordinate direction angles for the resultant (F_R) of the force system shown below.

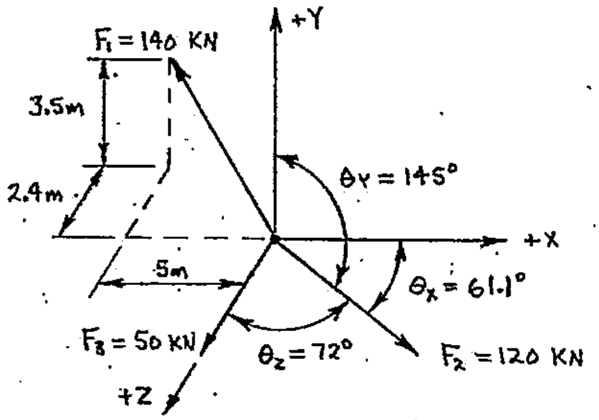

16.6 Determine the magnitude and coordinate direction angles for the moment of force F_1 with respect to point A.

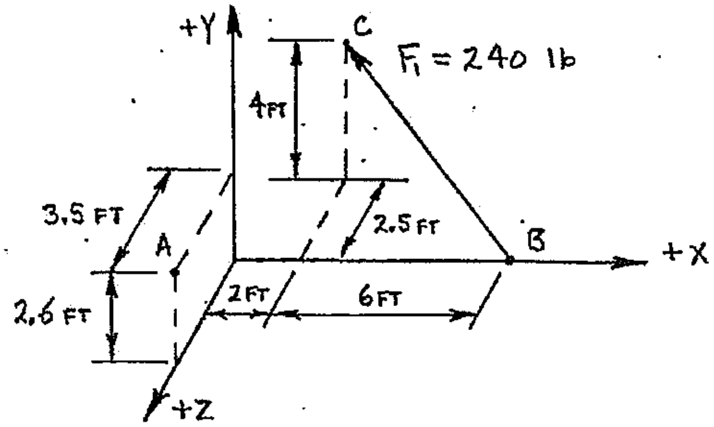

PRACTICE PROBLEMS

16.7 Determine the magnitude and coordinate direction angles of the total moment produced by the force system shown below, with respect to point C. Force F_2 is parallel to the Y-axis.

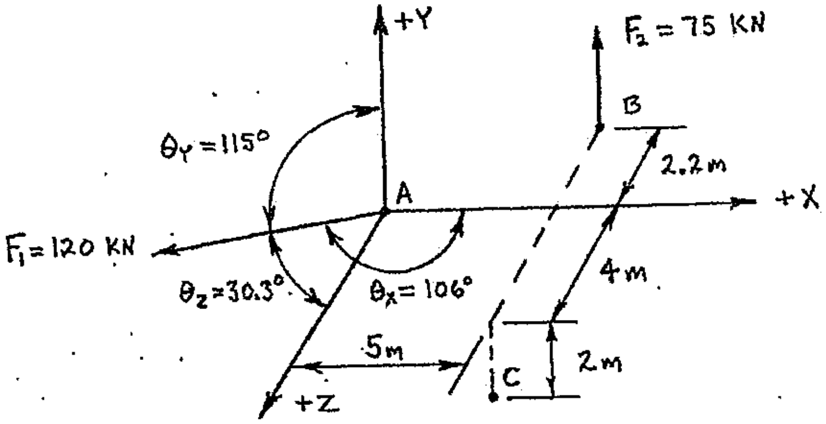

16.8 In the force system shown below, forces F_1 and F_2 are in the Y-Z plane, and F_2 is parallel to the Z-axis. Force F_3 is parallel to the X-axis. Determine the magnitude and coordinate direction angles of the total moment with respect to point E.

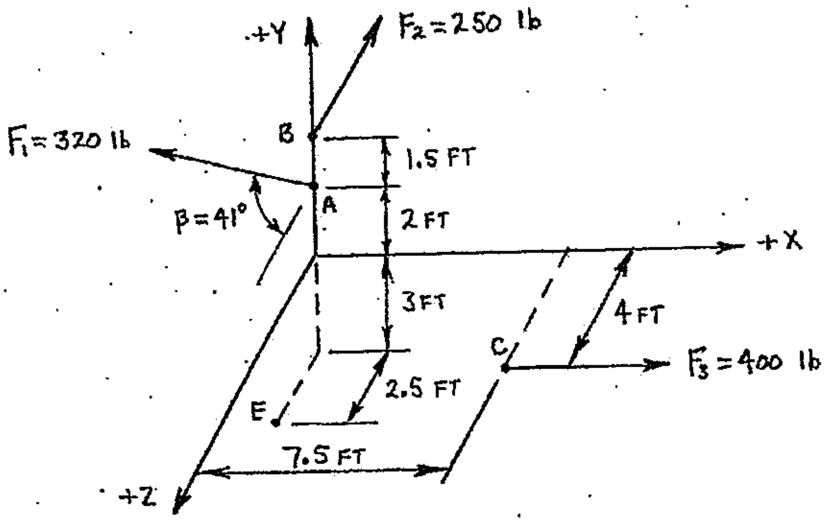

PRACTICE PROBLEMS

16.9 A force-couple system is applied as shown below. Determine the magnitude and coordinate direction angles of the total moment about point B.

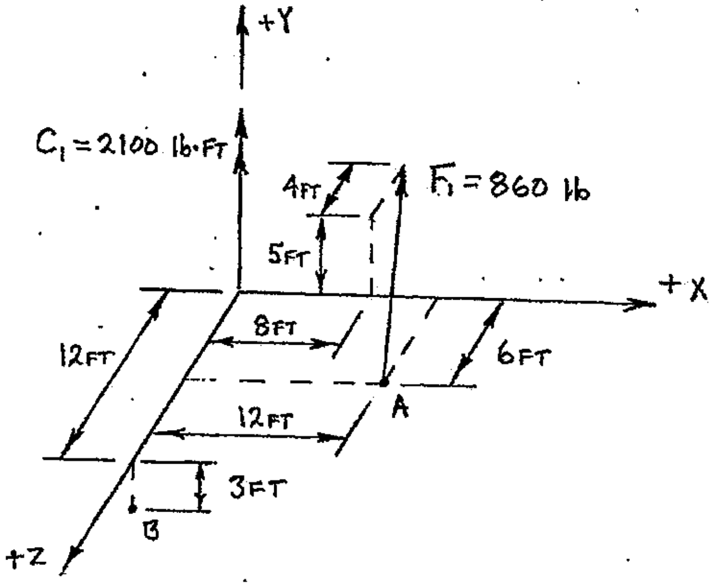

16.10 A force-couple system is applied as shown below. Determine the magnitude and coordinate direction angles of the total moment with respect to point B.

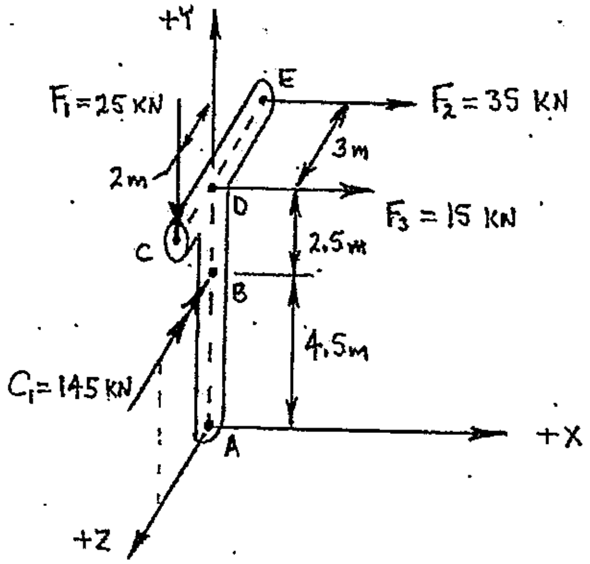

Practice Problems

16.11 Assume that a fixed support exists at point A for the post shown below. Determine all support reaction components acting on the post at point A.

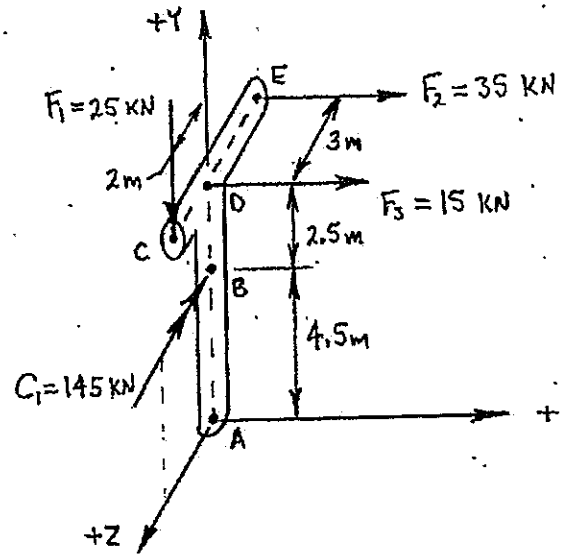

16.12 A triangular plate of negligible weight is supported by a roller at A (the roller rests on the X-Z plane), cable BC, and a ball-and-socket at E. Determine the tension in cable BC, and all support reactions acting on the plate at locations A and E.

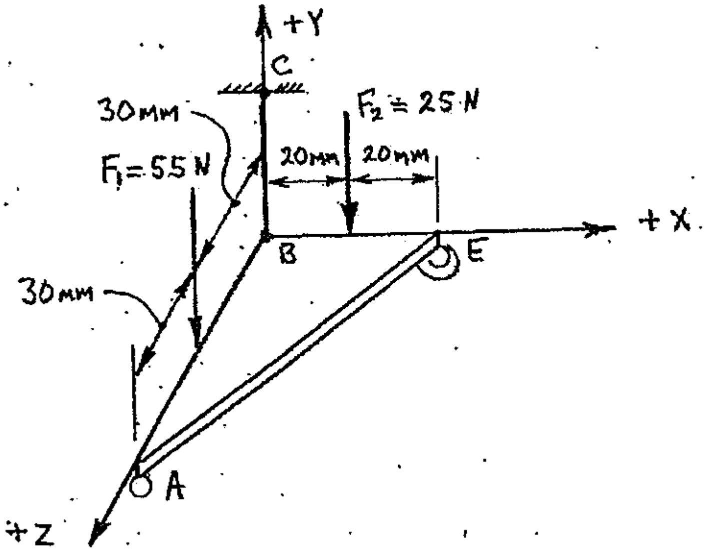

PRACTICE PROBLEMS

16.13 A plate is supported by cable AB and two properly aligned hinges. Assume that only hinge D can provide a reaction force in the X-direction. Determine the tension in cable AB, and all reactions acting on the plate at hinges C and D.

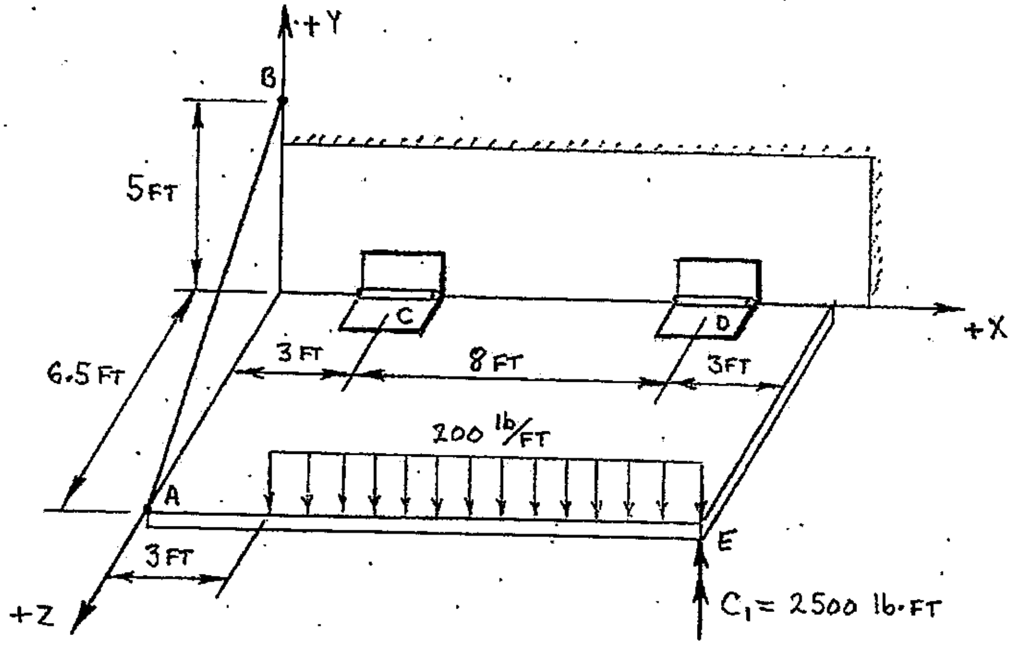

16.14 A vertical column is supported by a ball and socket at location A, and two cables (BC and CD). Force F_1 is parallel to the X-axis and force F_2 is parallel to the Z-axis. Determine the tension in each cable and all reactions acting on the column at location A.

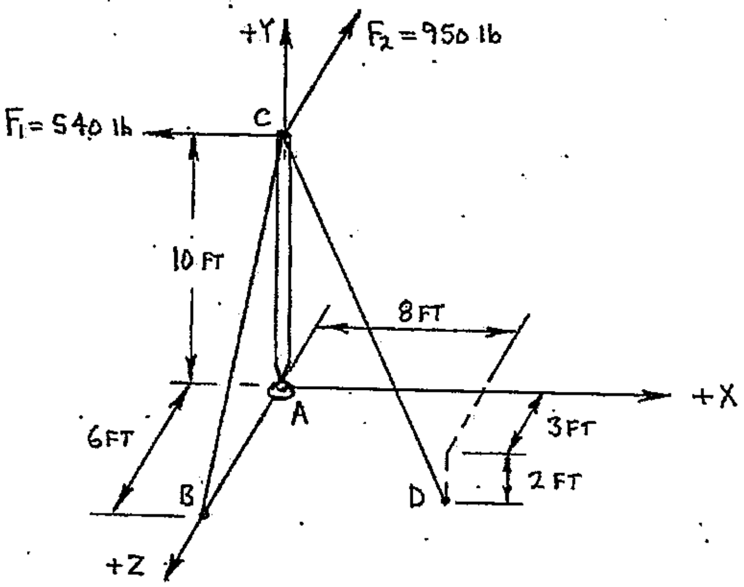

CHAPTER 17: PULLEY SYSTEMS

Pulley systems are composed of one or more pulleys, and one or more ropes (or cables, cords, chains, etc.). Pulley systems are typically used to move or lift objects, and depending on the specific arrangement of the pulley(s) and rope(s) the system can change the direction, sense and/or magnitude of forces.

There are three cables and four pulleys that make up the pulley system shown in Figure 17-1. The downward force F will cause the weight W to move upward. Also, due to the specific arrangement of the cables and pulleys, the magnitude of the force F (for static equilibrium) will be much less than the magnitude of the weight. This reduction in F's magnitude is called the *mechanical advantage* of the system.

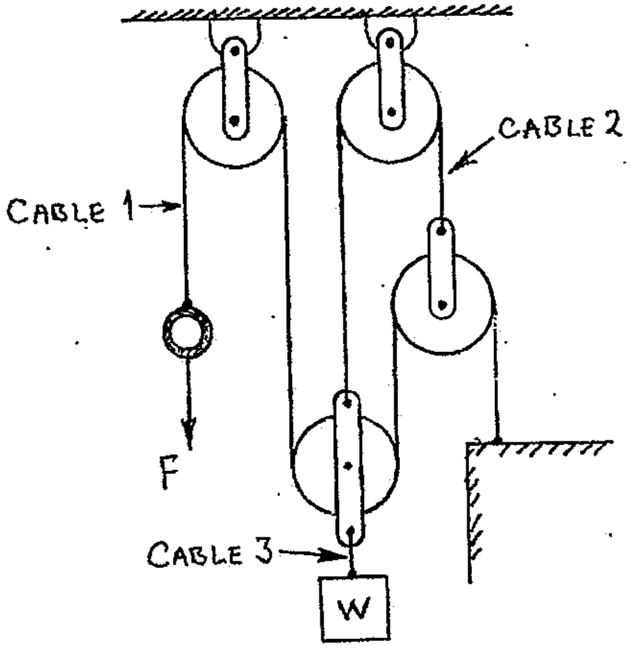

FIGURE 17-1 Example of a pulley system

Pulley systems are often employed to multiply a force that is applied manually, when the operation or location makes it impractical to use a motor driven winch to move or lift an object. However, pulley systems can be (and often are) combined with a motor driven winch to increase the force provided by the winch.

When pulley systems are used to increase the force applied to an object, a "force for distance" trade-off will occur. In general terms, if pulleys are added to a pulley system in order to decrease the force that must be applied to the cable, then the cable must be pulled a farther distance than the distance the object actually moves. Evaluation of the "force for distance" trade-off is typically done in a Dynamics course, where the motions of various objects in the pulley system are determined and studied.

PULLEYS

A pulley (or sheave) is a wheel that turns on an axel or shaft. A pulley typically has a groove (between two flanges) around its outside diameter (Figure 17-2) that is used to "contain" a rope or cable passed around the pulley. Bearings are normally incorporated between the axel and the pulley so that the pulley can rotate with very little friction. Pulleys in a pulley system can be either fixed or moveable.

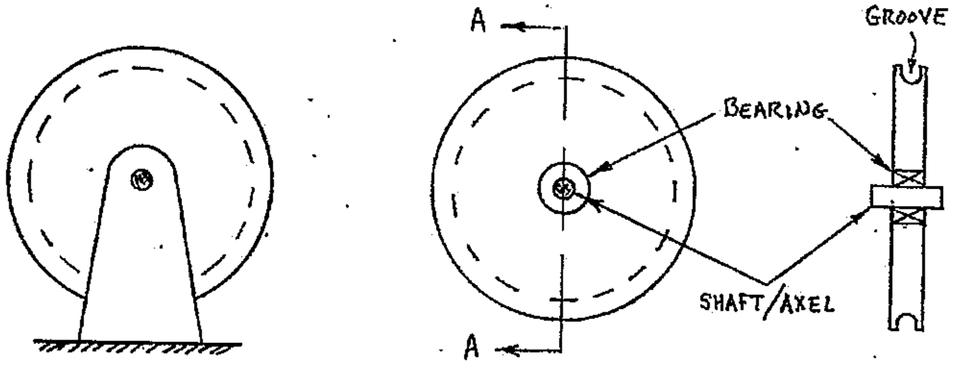

pulley shown with fixed support — pulley shown w/o fixed support — section A-A

FIGURE 17-2 Example of a typical pulley

ASSUMPTIONS

Certain assumptions will be used in this course manual for the analysis of pulley systems. These assumptions may (and probably will) be relaxed in subsequent courses, but will be used in all examples throughout this chapter. The assumptions are as follows:

- All pulleys are considered to be "ideal" pulleys. Pulleys are assumed to be infinitely strong, have negligible mass/inertia and rotate on "frictionless" bearings.
- There is no friction between the cable (or rope) and the pulleys.
- All cables (or ropes) are also considered to be "ideal". All cables are assumed to be infinitely strong and have negligible mass/weight.
- Force is transmitted without loss through each individual cable in the pulley system (the tension is constant in each individual cable regardless of how many pulleys the cable is passed around).
- The pulley systems will be evaluated only at/in STATIC EQUILIBRIUM (even though pulley systems are normally used to move objects, only the static condition will be evaluated in this chapter).

Based on the assumptions listed above, it would theoretically be possible to continue adding pulleys to a pulley system indefinitely. However, in actual practice there are limitations that tend to overcome any advantage gained by adding an excessive number of pulleys to a system.

Types of Pulley Systems

Pulley systems can be described in the most general terms as being either simple pulley systems or complex pulley systems. There is only one rope (or cable) used in a simple pulley system. A complex pulley system contains 2 or more ropes (or cables). Compound pulley systems contain both fixed and moveable pulleys; the most common name for a simple, compound pulley system is a block and tackle. A block is a frame that contains one or more pulleys; multiple pulleys in one block will have the same diameter and share a common axel shaft. A typical block and tackle consists of one rope (or cable), one fixed (standing) block and one moving (traveling) block.

Complex pulley systems (as shown in Figure 1, page 17-1) have two or more cables and are typically compound systems (contain both fixed and moveable pulleys). Since there are so many different arrangements of pulley systems, no attempt has been made to show examples of each type of system. Fortunately, all pulley systems can be evaluated using the procedure outlined below.

Procedure for Analysis of Pulley Systems

The procedure shown below uses knowledge, techniques and skills developed in previous chapters to determine internal and external forces associated with pulley systems. Care must be taken to correctly identify a force as external or internal.

Procedure:

a) On the Given diagram:
   Identify and label all pulleys (with capital letters)
   Identify and number all cables
b) Construct a FBD of each pulley, and then develop the corresponding equilibrium equation; solve the equation if possible.
c) ALWAYS construct a FBD of the weight/load.
d) Remember that a FBD can be constructed for ANYTHING. Sometimes a FBD of a GROUP of pulleys will lead to an efficient solution.
e) Combine equations generated in steps b-d and solve for any/all unknowns.
f) Report your answers completely and correctly. A cable tension is an internal force; internal forces have magnitude and mode (tension). A force being applied to a cable is an external force and must be shown with magnitude, direction and sense.

REMEMBER: Cables must always be in **tension**.

Example 17-1 The pulley system shown below (the system from Figure 17-1) is used to lift a weight of W = 500-lb. Determine the Force F required to maintain static equilibrium of the system in the position shown. Also determine the tension in cable 2.

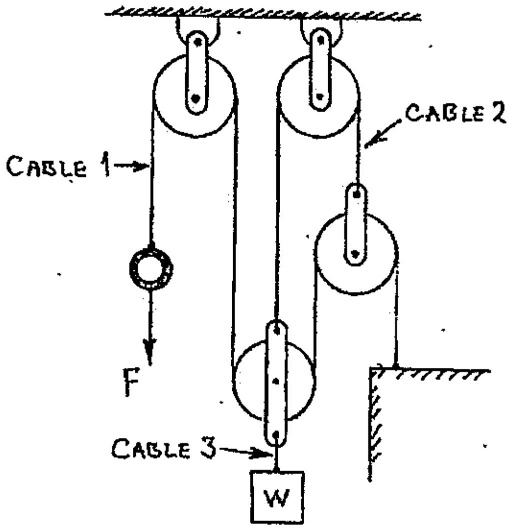

The completely labeled GIVEN diagram is shown below:

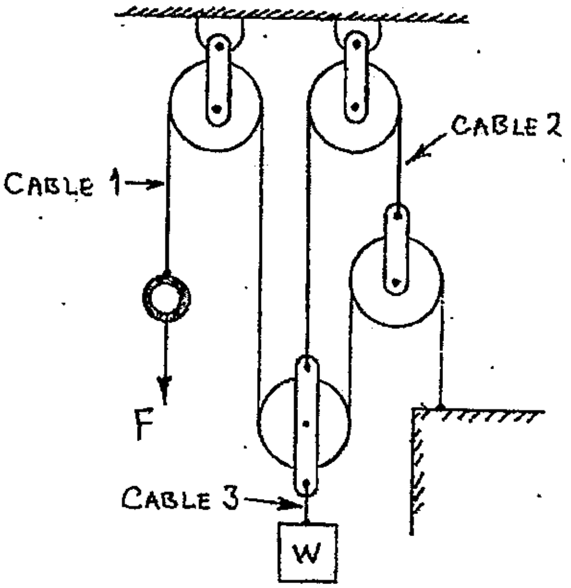

Next, free body diagrams will be constructed for pulleys A, B and D, and equilibrium equations developed for each FBD A single FBD will be constructed that includes both the weight (W) and pulley C (the weight will NOT be detached from pulley C). A FBD will also be constructed for the ring where force F is applied.

cont'd.

Example 17-1 (cont'd.)

FBD OF PULLEY A: (cable 1 cut twice)

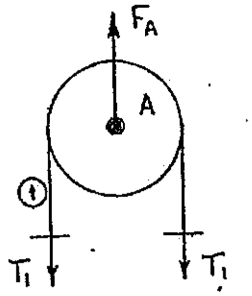

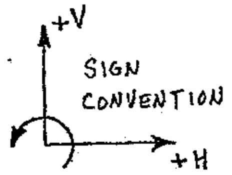

Applying static equilibrium in the vertical direction:

$$\Sigma F_V = 0$$
$$0 = \pm T_1 \pm F_A \pm T_1$$
$$0 = -T_1 + F_A - T_1$$
$$F_A = +2T_1 \qquad \text{Eq. 1}$$

FBD OF PULLEY B: (cable 2 cut twice)

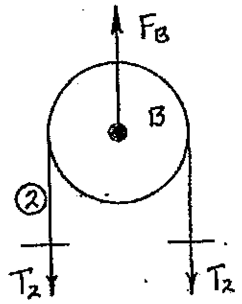

Applying static equilibrium in the vertical direction:

$$\Sigma F_V = 0$$
$$0 = \pm T_2 \pm F_B \pm T_2$$
$$0 = -T_2 + F_B - T_2$$
$$F_B = +2T_2 \qquad \text{Eq. 2}$$

cont'd.

Example 17-1: (cont'd.)

FBD OF PULLEY D: (cables 1 and 2 cut; cable 1 cut twice)

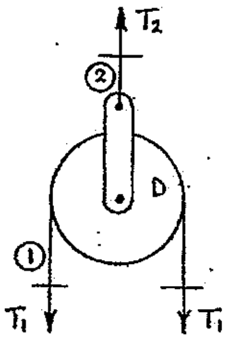

Applying static equilibrium in the vertical direction:

$$\Sigma F_V = 0$$
$$0 = \pm T_1 \pm T_2 \pm T_1$$
$$0 = -T_1 + T_2 - T_1$$
$$T_2 = +2T_1 \qquad \text{Eq. 3}$$

FBD OF PULLEY C AND WEIGHT W: (cables 1 and 2 cut; cable 1 cut twice)

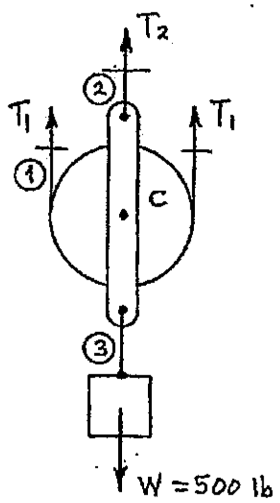

Applying static equilibrium in the vertical direction:

$$\Sigma F_V = 0$$
$$0 = \pm T_1 \pm T_2 \pm T_1 \pm W$$
$$0 = +T_1 + T_2 + T_1 - W$$
$$0 = +2T_1 + T_2 - W$$

cont'd.

Example 17-1: (cont'd.)

$$0 = +2T_1 + T_2 - W$$ and: $T_2 = +2T_1$ (Eq. 3)

$$0 = +2T_1 + (+2T_1) - W$$
$$0 = +4T_1 - W$$
$$T_1 = \frac{+W}{4}$$
$$T_1 = \frac{+500\text{ lb}}{4}$$
$$T_1 = +125.0\text{ lb}$$
$$T_1 = \underline{\underline{125\text{ lb} \quad (\text{tension})}}$$

FBD OF RING WHERE FORCE F IS APPLIED: (cut cable 1)

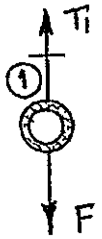

Remember: T_1 is an INTERNAL force

F is an EXTERNAL force

Applying static equilibrium in the vertical direction: (cable 1 cut)

$$\Sigma F_V = 0$$
$$0 = \pm T_1 \pm F$$
$$0 = +T_1 - F$$
$$F = +T_1$$
$$F = +(+125.0\text{ lb})$$
$$F = +125.0\text{ lb}$$
$$F = \underline{\underline{125\text{ lb} \quad \downarrow}}$$

cont'd.

Example 17-1: (cont'd.)

Determine the tension in cable T_2 using equation 3:

$$T_2 = +2T_1 \qquad \text{(Eq. 3)} \qquad \underline{\text{and}}: \; T_1 = +125.0 \text{ lb}$$

$$T_2 = +2(+125.0 \text{ lb})$$

$$T_2 = +250.0 \text{ lb}$$

$$T_2 = \underline{\underline{250 \text{ lb} \quad (\text{tension})}}$$

Answer:
$F = 125\text{-lb} \downarrow$
$T_2 = 250\text{-lb}$ (tension)

SUMMARY

Pulley systems are composed of pulleys and cables, and are normally used to lift or move large, heavy objects. The pulleys and cables are typically arranged so that the force applied to the cable is multiplied by the system so that an increased force is applied to the object to be moved.

Although many types of pulley systems exist, all types of pulley systems can be evaluated using the same procedure: free body diagrams are constructed for pulleys (or groups of pulleys), and then equilibrium equations are developed and solved for any/all unknowns in the system.

PRACTICE PROBLEMS

17.1 Determine the force F_2 required to maintain static equilibrium of the pulley system shown below.

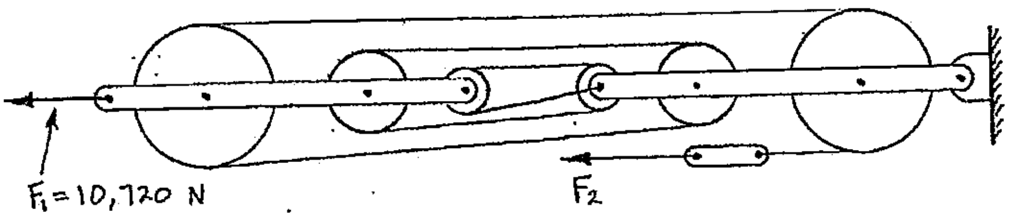

17.2 Block W_1 weighs 8.25-kips, and the coefficient of static friction between block W_1 and the incline is 0.18. Determine the minimum weight of block W_2 that is required to maintain static equilibrium.

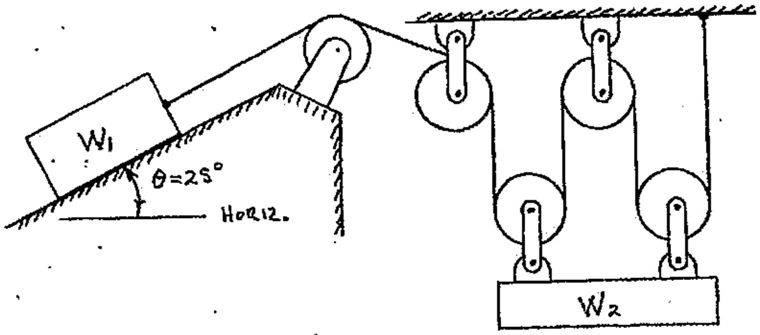

17.3 The pulley system shown below is in static equilibrium due to force F. The weight W = 9820-lb. Determine the force acting on the short link at pin B.

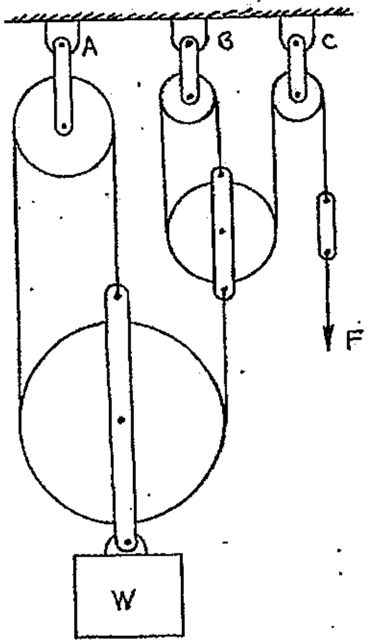

PRACTICE PROBLEMS

17.4 The block has a weight of W = 460-lb, and the coefficient of static friction between the block and the horizontal surface is 0.21. Determine the maximum possible value of force F if the system must remain in static equilibrium.

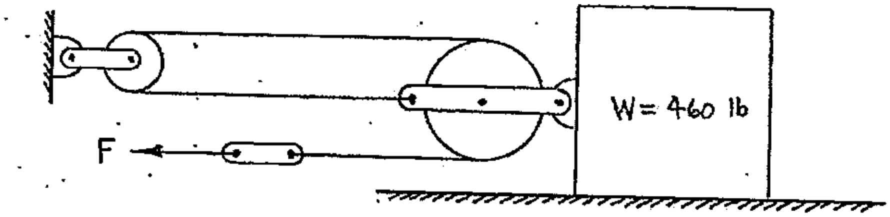

17.5 The pulley system shown below is in static equilibrium. W_1 = 264.8-lb. Determine the required weight of W_2.

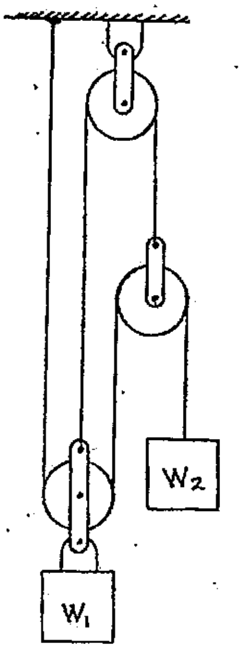

FURTHER EXAMPLE PROBLEMS (solutions in GFSA format are on the following pages)

Example 17-2: Determine the maximum weight of load W_2 for which the system shown below will remain in static equilibrium. The coefficient of static friction is 0.22 between W_1 and the horizontal surface.

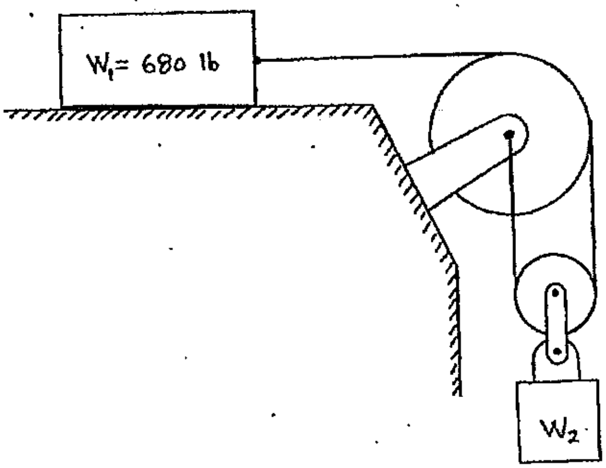

Example 17-3: Determine the magnitude of force F required to maintain static equilibrium of the pulley system shown below.

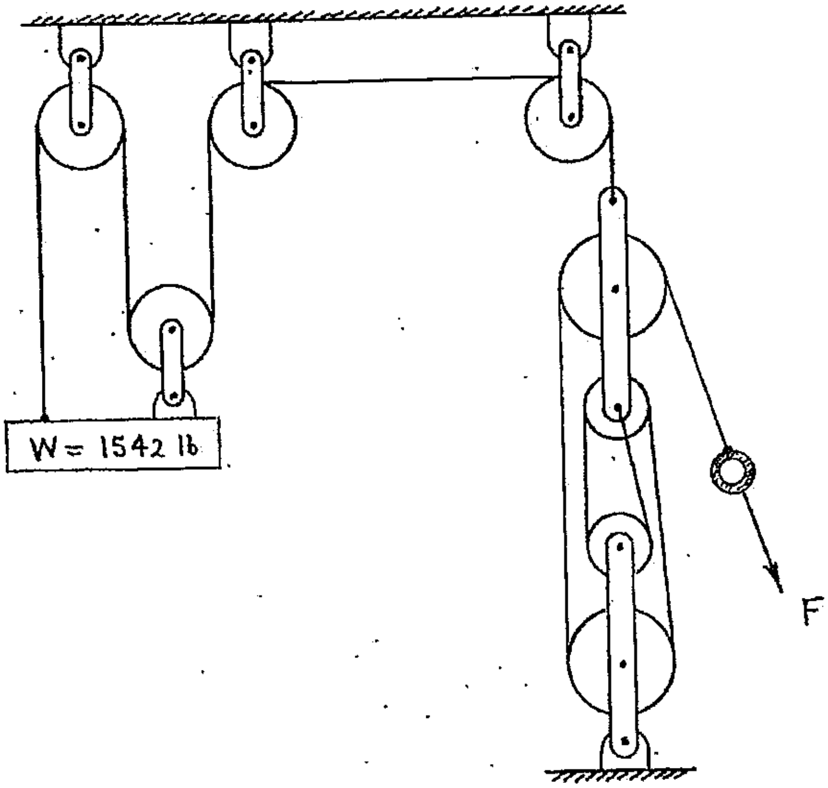

PROBLEM: EXAMPLE 17-2

GIVEN: THE SYSTEM SHOWN BELOW. THE COEFFICIENT OF STATIC FRICTION IS 0.22 BETWEEN W_1 AND THE HORIZONTAL SURFACE.

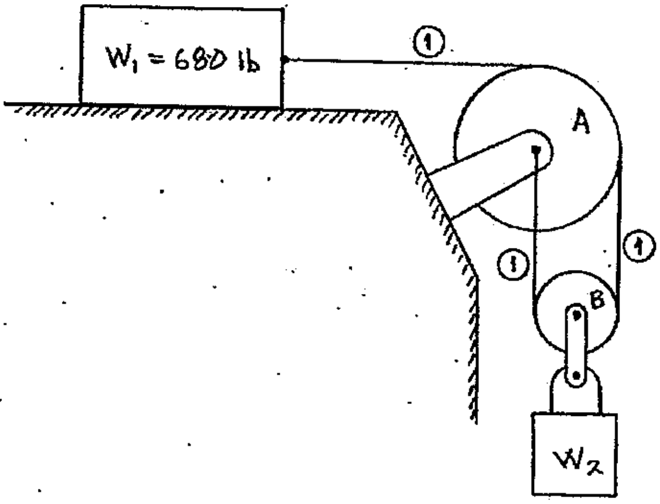

FIND: DETERMINE THE MAXIMUM WEIGHT OF LOAD W_2 FOR WHICH THE SYSTEM SHOWN ABOVE WILL REMAIN IN STATIC EQUILIBRIUM.

SOLUTION:

FBD OF WEIGHT W_1: (IMPENDING SLIDING TO THE RIGHT)

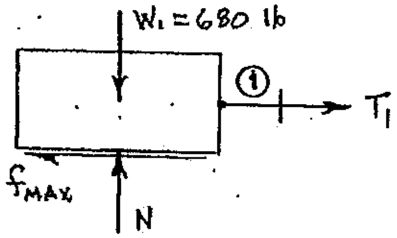

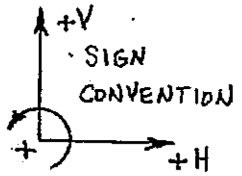

DETERMINE NORMAL FORCE, N:

$\Sigma F_V = 0$

$0 = \pm N \pm W_1$

$0 = +N - W_1$

$N = +W_1$

$N = +680 \text{ lb}$

$N = \underline{680 \text{ lb}} \uparrow$

CONT'D.

PROBLEM: EXAMPLE 17-2 (CONT'D.)

DETERMINE TENSION IN CABLE 1:

$\Sigma F_H = 0$

$0 = \pm f_{MAX} \pm T_1$

$0 = -f_{MAX} + T_1$

$T_1 = +f_{MAX}$ AND: $f_{MAX} = \mu_S N$ (@ IMPENDING MOTION)

$T_1 = +\mu_S N$ AND: $\mu_S = 0.22$, $N = +680$ lb

$T_1 = +(0.22)(+680 \text{ lb})$

$T_1 = +149.600$ lb

$T_1 = 149.600$ lb (TENSION)

FBD OF PULLEY B AND WEIGHT W_2: (CABLE 1 CUT TWICE)

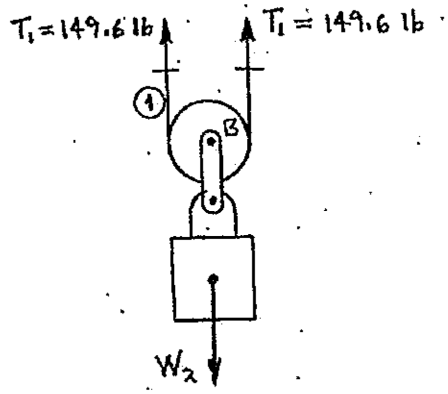

DETERMINE WEIGHT W_1:

$\Sigma F_V = 0$

$0 = \pm T_1 \pm T_1 \pm W_2$

$0 = +T_1 + T_1 - W_2$

$W_2 = +2\,T_1$

$W_2 = +2(+149.6 \text{ lb})$

$W_2 = +299.200$ lb

$W_2 = 299.200$ lb ↓

ANSWER:

$W_2 = 299.2$ lb ↓

PROBLEM: EXAMPLE 17-3

GIVEN: PULLEY SYSTEM SHOWN BELOW.

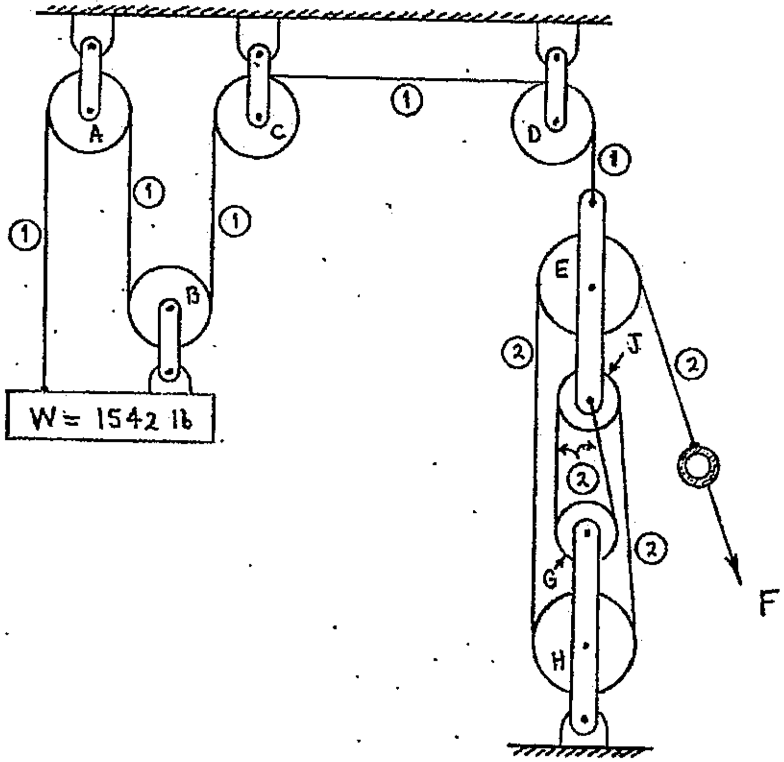

FIND: DETERMINE THE MAGNITUDE OF FORCE F REQUIRE TO MAINTAIN STATIC EQUILIBRIUM.

SOLUTION:

FBD OF WEIGHT AND PULLEY B: (CABLE 1 CUT)

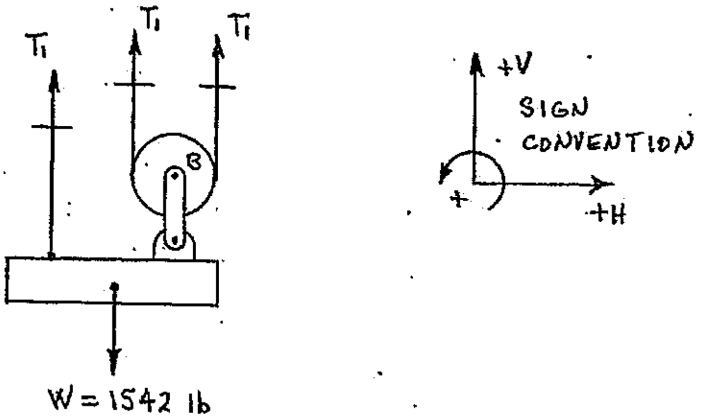

CONT'D.

PROBLEM: EXAMPLE 17-3 (CONT'D.)

DETERMINE TENSION IN CABLE 1: (FROM FBD ON PREVIOUS PAGE)

$\Sigma F_V = 0$

$0 = \pm T_1 \pm T_1 \pm T_1 \pm W$

$0 = +T_1 + T_1 + T_1 - W$

$0 = +3\,T_1 - W$

$T_1 = \dfrac{+W}{3}$

$T_1 = \dfrac{+1542 \text{ lb}}{3}$

$T_1 = +514.000 \text{ lb}$

$T_1 = \underline{514 \text{ lb (TENSION)}}$

FBD OF PULLEYS E AND J: (CUT CABLES 1 AND 2)

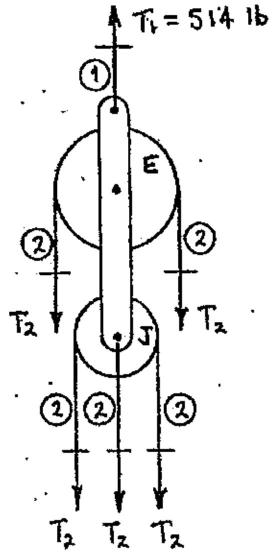

DETERMINE TENSION IN CABLE 2:

$\Sigma F_V = 0$

$0 = \pm T_1 \pm T_2 \pm T_2 \pm T_2 \pm T_2 \pm T_2$

$0 = +T_1 - T_2 - T_2 - T_2 - T_2 - T_2$

$0 = +T_1 - 5T_2$

$T_2 = \dfrac{+T_1}{5}$

$T_2 = \dfrac{+514 \text{ lb}}{5}$

$T_2 = +102.800 \text{ lb}$

$T_2 = \underline{102.8 \text{ lb (TENSION)}}$

CONT'D.

PROBLEM: EXAMPLE 17-3 (CONT'D.)

FBD OF RING WHERE FORCE F IS APPLIED: (CUT CABLE 2)

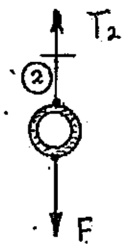

DETERMINE MAGNITUDE OF FORCE F:

$\Sigma F_V = 0$

$0 = \pm T_2 \pm F$

$0 = +T_2 - F$

$F = +T_2$

$F = +102.8 \text{ lb}$

$F = \underline{102.8 \text{ lb} \downarrow}$

ANSWER:

MAGNITUDE OF FORCE F:

$F = 102.8 \text{ lb}$

TABLE A1: COMMON UNIT EQUIVALENCES

Time:
1 sec = 1000 msec
60 sec = 1 min
60 min = 1 hr

Length:
1 in = 2.540 cm = 25.4 mm
1 ft = 0.3048 m = 12 in
1 mi = 5280 ft
1 yd = 3.0 ft = 36 in

Force, Power, Energy, Heat:
1 B (Btu) = 778.17 ft-lbf
1 ft-lbf = 1.35636 J*
1 lbf = 4.44822 N*
1 W = 1 J/sec
1 kW = 1000 W
1 J = 1 N m
1 calorie = 4.184 J

$$1\ \text{N} = \frac{1\ \text{kgm}}{\text{sec}^2}$$

$$1\ \text{hp} = 33{,}000\frac{\text{ft-lbf}}{\text{min}}$$

Pressure:
1 Pa = 1 N/m^2
1 kPa = 1000 Pa

Measure of Angle:
360° = 2 π radians (rad)
360° = 1 revolution (rev)

Volume:
1 l (liter) = 1000 ml (milliliters)
1 gallon (U.S. liquid) = 231 in^3

Area:
1 acre (A) = 43,560 ft^2
1 mi^2 = 640 acre

Weight and Mass: where: lbm = pounds-mass lbf = pounds-force
1 lbm = 453.592 gm*
1 kg = 1000 gm
1 lbf = 453.592 gm-force*
1 ton (f)U.S. = 2000 lbf
1 slug = 32.174 lbm
1 slug = 14.5938 kg

$$1\ \text{slug} = 1\frac{\text{lbf sec}^2}{\text{ft}}$$

1 kip = 1000 lbf
1 lb = 1lbf (for MET 111, lb and lbf are both considered to be pounds-force)

* common approximations

Table B1: Section Properties for American Wide-Flange Steel Beams (W shapes; abridged list) (From: Applied Strength of Materials, F-H Cheng)

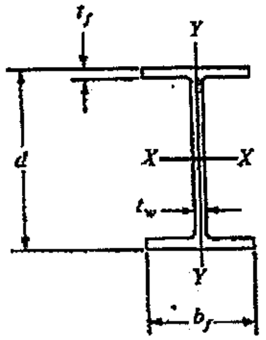

				Flange		Axis X-X			Axis Y-Y		
	Area, A	Depth, d	Web Thickness, t_w	Width, b_f	Thickness t_f	I	S	r	I	s	r
Designation	(in^2)	(in)	(in)	(in)	(in)	(in^4)	(in^3)	(in)	(in^4)	(in^3)	(in)
W36x230	57.6	35.90	0.760	16.470	1.260	15000	837	14.9	940	114	3.73
W36x150	44.2	35.85	0.625	11.975	0.940	9040	504	14.3	270	45.1	2.47
W33x201	59.1	33.68	0.715	15.745	1.150	11500	684	14	749	95.2	3.56
W33x130	38.3	33.09	0.580	11.510	0.855	6710	406	13.2	218	37.9	2.39
W30x173	50.8	30.44	0.655	14.985	1.065	8200	539	12.7	598	79.8	3.43
W30x 108	31.7	29.83	0.545	10.475	0.760	4470	299	11.9	146	27.9	2.15
W27x146	42.9	27.38	0.605	13.985	0.975	5630	411	11.4	443	63.5	3.21
W27x94	27.7	26.92	0.490	9.990	0.745	3270	243	10.9	124	24.8	2.12
W24x131	38.5	24.48	0.505	12.855	0.960	4020	329	10.2	340	53	2.97
W24x104	30.6	24.05	0.500	12.750	0.750	3100	258	10.1	259	40.7	2.91
W24x76	22.4	23.92	0.440	8.990	0.680	2100	176	9.69	82.5	18.4	1.92
W21x111	32.7	21.51	0.550	12.340	0.875	2670	249	9.05	274	44.5	2.9
W21x83	24.3	21.43	0.515	8.355	0.835	1830	171	8.67	81.4	19.5	1.83
W21x62	18.3	20.99	0.400	8.240	0.815	1330	127	8.54	57.5	13.9	1.77
W21x50	14.7	20.83	0.380	6.530	0.535	984	94.5	8.18	24.9	7.64	1.3
W18x97	28.5	18.59	0.535	11.145	0.870	1750	188	7.82	201	35.1	2.65
W18x60	17.6	18.24	0.415	7.555	0.695	984	108	7.47	50.1	13.3	1.69
W18x50	14.7	17.99	0.355	7.495	0.570	800	88.9	7.38	40.1	10.7	1.65
W18x46	13.5	18.06	0.360	6.060	0.605	712	78.8	7.25	22.5	7.43	1.29
W18x35	10.3	17.70	0.300	6.000	0.425	510	57.8	7.04	15.3	5.12	1.22
W16x100	29.4	16.97	0.585	10.425	0.985	1490	175	7.1	186	35.7	2.51
W16x89	25.2	16.75	0.525	10.365	0.875	1300	155	7.05	163	31.4	2.49
W16x57	16.8	16.43	0.430	7.120	0.715	758	92.2	6.72	43.1	12.1	1.6
W16x50	14.7	16.26	0.380	7.070	0.630	659	81	6.68	37.2	10.5	1.59
W16x36	10.6	15.86	0.295	6.985	0.430	448	56.5	6.51	24.5	7	1.52
W16x26	7.68	15.69	0.250	5.500	0.345	301	38.4	6.26	9.59	3.49	1.12
W14x90	26.5	14.02	0.440	14.520	0.710	999	143	6.14	362	49.9	3.7
W14x82	24.1	14.31	0.510	10.130	0.855	882	123	6.05	148	29.3	2.48
W14x74	21.8	14.17	0.450	10.070	0.785	796	112	6.04	134	26.6	2.48
W14x68	20	14.04	0.415	10.036	0.720	723	103	6.01	121	24.2	2.46
W14x61	17.9	13.89	0.375	9.996	0.645	640	92.2	5.98	107	21.5	2.45
W14x53	15.6	13.92	0.370	8.060	0.660	541	77.8	5.89	57.7	14.3	1.92
W14x43	12.6	13.66	0.305	7.995	0.530	428	62.7	5.82	45.2	11.3	1.89
W14x38	11.2	14.10	0.310	6.770	0.515	385	54.6	5.87	26.7	7.88	1.55
W14x34	10	13.98	0.285	6.745	0.455	340	48.6	5.83	23.3	6.91	1.53
W14x30	8.85	13.84	0.270	6.730	0.385	291	42	5.73	19.6	5.82	1.49
W12x87	25.6	12.53	0.515	12.125	0.810	740	118	5.38	241	39.7	3.07
W12x65	19.1	12.12	0.390	12.000	0.605	533	87.9	5.28	174	29.1	3.02
W12x53	15.6	12.06	0.345	9.995	0.575	425	70.6	5.23	95.8	19.2	2.48
W12x40	11.8	11.94	0.295	8.005	0.515	310	51.9	5.13	44.1	11	1.93
W12x35	10.3	12.50	0.300	6.560	0.520	285	45.6	5.25	24.5	7.47	1.54
W12x30	8.79	12.34	0.260	6.520	0.440	238	38.6	5.21	20.3	6.24	1.52

Table B2: Section Properties for American Standard Steel I-Beams (S shapes; abridged list) (From: Applied Strength of Materials, F-H Cheng)

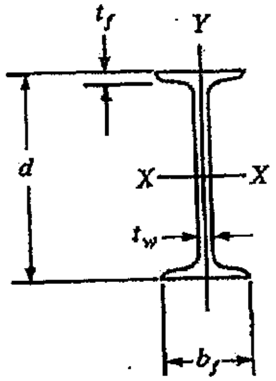

				Flange		Axis X-X			Axis Y-Y		
	Area, A	Depth, d	Web Thickness, t_w	Width, b_f	Thickness t_f	I	S	r	I	S	r
Designation	(in^2)	(in)	(in)	(in)	(in)	(in^4)	(in^3)	(in)	(in^4)	(in^3)	(in)
S24x121	35.6	24.50	0.800	8.050	1.090	3160	258	9.43	83.3	20.7	1.53
S24x106	31.2	24.50	0.620	7.870	1.090	2940	240	9.71	77.1	19.6	1.57
S24x100	29.3	24.00	0.745	7.245	0.870	2390	199	9.02	47.7	13.2	1.27
S24x90	26.5	24.00	0.625	7.125	0.870	2250	187	9.21	44.9	12.6	1.3
S24x80	23.5	24.00	0.500	7.000	0.870	2100	175	9.47	42.2	12.1	1.34
S20x96	28.2	20.30	0.800	7.200	0.920	1670	165	7.71	50.2	13.9	1.33
S20x86	25.3	20.30	0.660	7.060	0.920	1580	155	7.89	46.8	13.3	1.36
S20x75	22	20.00	0.635	6.385	0.795	1280	128	7.62	29.8	9.32	1.16
S20x66	19.4	20.00	0.505	6.255	0.795	1190	119	7.83	27.7	8.85	1.19
S18x70	20.6	18.00	0.711	6.251	0.691	926	103	6.71	24.1	7.72	1.08
S18x54.7	16.1	18.00	0.461	6.001	0.691	804	89.4	7.07	20.8	6.94	1.14
S15x50	14.7	15.00	0.550	5.640	0.622	486	64.8	5.75	15.7	5.57	1.03
S15x42.9	12.6	15.00	0.411	5.501	0.622	447	59.6	5.95	14.4	5.23	1.07
S12x50	14.7	12.00	0.687	5.477	0.659	305	50.8	4.55	15.7	5.74	1.03
S12x40.8	12	12.00	0.462	5.252	0.659	272	45.4	4.77	13.6	5.16	1.06
S12x35	10.3	12.00	0.428	5.078	0.544	229	38.2	4.72	9.87	3.89	0.98
S12x31.8	9.35	12.00	0.350	5.000	0.544	218	36.4	4.83	9.36	3.74	1
S10x35	10.3	10.00	0.594	4.944	0.491	147	29.4	3.78	8.36	3.38	0.901
S10x25.4	7.46	10.00	0.311	4.661	0.491	124	24.7	4.07	6.79	2.91	0.954
S8x23	6.77	8.00	0.441	4.171	0.426	64.9	16.2	3.1	4.31	2.07	0.798
S8x18.4	5.41	8.00	0.271	4.001	0.426	57.6	14.4	3.26	3.73	1.86	0.831
S7x20	5.88	7.00	0.450	3.860	0.392	42.4	12.1	2.69	3.17	1.64	0.734
S7x15.3	4.5	7.00	0.252	3.662	0.392	36.7	10.5	2.86	2.64	1.44	0.766
S6x17.25	5.07	6.00	0.465	3.565	0.359	26.3	8.77	2.28	2.31	1.3	0.675
S6x12.5	3.67	6.00	0.232	3.332	0.359	22.1	7.37	2.45	1.82	1.09	0.705
S5x14.75	4.34	5.00	0.494	3.284	0.326	15.2	6.09	1.87	1.67	1.01	0.62
S5x10	2.94	5.00	0.214	3.004	0.326	12.3	4.92	2.05	1.22	0.809	0.643
S4x9.5	2.79	4.00	0.326	2.796	0.293	6.08	3.04	1.56	0.903	0.646	0.569
S4x7.7	2.26	4.00	0.193	2.663	0.293	5.79	2.9	1.64	0.764	0.574	0.581
S3x7.5	2.21	3.00	0.349	2.509	0.260	2.93	1.95	1.15	0.586	0.468	0.516
S3x5.7	1.67	3.00	0.170	2.330	0.260	2.52	1.68	1.23	0.455	0.39	0.522

Table B3: Section Properties for American Standard Steel Channels (C shapes; abridged list) (From: Applied Strength of Materials, F-H Cheng)

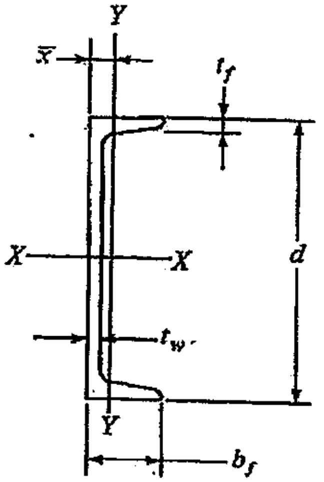

Designation	Area, A	Depth, d	Web Thickness, t_w	Flange Width, b_f	Flange Average Thickness, t_f	Axis X-X I	Axis X-X S	Axis X-X r	Axis Y-Y I	Axis Y-Y S	Axis Y-Y r	$\bar{x}$
	(in^2)	(in)	(in)	(in)	(in)	(in^4)	(in^3)	(in)	(in^4)	(in^3)	(in)	(in)
C15x50	14.70	15.00	0.716	3.716	0.650	404	53.8	5.24	11.0	3.78	0.867	0.798
C15x40	11.80	15.00	0.520	3.520	0.650	349	46.5	5.44	9.23	3.37	0.886	0.777
C15x33.9	9.96	15.00	0.400	3.400	0.650	315	42.0	5.62	8.13	3.11	0.904	0.787
C12x30	8.82	12.00	0.510	3.170	0.501	162	27.0	4.29	5.14	2.06	0.763	0.674
C12x25	7.35	12.00	0.387	3.047	0.501	144	24.1	4.43	4.47	1.88	0.780	0.674
C12x20.7	6.09	12.00	0.282	2.942	0.501	129	21.5	4.61	3.88	1.73	0.799	0.698
C10x30	8.82	10.00	0.673	3.033	0.436	103	20.7	3.42	3.94	1.65	0.669	0.649
C10x25	7.35	10.00	0.526	2.886	0.436	91.2	18.2	3.52	3.36	1.48	0.676	0.617
C10x20	5.88	10.00	0.379	2.739	0.436	78.9	15.8	3.66	2.81	1.32	0.692	0.606
C10x15.3	4.49	10.00	0.240	2.600	0.436	67.4	13.5	3.87	2.28	1.16	0.713	0.634
C9x20	5.88	9.00	0.448	2.648	0.413	60.9	13.5	3.22	2.42	1.17	0.642	0.583
C9x15	4.41	9.00	0.285	2.485	0.413	51.0	11.3	3.40	1.93	1.01	0.681	0.586
C9x13.4	3.94	9.00	0.233	2.433	0.413	47.9	10.6	3.48	1.76	0.962	0.669	0.601
C8x18.75	5.51	8.00	0.487	2.527	0.390	44.0	11.0	2.82	1.98	1.01	0.599	0.565
C8x13.75	4.04	8.00	0.303	2.343	0.390	36.1	9.03	2.99	1.53	0.854	0.615	0.553
C8x11.5	3.38	8.00	0.220	2.260	0.390	32.6	8.14	3.11	1.32	0.781	0.625	0.571
C7x14.75	4.33	7.00	0.419	2.299	0.366	27.2	7.78	2.51	1.38	0.779	0.564	0.532
C7x12.25	3.60	7.00	0.314	2.194	0.366	24.2	6.93	2.60	1.17	0.703	0.571	0.525
C7x9.8	2.87	7.00	0.210	2.090	0.366	21.3	6.08	2.72	0.968	0.625	0.581	0.540
C6x13	3.83	6.00	0.437	2.157	0.343	17.4	5.80	2.13	1.05	0.642	0.525	0.514
C6x10.5	3.09	6.00	0.314	2.034	0.343	15.2	5.06	2.22	0.866	0.564	0.529	0.499
C6x8.2	2.40	6.00	0.200	1.920	0.343	13.1	4.38	2.34	0.693	0.492	0.537	0.511
C5x9	2.64	5.00	0.325	1.885	0.320	8.90	3.56	1.83	0.632	0.450	0.489	0.478
C5x6.7	1.97	5.00	0.190	1.750	0.320	7.49	3.00	1.95	0.479	0.378	0.493	0.484
C4x7.25	2.13	4.00	0.321	1.721	0.296	4.59	2.29	1.47	0.433	0.343	0.450	0.459
C4x5.4	1.59	4.00	0.184	1.584	0.296	3.85	1.93	1.56	0.319	0.283	0.449	0.457
C3x6	1.76	3.00	0.356	1.596	0.273	2.07	1.38	1.08	0.305	0.268	0.416	0.455
C3x5	1.47	3.00	0.258	1.498	0.273	1.85	1.24	1.12	0.247	0.233	0.410	0.438
C3x4.1	1.21	3.00	0.170	1.410	0.273	1.66	1.10	1.17	0.197	0.202	0.404	0.044

Table B4: Section Properties of Angles, Equal legs and unequal legs (abridged list)
(From the AISC Manual of Steel Construction)

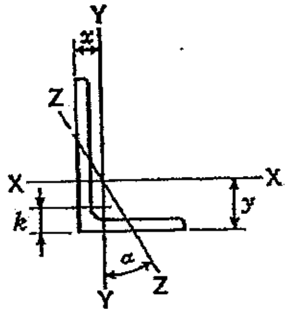

Size and Thickness (in)	k (in)	Weight per Foot (lbs)	Area (in^2)	Axis X-X I_X (in^4)	Axis X-X S_X (in^3)	Axis X-X r_X (in)	Axis X-X y (in)	Axis Y-Y I_Y (in^4)	Axis Y-Y S_Y (in^3)	Axis Y-Y r_Y (in)	Axis Y-Y x (in)	Axis Z-Z r_Z (in)	Axis Z-Z Tan α
L 8 x 8 x 1	1⅝	51.0	15.0	89.0	15.8	2.44	2.37	89.0	15.8	2.44	2.37	1.56	1.00
¾	1⅜	38.9	11.4	69.7	12.2	2.47	2.28	69.7	12.2	2.47	2.28	1.58	1.00
½	1⅛	26.4	7.75	48.6	8.36	2.50	2.19	48.6	8.36	2.50	2.19	1.59	1.00
L 8 x 6 x 1	1½	44.2	13.0	80.8	15.1	2.49	2.65	38.8	8.92	1.73	1.65	1.28	0.543
¾	1¼	33.8	9.94	63.4	11.7	2.53	2.56	30.7	6.92	1.76	1.56	1.29	0.551
½	1	23.0	6.75	44.3	8.02	2.56	2.47	21.7	4.79	1.79	1.47	1.30	0.558
L 8 x 4 x 1	1½	37.4	11.0	69.6	14.1	2.52	3.05	11.6	3.94	1.03	1.05	0.846	0.247
¾	1¼	28.7	8.44	54.9	10.9	2.55	2.95	9.36	3.07	1.05	0.953	0.852	0.258
½	1	19.6	5.75	38.5	7.49	2.59	2.86	6.74	2.15	1.08	0.859	0.865	0.267
L 6 x 6 x ½	1	19.6	5.75	19.9	4.61	1.86	1.68	19.9	4.61	1.86	1.68	1.18	1.00
⅜	⅞	14.9	4.36	15.4	3.53	1.88	1.64	15.4	3.53	1.88	1.64	1.19	1.00
L 6 x 4 x ½	1	16.2	4.75	17.4	4.33	1.91	1.99	6.27	2.08	1.15	0.987	0.870	0.440
⅜	⅞	12.3	3.61	13.5	3.32	1.93	1.94	4.90	1.60	1.17	0.941	0.877	0.446
L 5 x 5 x ½	1	16.2	4.75	11.3	3.16	1.54	1.43	11.3	3.16	1.54	1.43	0.983	1.00
⅜	⅞	12.3	3.61	8.74	2.42	1.56	1.39	8.74	2.42	1.56	1.39	0.990	1.00
L 5 x 3 x ½	1	12.8	3.75	9.45	2.91	1.59	1.75	2.58	1.15	0.829	0.750	0.648	0.357
⅜	⅞	9.8	2.86	7.37	2.24	1.61	1.70	2.04	0.888	0.845	0.704	0.654	0.364
L 4 x 4 x ½	⅞	12.8	3.75	5.56	1.97	1.22	1.18	5.56	1.97	1.22	1.18	0.782	1.00
⅜	¾	9.8	2.86	4.36	1.52	1.23	1.14	4.36	1.52	1.23	1.14	0.788	1.00
¼	⅝	6.6	1.94	3.04	1.05	1.25	1.09	3.04	1.05	1.25	1.09	0.795	1.00
L 4 x 3 x ½	15/16	11.1	3.25	5.05	1.89	1.25	1.33	2.42	1.12	0.864	0.827	0.639	0.543
⅜	13/16	8.5	2.28	3.96	1.46	1.26	1.28	1.92	0.866	0.879	0.782	0.644	0.551
¼	11/16	5.8	1.69	2.77	1.00	1.28	1.24	1.36	0.599	0.896	0.736	0.651	0.558
L 3 x 3 x ½	13/16	9.4	2.75	2.22	1.07	0.898	0.932	2.22	1.07	0.898	0.932	0.584	1.00
⅜	11/16	7.2	2.11	1.76	0.833	0.913	0.888	1.76	0.833	0.913	0.888	0.587	1.00
¼	9/16	4.9	1.44	1.24	0.577	0.930	0.842	1.24	0.577	0.930	0.842	0.592	1.00
L 3 x 2 x ⅜	11/16	5.9	1.73	1.53	0.781	0.940	1.04	0.543	0.371	0.559	0.539	0.430	0.428
¼	9/16	4.1	1.19	1.09	0.542	0.957	0.993	0.392	0.260	0.574	0.493	0.435	0.440
L 2 x 2 x ⅜	11/16	4.7	1.36	0.479	0.351	0.594	0.636	0.479	0.351	0.594	0.636	0.389	1.00
¼	9/16	3.19	0.938	0.348	0.247	0.609	0.592	0.348	0.247	0.609	0.592	0.391	1.00
⅛	7/16	1.65	0.484	0.190	0.131	0.626	0.546	0.190	0.131	0.626	0.546	0.398	1.00

Table B5: Section Properties for Steel Pipe
(From: AISC Manual of Steel Construction)

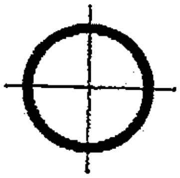

Nominal Diameter (in)	Dimensions: Outside Diameter (in)	Inside Diameter (in)	Wall Thickness (in)	Weight per Foot (lbs)	Properties: A (in^2)	I (in^4)	S (in^3)	r (in)
				Standard Weight				
½	0.840	0.622	0.109	0.85	0.250	0.017	0.041	0.261
¾	1.050	0.824	0.113	1.13	0.333	0.037	0.071	0.334
1	1.315	1.049	0.133	1.68	0.494	0.087	0.133	0.421
1 ¼	1.660	1.380	0.140	2.27	0.699	0.195	0.235	0.540
1 ½	1.900	1.610	0.145	2.72	0.799	0.310	0.326	0.623
2	2.375	2.067	0.154	3.65	1.07	0.666	0.561	0.787
2 ½	2.875	2.469	0.203	5.79	1.70	1.53	1.06	0.947
3	3.500	3.068	0.216	7.58	2.23	3.02	1.72	1.61
3 ½	4.000	3.548	0.226	9.11	2.68	4.79	2.39	1.34
4	4.500	4.026	0.237	10.79	3.17	7.23	3.21	1.51
5	5.563	5.047	0.258	14.62	4.30	15.2	5.45	1.88
6	6.625	6.065	0.280	18.97	5.58	28.1	8.50	2.25
8	8.625	7.981	0.322	28.55	8.40	72.7	16.8	2.94
10	10.750	10.020	0.365	40.48	11.9	161	29.9	3.67
12	12.750	12.000	0.375	49.56	14.6	279	43.8	4.38
				Extra Strong				
½	0.840	0.546	0.147	1.09	0.320	0.020	0.048	0.250
¾	1.050	0.742	0.154	1.47	0.433	0.045	0.085	0.321
1	1.315	0.957	0.179	2.17	0.639	0.106	0.161	0.407
1 ¼	1.660	1.278	0.191	3.00	0.881	0.242	0.291	0.524
1 ½	1.900	1.500	0.200	3.63	1.07	0.391	0.412	0.605
2	2.375	1.939	0.218	5.02	1.48	0.868	0.731	0.766
2 ½	2.875	2.323	0.276	7.66	2.25	1.92	1.34	0.924
3	3.500	2.900	0.300	10.25	3.02	3.89	2.23	1.14
3 ½	4.000	3.364	0.318	12.50	3.68	6.28	3.14	1.31
4	4.500	3.826	0.337	14.98	4.41	9.61	4.27	1.48
5	5.563	4.813	0.375	20.78	6.11	20.7	7.43	1.84
6	6.625	5.761	0.432	28.57	8.40	40.5	12.2	2.19
8	8.625	7.625	0.500	43.39	12.8	106	24.5	2.88
10	10.750	9.750	0.500	54.74	16.1	212	39.4	3.63
12	12.750	11.750	0.500	65.42	19.2	362	56.7	4.33
				Double-Extra Strong				
2	2.375	1.503	0.436	9.03	2.66	1.31	1.10	0.703
2 ½	2.875	1.771	0.552	13.69	4.03	2.87	2.00	0.844
3	3.500	2.300	0.600	18.58	5.47	5.99	3.42	1.05
4	4.500	3.152	0.674	27.54	8.10	15.3	6.79	1.37
5	5.563	4.063	0.750	38.55	11.3	33.6	12.1	1.72
6	6.625	4.897	0.864	53.16	15.6	66.3	20.0	2.06
8	8.625	6.875	0.875	72.42	21.3	162	37.6	2.76

Table B6: Section Properties for Square Structural Tubing (abridged list)
(From AISC Manual of Steel Construction)

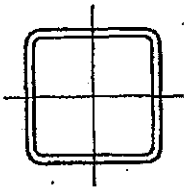

Dimensions			Properties**			
Nominal* Size (in)	Wall Thickness (in)	Weight per Foot (lbs)	Area (in^2)	I (in^4)	S (in^3)	r (in)
10 x 10	0.6250	76.33	22.4	321	64.2	3.78
	0.5000	62.43	18.4	271	54.2	3.84
	0.3750	47.90	14.1	214	42.9	3.90
	0.3125	40.35	11.9	183	36.7	3.93
	0.2500	32.63	9.59	151	30.1	3.96
8 x 8	0.6250	59.32	17.4	153	38.3	2.96
	0.5000	48.85	14.4	131	32.9	3.03
	0.3750	37.69	11.1	106	26.4	3.09
	0.3125	31.84	9.36	90.9	22.7	3.12
	0.2500	25.82	7.59	75.1	18.8	3.15
	0.1875	19.63	5.77	58.2	14.6	3.18
7 x 7	0.5000	42.05	12.4	84.6	24.2	2.62
	0.3750	32.58	9.58	68.7	19.6	2.68
	0.3125	27.59	8.11	59.5	17.0	2.71
	0.2500	22.42	6.59	49.4	14.1	2.74
	0.1875	17.08	5.02	38.5	11.0	2.77
6 x 6	0.5000	35.24	10.4	50.5	16.8	2.21
	0.3750	27.48	8.08	41.6	13.9	2.27
	0.3125	23.34	6.86	36.3	12.1	2.30
	0.2500	19.02	5.59	30.3	10.1	2.33
	0.1875	14.53	4.27	23.8	7.93	2.36
5 x 5	0.5000	28.43	8.36	27.0	10.8	1.80
	0.3750	22.37	6.58	22.8	9.11	1.86
	0.3125	19.08	5.61	20.1	8.02	1.89
	0.2500	15.62	4.59	16.9	6.78	1.92
	0.1875	11.97	3.52	13.4	5.36	1.95
4 x 4	0.5000	21.63	6.36	12.3	6.13	1.39
	0.3750	17.27	5.08	10.7	5.35	1.45
	0.3125	14.83	4.36	9.58	4.79	1.48
	0.2500	12.21	3.59	8.22	4.11	1.51
	0.1875	9.42	2.77	6.59	3.30	1.54
3.5 x 3.5	0.3125	12.70	3.73	6.09	3.48	1.28
	0.2500	10.51	3.09	5.29	3.02	1.31
	0.1875	8.15	2.39	4.29	2.45	1.34
3 x 3	0.3125	10.58	3.11	3.58	2.39	1.07
	0.2500	8.81	2.59	3.16	2.10	1.10
	0.1875	6.87	2.02	2.60	1.73	1.13
2.5 x 2.5	0.2500	7.11	2.09	1.69	1.35	0.899
	0.1875	5.59	1.64	1.42	1.14	0.930
2 x 2	0.2500	5.41	1.59	0.766	0.766	0.694
	0.1875	4.32	1.27	0.668	0.668	0.726

* Outside dimensions are across flat sides.
** Properties are based on a nominal outside corner radius equal to two times the wall thickness.

Table B7: Section Properties of Rectangular Structural Tubing (abridged list) (From AISC Manual of Steel Construction)

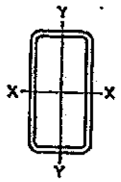

Dimensions			Properties**						
				X-X Axis			Y-Y Axis		
Nominal* Size (in)	Wall Thickness (in)	Weight per Foot (lbs)	Area (in^2)	I_X (in^4)	S_X (in^3)	r_X (in)	I_Y (in^4)	S_Y (in^3)	r_Y (in)
8 x 4	0.5000	35.24	10.4	75.1	18.8	2.69	24.6	12.3	1.54
	0.3750	27.48	8.08	61.9	15.5	2.77	20.6	10.3	1.60
	0.3125	23.34	6.86	53.9	13.5	2.80	18.1	9.05	1.62
	0.2500	19.02	5.59	45.1	11.3	2.84	15.3	7.63	1.65
	0.1875	14.53	4.27	35.3	8.83	2.88	12.0	6.02	1.68
8 x 3	0.3750	24.93	7.33	51.0	12.7	2.64	10.4	6.92	1.19
	0.3125	21.21	6.23	44.7	11.2	2.68	9.25	6.16	1.22
	0.2500	17.32	5.09	37.6	9.40	2.72	7.90	5.26	1.25
	0.1875	13.25	3.89	29.6	7.40	2.76	6.31	4.21	1.27
8 x 2	0.3750	22.37	6.58	40.1	10.0	2.47	3.85	3.85	0.765
	0.3125	19.08	5.61	35.5	8.87	2.51	3.52	3.52	0.792
	0.2500	15.62	4.59	30.1	7.52	2.56	3.08	3.08	0.819
	0.1875	11.97	3.52	23.9	5.97	2.60	2.52	2.52	0.847
6 x 4	0.5000	28.43	8.36	35.3	11.8	2.06	18.4	9.21	1.48
	0.3750	22.37	6.58	29.7	9.90	2.13	15.6	7.82	1.54
	0.3125	19.08	5.61	26.2	8.72	2.16	13.8	6.92	1.57
	0.2500	15.62	4.59	22.1	7.36	2.19	11.7	5.87	1.60
	0.1875	11.97	3.52	17.4	5.81	2.23	9.32	4.66	1.63
6 x 3	0.3750	19.82	5.83	23.8	7.92	2.02	7.78	5.19	1.16
	0.3125	16.96	4.98	21.1	7.03	2.06	6.98	4.65	1.18
	0.2500	13.91	4.09	17.9	5.98	2.09	6.00	4.00	1.21
	0.1875	10.70	3.14	14.3	4.76	2.13	4.83	3.22	1.24
6 x 2	0.3750	17.27	5.08	17.8	5.94	1.87	2.84	2.84	0.748
	0.3125	14.83	4.36	16.0	5.34	1.92	2.62	2.62	0.775
	0.2500	12.21	3.59	13.8	4.60	1.96	2.31	2.31	0.802
	0.1875	9.42	2.77	11.1	3.70	2.00	1.90	1.90	0.829
5 x 3	0.5000	21.63	6.36	16.9	6.75	1.63	7.33	4.88	1.07
	0.3750	17.27	5.08	14.7	5.89	1.70	6.48	4.32	1.13
	0.3125	14.83	4.36	13.2	5.27	1.74	5.85	3.90	1.16
	0.2500	12.21	3.59	11.3	4.52	1.77	5.05	3.37	1.19
	0.1875	9.42	2.77	9.06	3.62	1.81	4.08	2.72	1.21
5 x 2	0.3125	12.70	3.73	9.74	3.90	1.62	2.16	2.16	0.76
	0.2500	10.51	3.09	8.48	3.39	1.66	1.92	1.92	0.78
	0.1875	8.15	2.39	6.89	2.75	1.70	1.60	1.60	0.81
4 x 3	0.3125	12.70	3.73	7.45	3.72	1.41	4.71	3.14	1.12
	0.2500	10.51	3.09	6.45	3.23	1.45	4.10	2.74	1.15
	0.1875	8.15	2.39	5.23	2.62	1.48	3.34	2.23	1.18
4 x 2	0.3125	10.58	3.11	5.32	2.66	1.31	1.71	1.71	0.743
	0.2500	8.81	2.59	4.69	2.35	1.35	1.54	1.54	0.770
	0.1875	6.87	2.02	3.87	1.93	1.38	1.29	1.29	0.798
3 x 2	0.2500	7.11	2.09	2.21	1.47	1.03	1.15	1.15	0.742
	0.1875	5.59	1.64	1.86	1.24	1.06	0.977	0.977	0.771

* Outside dimensions are measured across the flat sides.

** Properties are based on a nominal outside radius equal to two times the wall thickness.